G series
Imperial units

Helical and bevel helical gear reducers and gearmotors

Contents

Rossi for you 6
Features and benefits 8
Symbols and units of measure 10

G 40...360

1 – General specifications sizes 40 ... 360 11
2 – Designation 19
3 – Service factor fs 23
4 – Thermal power Pt [hp] 27
5 – Selection 31
6 – Structural and operational details 37
7 – Helical gear reducer selection tables 49
8 – Dimensions, designs, mounting positions of helical gear reducers 109
9 – Bevel helical gear reducer selection tables 129
10 – Dimensions, designs, mounting positions of bevel helical gear reducers 197
11 – Helical gearmotor selection tables 209
12 – Dimensions, designs, mounting positions of helical gearmotors 227
13 – Bevel helical gearmotor selection tables 255
14 – Dimensions, designs, mounting positions of bevel helical gearmotors 277
15 – Combined gear units 293
16 – Radial loads 297
17 – Accessories and non-standard designs 321
18 – Installation and maintenance 363

G 400 - 401

19 – General specifications sizes 400 - 401 375
20 – Designation 379
21 – Service factor fs 383
22 – Thermal power Pt [hp] 387
23 – Selection 391
24 – Structural and operational details 395
25 – Helical gear reducer selection tables 401
26 – Dimensions, designs, mounting positions of helical gear reducers 403
27 – Bevel helical gear reducer selection tables 411
28 – Dimensions, designs, mounting positions of bevel helical gear reducers 413
29 – Radial loads 419
30 – Accessories and non-standard designs 427
31 – Installation and maintenance 451

32 – Drive units on swing base 459
Technical formulae 475
Global presence local service 476
Index of revisions 478

Rossi for You

Innovation
Rossi offers a wide range of **solutions for an evolving industry**, flexible and innovative gearboxes and gearmotors for customer tailored solutions to maximize performance and minimize the total cost of ownership.

High quality, 3 years warranty
Our drive is to innovate and boost operations by manufacturing performing, precise, reliable and high-quality products all over the world. We are always one step forward in offering and developing solutions that can satisfy an unlimited number of application needs, even in the most demanding conditions.

Reliability
We are a reliable company with the right flexibility and know-how to respond to worldwide market requests, in all application fields, without leaving aside our commitment for the environment and value on human safety, to protect everyone's future.

Tools and processes
We continue to invest in new tools and processes, so our highly skilled specialist team in different fields are supporting you to find the best solution suitable for your demands, always by your side on every step of the project.

After-sale service
Highly trained mechanics and support teams can ensure a fast and efficient after-sale service providing support worldwide.

Digital support
Alongside our 24/7 **Rossi for You** support portal you have a suite of digital support tools enabling real time access to your order tracking, invoices, spare part tables download and contact to our service.

70 years

Experience
Shaped by more than 70 years of history Rossi meets your unique needs whether you need a standard design or a customized solution.

Rossi

Features and benefits

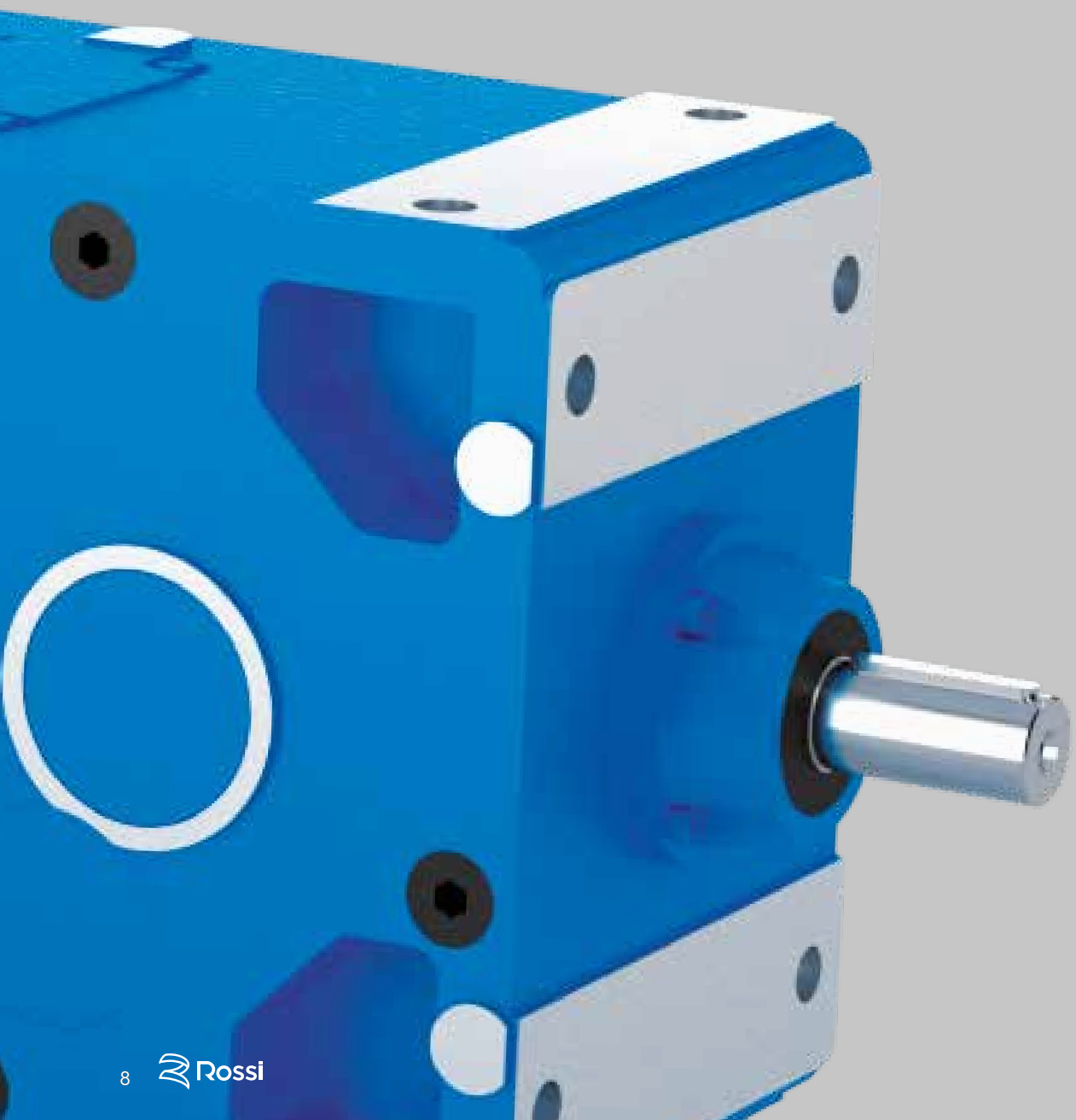

Maximum performance

We drive the heaviest applications worldwide

Sustainability

We care about environment

Modular system

For cost–effective and high quality solutions

Innovation

We are constantly thinking forward, solutions for an evolving industry

Digitalization

Rossi for You is always at your disposal for any info

Know-how

We support you through interdisciplinary know-how

Customization

Cost-effective solutions starting from standard products

Symbols and units of measure

All dimensions in the catalog are expressed in mm except where otherwise stated

Symbol	Description	Unit
f	frequency	Hz
F	force	lb
F_r, F_a	radial (overhung) loads, axial (thrust) loads	lb
fs	service factor	–
ft	thermal factor	–
G	weight (weight force)	lb
i	transmission ratio	–
i_N	nominal transmission ratio	–
L_h	total duration of load cycle	h
L_{WA}	sound power level	dB(A)
m	mass	lb
M_b	bending moment	lb in
n	angular speed	rpm
n_1	gear reducer input speed (high speed)	rpm
n_2	gear reducer output speed (low speed)	rpm
n_{2eq}	load cycle equivalent speed	rpm
n_{N2}	gear reducer nominal output speed	rpm
n_{2i}	gear reducer output speed during load cycle interval i	rpm
P	power	hp
P_1	gear reducer input power (high speed shaft), motor power	hp
P_2	gear reducer output power (low speed shaft)	hp
P_{N2}	gear reducer nominal output power (low speed shaft)	hp
Pt	thermal power	hp
Pt_N	gear reducer nominal thermal power	hp
P_{1th}	gear reducer equivalent thermal power	hp
T	torque	lb in

Symbol	Description	Unit
T_2	gear reducer output torque (low speed shaft), derived from input power and speed	lb in
T_{2eq}	load cycle equivalent torque	lb in
T_{N2}	gear reducer nominal output torque (low speed shaft)	lb in
T_{2i}	gear reducer output torque (low speed shaft), during load cycle interval i	lb in
T_S	screw tightening torque	N m
T_{start}	motor starting torque	lb in
T_{brake}	motor braking torque	lb in
$T_{ambient}$	ambient temperature	°F
T_{oil}	oil temperature	°F
t	time	s
ta	starting time	s
tb	braking time	s
U	voltage	V
W	work, energy	10^6 lb in
WK	moment of inertia	lb ft^2
WK_0^2	moment of inertia (of mass) of the motor	lb ft^2
WK_1^2	moment of inertia (of mass) of the gear reducer referred to high speed shaft	lb ft^2
WK_R^2	external (gear reducer, coupling, driven machine) moment of inertia (of mass) referred to to high speed shaft	lb ft^2
z	starting frequency	starts/h
z_0	no load starting frequency	starts/h
α	angular acceleration	rad/s^2
η	efficiency	–
φ	plane angle	rad
φa_1	revolution of motor shaft during acceleration	rad
φb_1	revolution of motor shaft during deceleration	rad
ω	agular velocity	rad/s

Additional indexes (subscripts) and other symbols

Index	Description
N	nominal
1	relating to high speed shaft (input)
2	relating to low speed shaft (input)
max	maximum
min	minimum
eq	equivalent

Index	Description
th	thermal
c	cycle
–	from ... to
≈	approximately equal to
≥	greater than or equal to
≤	less than or equal to

Unit conversion table

Description	Imperial units				International System of Units (SI), Technical System (metric)		
Length, Distance	1	inch	[in]	=	0.0254	meter	[m]
	1	foot	[ft]	=	0.3048		
Mass	1	pound	[lb]	=	0.4536	kilogram	[kg]
	1	ounce	[oz]	=	0.0283		
Volume	1	US liquid gallon	[gal]	=	3.7854	liter	[l]
Temperature	1	Fahrenheit degree	[°F]	=	1.8 · °C + 32	Celsius degree	[°C]
Force	1	pound-force	[lb$_{(f)}$]	=	4.4482	newton	[N]
				=	0.4536	kilogram force	[kg$_{(f)}$]
Power	1	horse power	[hp]	=	0.7457	kilowatt	[kW]
Torque, Work	1	pound-force inch	[lb$_{(f)}$ in]	=	0.1130	newton meter, joule	[N m], [J]
				=	0.0115	kilogram-force meter	[kg$_{(f)}$ m]
	1	pound-force foot	[lb$_{(f)}$ ft]	=	1.3560	newton meter, joule	[N m], [J]
				=	0.1383	kilogram-force meter	[kg$_{(f)}$ m]
Pressure	1	pound-force per square inch (psi)	[lb$_{(f)}$/in^2]	=	0.0689	bar	[bar]
Moment of inertia	1	WK^2	[lb$_{(f)}$ ft^2]	=	0.0421	kilogram square-meter	[kg m^2]

G series 40 ... 360

Section contents

1 – General specificationsi sizes 40 ... 360 12

2 – Designation 19

3 – Service factor fs 23

4 – Thermal power Pt [hp] 27

5 – Selection 31

6 – Structural and operational details 37

7 – Helical gear reducer selection tables 49

8 – Dimensions, designs, mounting positions of helical gear reducers 109

9 – Bevel helical gear reducer selection tables 129

10 – Dimensions, designs, mounting positions of bevel helical gear reducers 197

11 – Helical gearmotor selection tables 209

12 – Dimensions, designs, mounting positions of helical gearmotors 227

13 – Helical gearmotor selection tables 255

14 – Dimensions, designs, mounting positions of bevel helical gearmotors 277

15 – Combined gear units 293

16 – Radial loads 297

17 – Accessories and non-standard designs 321

18 – Installation and maintenance 363

1 - General specifications

Universal «symmetrical» mounting: **suitable for horizontal or vertical mounting**

Rigid and precise cast iron single-piece housing; **high oil capacity**

Standard hollow low speed shaft, **prearranged for installation of backstop device**, **option of double extension high speed shaft**

Possibility of fitting particularly powerful motors and capability of withstanding high loads on the shaft end

Possibility of obtaining multiple drivers without restrictions on direction of rotation

Intermediate sizes 140, **180**, **225**, **280**, **360** – dimensions similar to previous sizes 125, 160, 200, 250, 320 – **conceived to be also a supporting series in particular applications; three size pairs**, standard and strengthened, **63** and **64**, **80** and **81**, **320** and **321**

Manufacturing and product management flexibility

High manufacturing quality standards

Minimum maintenance requirements

IEC motor

High, reliable and tested performance

Wide range of sizes, trains of gears and solutions.

"Long" series of helical gear reducers and gearmotors for applications with U position of motor/machine shaft and considerable distance between input and output shafts; same input and output coupling dimensions, same transmission ratios and performances, same combinations of motors and gear reducers as the standard series (**patent pending**).

This series of gear reducers and gearmotors combines and exalts the traditional qualities of helical and bevel helical gear reducers – **strength**, **accuracy**, and **reliability** – with advantages derived from modern design, manufacturing and operating criteria – **suitability for the heaviest duties**, **universality and ease of application**, **comprehensive size range**, **service**, **economy** – the advantages typically associated with high quality gear reducers produced in large series.

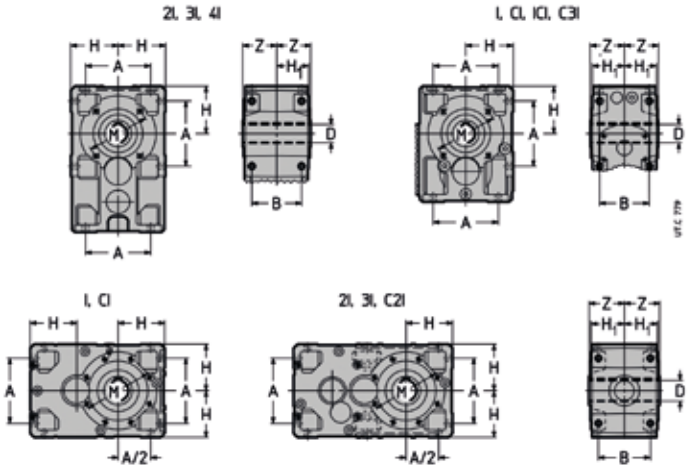

Fully interchangeable gear reducers – of the same size – independently from train of gears.

1.1 - Gear reducer

Main structural features

– **universal** mounting having feet integral with housing on 4 faces (3 faces for train of gears: I sizes 63 ... 100, CI sizes 40 ... 100, C3I, ICI) and B14 flange on 2 faces (1 face for standard model 2I, 3I and 4I sizes 40 ... 125); gear reducers and gearmotors 2I, 3I sizes 40 ... 125 and 4I sizes 63 ... 125 having reaction recess for shaft mounting arrangement (see ch. 6), B5 flange with spigot recess mountable on the faces with B14 flange (see ch. 17); the drawing and the strength of housing allow **interesting shaft mounting arrangements**, foot mounted motor coupling arrangement (see ch. 18) and attachments points for a variety of equipment;

– gear reducer overall dimensions are suitable to be equipped with large motor sizes transmitting **high nominal and maximum torques**, supporting **high loads on low and high speed shaft ends**;

– standard hollow low speed shaft in steel, with keyway and retaining ring grooves for extraction (excluding sizes 40 ... 63); standard (left or right hand extension) or double extension low speed shaft (see ch. 17).

– gearmotors MR 4I (sizes 63 ... 125), MR C3I (sizes 50 ... 125) with **first reduction stage** including **2** coaxial cylindrical gear pairs in order to get high transmission ratio, with standardized motor, in an economic and compact way;
– improved and upgraded modular construction both for component parts and assembled product;
– standardized dimensions and compliance with standards;
– gear reducers: input face with machined surface (flange for R 3I 63 ... 125, R ICI) with fixing holes, high speed shaft end with key;
– gearmotors MR 3I 40 ... 125, MR 4I, MR ICI and MR C3I: first reduction pinion gear directly keyed onto the shaft end of **IEC standard motor**;
gearmotors MR 2I, MR 3I 140 ... 360, MR CI, MR C2I: **IEC standard motor** directly fitted into hollow high speed shaft; with **motor size ⩾ 200**, to obtain easier installing and removal and avoid fretting corrosion, bevel helical gearmotors (CI, C2I) have a keying system with key and bronze bushing whereas helical gearmotors (2I, 3I) have a keying system with hollow high speed shaft with longitudinal cuts, shrink disc and key for a perfect alignment;
– possibility of **second high speed shaft extension** (or intermediate shaft extension for train of gears 3I 40 ... 125, 4I, ICI, C3I);
– taper roller bearings, excluding some shafts (high speed shaft) on which bearings are cylindrical roller or ball type;
– **cast iron** single-piece housing 200 UNI ISO 185 (**spheroidal** UNI ISO 1083 for sizes 140, 180, 225, 280, 360) with **stiffening ribs and high oil capacity**;
– oil bath lubrication; synthetic oil, providing lubrication «**for life**» and 1 plug (sizes 40 ... 64) or 2 plugs (sizes 80 and 81), **filled with oil** (sizes 40 ... 81); synthetic or mineral oil (ch. 18) with filler plug and valve, level and drain plug, supplied **without oil** (sizes 100 ... 360); sealed;
– additional bearings lubrication through proper pipelines or pump (sizes 100 ... 360);
– natural or forced cooling (fan – also in **flange** mounting – and/or coil, see ch. 17);
– **paint**: **external** coating in epoxy powder paint (sizes 40 ... 81) or water based dual compound polyurethane enamel (sizes 100 ... 360) resistant to atmospheric and aggressive agents (corrosivity category C3 ISO 12944-2); suitable for further coats only with dual-compound products after degreasing and sanding; color blue RAL 5010 DIN 1843, other colors and/or painting cycles on request see ch. 17); **internal** protection with epoxy powder paint (sizes 40 ... 81) suitable to resist to synthetic oils or with synthetic paint (sizes 100 ... 360) suitable to resist polyalphaolefines based synthetic or mineral oils.
– possibility to obtaining combined gear reducer and gearmotor units providing high transmission ratios;
– non-standard designs: backstop device (always pre-arranged, excluding size 40 and helical size 50), stepped hollow low speed shaft, supplementary cooling and lubrication systems, shaft mounting arrangements, special paints, Ⓔx **ATEX II 2 GD** and **3 GD**, design for agitators, etc. (ch. 17).
– **helical «long» model**: it is derived from the standard one (completing it) through the addition of an **idle gear** between wheel and pinion of the second-last reduction stage (first reduction stage for 2I train of gears) hence allowing to **distance considerably** the input and output shafts, whilst maintaining the same **specifications and performances** as the standard model. In particular:
– same **input and output coupling dimensions** (shafts and B14 output flange, motor sizes);
– same high speed shaft **bearing** (shafts and bearings) with the same transmission ratio;
– same **foot mounting dimensions** (A_1 dimension excluded);
– same **transmission ratios and performances**;
– same **combinations of motors and gear reducers**;
– same **thermal power** (thanks to the greater length of the housing);
– same **accessories** and non-standard **designs**;
– same **high quality level** (design solutions, production processes and tests, components, single-piece housing, modular and aesthetic design).

The «long» gear reducer obtained through this new design concept, makes possible also very low transmission ratios with proportioned and generous bearings in terms of high speed shaft roller bearings and shaft diameters.

Everything stated in this catalog is to be intended **valid both for standard and long model**, except otherwise stated.

Comparison between gear reducer R 2I 250 standard type UP2D and relevant long type **UP4D** (**patent pending**): highlighting the extension of center distance, the presence of the idle gear and the reversing of rotation direction.

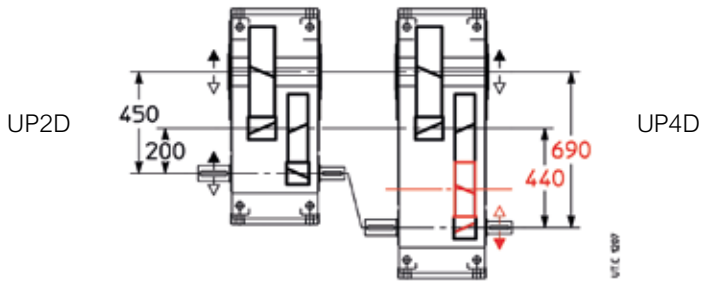

1 - General specifications

Train of gears

– 1, 2, 3, 4 helical gear pairs (helical gear reducers);
– 2, 3 helical gear pairs and **1 idle gear** («long» model, helical gear reducers);
– 1 bevel gear pair plus 1, 2, 3 helical gear pairs (bevel helical gear reducers);
– 6 sizes with final reduction center distance to R 10 (40 ... 125, with 2 size pairs: standard and strengthened); 9 sizes with final reduction center distance to R 20 (140 ... 360, with 1 size pair: standard and strengthened), for a total of **18 sizes**;
– nominal transmission ratios to R 10 (i_N = 2.5 ... 160; i_N = 80 ... 400 for 4I) for helical gear units; to R 10 (i_N = 5 ... 200; i_N = 80 ... 500 for C3I) for bevel helical gear units; to R 20 (i_N = 9 ... 90), excluding I and ICI, for all sizes 140 ... 360;
– casehardened and hardened gear pairs in 16 CrNi4 or 20 MnCr5 steel (depending on size) and 18 NiCrMo5 according to UNI EN 10084;
– helical gear pairs with **ground** profile;
– GLEASON spiral bevel gear pairs with **ground** or accurately lapped profile;
– gear load capacity calculated for tooth breakage and pitting.

Specific standards

– nominal transmission ratios and principal dimensions according to UNI 2016 (DIN 323-74,NF X 01.001, BS 2045-65, ISO 3-73);
– toothing profile to UNI 6587-69 (DIN 867-86, NF E 23.011, BS 436.2-70, ISO 53-74);
– shaft heights to UNI 2946-68 (DIN 747-76, NF E 01.051, BS 5186-75, ISO 496-73);
– fixing flanges B14 and B5 (the latter with spigot «recess») taken from UNEL 13501-69 (DIN 42948-65, IEC 72.2);
– medium series fixing holes to UNI 1728-83 (DIN 69-71, NF E 27.040, BS 4186-67, ISO/R 273);
– helical shaft ends (long or short) to UNI ISO 775-88 (DIN 748, NF E 22.051, BS 4506-70, ISO/R775) with tapped butt-end hole to UNI 9321 (DIN 332 BI. 2-70, NF E 22.056) excluding correspondence d-D;
– parallel keys UNI 6604-69 (DIN 6885 BI. 1-68, NF E 27.656 and 22.175, BS 4235.1-72, ISO/R/773-69) except for specific cases of motor-to-gear reducer coupling where key height is reduced;
– mounting positions derived from CEI 2-14 (DIN EN 60034-7, IEC 34.7);
– load capacity verified according to UNI 8862, DIN 3990, AFNOR E 23-015, ISO 6336; thermal capacity verified.

Bevel helical gearmotor CI (also C2I) with high speed shaft for **90° multiple drives**.

Helical gearmotor with **backstop device** (always prearranged)

Bevel helical gearmotor ICI (also CI) with double extension low speed shaft and **high speed shaft extension** (design UO3D).

1.2 - Electric motor

Gearmotor dimensions and masses of present catalog (see ch. 12 and 14) refer to motor catalog TX.

Main structural features

– motor **standardized to IEC**;
– asynchronous three-phase, totally-enclosed, externally ventilated, with cage rotor;
– **IP 55** protection, **insulation class F**, temperature rise class **B**;
– rated power delivered on continuous duty S1 (excluding some cases of motor sizes with power not according to standard; see specific documentation) and referred to nominal voltage and frequency; maximum ambient temperature 104 °F (40 °C) and altitude 3 300 ft (1 000 m);
– capacity to withstand one or more overloads up to 1.6 times the nominal load for a maximum total period of 2 min per single hour;
– starting torque with direct on-line start at least 1,6 times the nominal one (it is usually higher);
– mounting position B5 and derivates as shown in the following table;
– **suitable for inverter duty** (generous electromagnetic sizing, low-loss electrical stamping, phase separators, etc.)
– designs available for every application need: flywheel, independent cooling fan, independent cooling fan and encoder, etc.

Brake motor constructive features

– particularly strong construction to withstand braking stresses; **maximum reduction of noise level**;
– spring-loaded d.c. electromagnetic brake; feeding from the terminal box; brake can also be independently fed directly from the line;
– braking torque proportioned to motor torque (usually $T_f \approx 2\ T_N$) and adjustable by adding or removing spring pairs;
– possibility of high frequency of starting;
– quick and rapid stop;
– hand lever for manual release with automatic return (on request for size ≤ 160S); removable lever rod.

For other specifications and details see **specific documentation of cat. TX**.

Main coupling dimensions [mm]

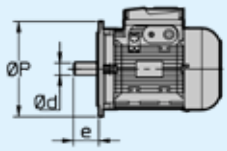

Motor size	IEC 60072 (UNEL 13117-17, DIN 43677 Bl. 1.A-65) Motor mounting position		
	IM **B5** Ød × e - ØP	**B5R** Ød × e - ØP	**B5A** Ød × e - ØP
63	11 × 23 - 140	–	–
71	14 × 30 - 160	11 × 23 - 140	14 × 30 - 140
80	19 × 40 - 200	14 × 30 - 160	19 × 40 - 160
90	24 × 50 - 200	19 × 40 - 200	–
100, 112	28 × 60 - 250	24 × 50 - 200	–
132	38 × 80 - 300	28 × 60 - 250	–
160	42 × 110 - 350	38 × 80 - 300	–
180	48 × 110 - 350	–	–
200	55 × 110 - 400	48 × 110 - 350	–
225	60 × 140 - 450	–	–
250	65 × 140 - 550	60 × 140 - 450	–
280	75 × 140 - 550	–	–
315	80 × 170 - 660	75 × 140 - 550	–

Short time duty (S2) and intermittent periodic duty (S3); duty cycles S4 ... S10

In case of a duty-requirement type S2 ... S10 the motor power can be increased as per the following table; starting torque keeps unchanged.

Short time duty (S2). – Running at constant load for a given period of time less than that necessary to reach normal running temperature, followed by a rest period long enough for motor's return to ambient temperature.

Intermittent periodic duty (S3). – Succession of identical work cycles consisting of a period of running at constant load and a rest period. Current peaks on starting are not to be of an order that will influence motor heat to any significant extent.

$$\text{Cyclic duration factor} = \frac{N}{N + R} \cdot 100\%$$

where: N being running time at constant load,
R the rest period and N + R = 10 min (if longer consult us).

Duty			Motor size[1]		
			63 ... 90	**100 ... 132**	**160 ... 315**
S2	duration of running	90 min	1	1	1.06
		60 min	1	1.06	1.12
		30 min	1.25	1.18	1.25
		10 min	1.25	1.25	1.32
S3	cyclic duration factor	60%	1.12		
		40%	1.18		
		25%	1.25		
		15%	1.32		
S4 ... S10			consult us		

1) For motor sizes 90LC 4, 112MC 4, 132MC 4, consult us.

Frequency 60 Hz

Normal motors up to size 132 wound for 50 Hz can be fed at 60 Hz; in this case speed increases by 20%. If input-voltage corresponds to winding voltage, power remains unchanged, providing that higher temperature rise values are acceptable and that the power requirement is not unduly demanding, whilst starting and maximum torques decrease by 17%. If input-voltage is 20% higher than winding voltage, power increases by 20% whilst starting and maximum torques keep unchanged.

For brake motors, **see specific literature**.

From size 160 upwards motors – both standard and brake ones – should be wound for 60 Hz exploiting the 20% power increase as a matter of course.

Power available with high ambient temperature or high altitude

When motor has to run at an ambient temperature higher than 104 °F or at altitude above sea level higher than 3 300 ft, it has to be derated according to the following tables:

Ambient temperature [°F]	**86**	**104**	**113**	**122**	**131**	**140**
P/P_N [%]	106	100	96.5	93	90	86.5

Altitude a.s.l. [ft]	**3 300**	**4 900**	**6 600**	**8 200**	**9 800**	**11 500**	**13 100**
P/P_N [%]	100	96	92	88	84	80	76

Electric motor specific standards

- nominal powers and dimensions to CENELEC HD 231 (IEC 72-1, CNR-CEI UNEL 13117-71 and 13118-71, DIN 42677, NF C 51- 120, BS 5000-10 and BS 4999-141) for mounting positions IM B5, IM B14 and derivatives;
- nominal performances and running specifications to CENELEC EN 60034-1 (IEC 34-1, CEI EN 60034-1, DIN VDE 0530-1, NF C51- 111, BS EN 60034-1);
- protection to CENELEC EN 60034-5 (IEC 34-5, CEI 2-16, DIN EN 60034-5, NF C51-115, BS 4999-105);
- mounting positions to CENELEC EN 60034-7 (IEC 34-7, CEI EN 60034-7, DIN IEC 34-7, NF C51-117, BS EN 60034-7);
- sound levels to CENELEC 60034-9 (IEC 34.9, DIN 57530 pt. 9);
- balancing and vibration velocity (vibration under standard rating N) to CENELEC HD 53.14 S1 (IEC 34-14, ISO 2373 CEI 2-23, BS 4999-142); motors are balanced with half key inserted into shaft extension;
- cooling to CENELEC EN 60034-6 (CEI 2-7, IEC 34-6): standard type IC 411; type IC 416 for non-standard design with axial independent cooling fan.

Size[1] T_{N2} [lb in] - F_{r2} [lb]	I[2]	CI[4]	ICI	2I[5]	3I	2I «long»	3I «long»	C2I
40[3] 850 - 500								
50 1 800 - 715					[3]			
63 3 450 - 1120								
64 4 370 - 1120								
80 7 300 - 1 800								
81 8 750 - 1 800								
100 15 000 - 2 800							[3]	
125 30 700 - 4 500							[3]	
140 45 000 - 6 300								
160 69 000 - 8 000								
180 97 500 - 10 000								
200 136 000 - 12 500								
225 195 000 - 16000								
250 280 000 - 20 000						[2]		
280 387 000 - 25 000						[2]		
320 487 000 - 31 500		[2]				[2]		
321 615 000 - 31 500		[2]				[2]		
360 775 000 - 40 000		[2]				[2]		

1) For larger sizes see cat. H.
2) Gear reducers only.
3) Gearmotors only.
4) Also **C3I sizes 50 ... 125** (gearmotors only).
5) Also **4I sizes 63 ... 125** (gearmotors only).

2 – Designation

2 - Designation

Designation code

R	**2I**	**320**	**U**	**P**	**2**	**D**			**-**	**10.3**	**B3**				
MR	**C2I**	**200**	**U**	**O**	**2**	**V**	**-**	**48 × 350**	**-**	**35.3**	**V5**		**HB3 180L4 400-50 B5**	**TB3**

MOTOR TERMINAL BOX POSITION
(ref. page 22)

MOTOR DESIGNATION
(ref. page 22)

INPUT SPEED
(ref. page 22)

MOUNTING POSITION
(ref. page 21)

TRANSMISSION RATIO

IEC MOTOR COUPLING DIMENSIONS
Ød × ØP (ref. ch. 1.2)

DESIGN
- **A** standard
- **...** others (ref. ch. 8,10, 12, 14)

MODEL
- **2, 3** standard (ref. ch. 8, 10, 12, 14)
- **4** long (ref. ch. 8, 12)

SHAFT POSITION
- **P** helical gear units
- **O** bevel helical gear units

FASTENING
- **U** universal

SIZE
- **40 ... 360** final center distance reduction [mm]

TRAIN OF GEARS

Helical gear pairs:
- **I** 1 helical gear pair
- **2I** 2 helical gear pairs
- **3I** 3 helical gear pairs
- **4I** 4 helical gear pairs

Bevel helical gear pairs:
- **CI** 1 bevel and 1 helical gear pair
- **ICI** 1 helical, 1 bevel and 1 helical gear pair
- **C2I** 1 bevel and 2 helical gear pairs
- **C3I** 2 helical, 1 bevel and 1 helical gear pair

MACHINE
- **R** gear reducer
- **MR** gearmotor

Note: For ATEX environment see details at chapter 17(37).

Gear reducer mounting position

Gear reducer and gearmotor mounting positions are described in ch. **8**, **10**, **12**, **14** (the mounting position designation refers to foot mounting only, even if gear reducers are for universal mounting; e.g.: B14 flange fastening and derivatives; B5 flange fastening and derivatives, see ch. 17). Here following some designation examples of important mounting positions.

1. **Standard B3** mounting position; when having no particular needs, **prefer B3 mounting position** for its technical and economic cost effectiveness (maximum simplification of lubrication system, lower oil splash, lower gear reducer heating, stock availability).

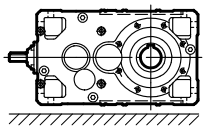

2. **Non-standard** mounting positions

2a. Mounting position as per catalog (see ch. 8, 10, 12,14), **only one** and **fixed**, differing from B3;
e.g.: mounting position **B6**

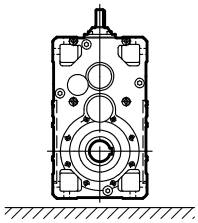

2b. **Inclined and fixed** mounting position; e.g.: mounting position **B6 - 20° B3**

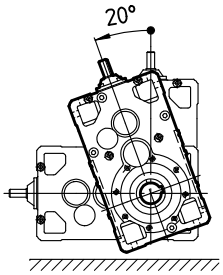

2c. **One only** mounting position **but defined within a pre-determined angle**;
e.g.: mounting position within **B6 - 20° B3 / B6 - 65° B8**

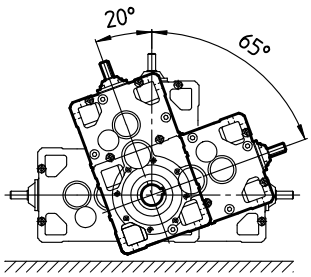

2d. **Oscillatory** mounting position (gear reducer oscillating when running);
e.g.: mounting position B6 **- 20° B3 / B6 - 65° B8 oscillatory**

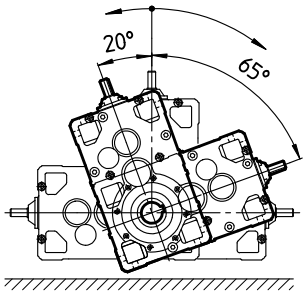

UT. C 2088

2 - Designation

Input speed

Complete the designation stating the input speed n_1, in the following cases:
– $n_1 > 1800$ rpm or $n_1 \leqslant 355$ rpm;
– for cases highlighted with following symbols (▲, ⚒, 💧) (ch. 7, 8, 9, 10, 12, 14);
– when forced cooling is required.

Example:
R I 125 UP2A-2.53 **mounting position V6**, n_1= **900** rpm
R CI 360 UO2V-16 n_1= **2000** – **600** rpm

Motor

When the gearmotor is supplied **equipped with a standard Rossi motor**, fill in the designation stating the motor designation (ref. cat. TX).
Examples:
MR ICI 200 UO3A - 42 × 350 - 50.3
HB3 160M 4 400-50 B5

MR ICI 200 UO3A - 42 × 350 - 50.3
HBZ 160L 4 400-50 B5

When the gearmotor is supplied **without motor**, omit the designation and add «without motor».
Example:
MR 2I 140 UP2A - 48 × 350 - 17.6 **without motor**

When motor is supplied by the **Buyer**[1)], complete the designation by stating the description of «motor supplied by us».

1) The motor supplied by the Buyer must be to IEC with mating surfaces machined under accuracy rating IEC 60072-1 and is to be sent carriage and expenses paid to our factory for fitting to the gear reducer.

Example:
MR 2I 140 UP2A - 48 × 350 - 17.6
motor supplied by us

Motor terminal box position

Complete the designation stating the motor terminal box position if differing from the standard one (TB0; see ch.12, 14 and scheme below).
The cable input is Buyer's responsibility.
Example:
MR ICI 200 UO3A - 42 × 350 / 50.3
HB3 160M 4 400-50 B5 **TB3**

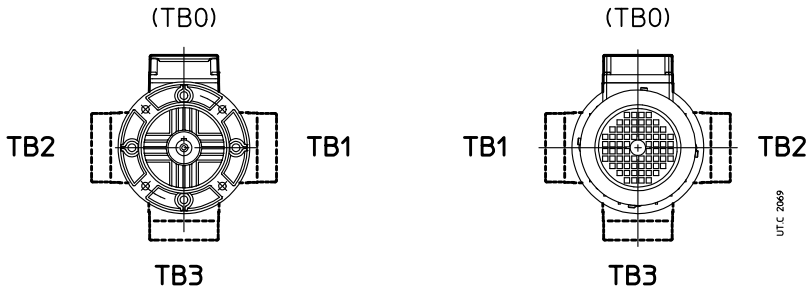

View from drive end (D) View from non-drive end (N)

Accessories and non-standard designs

In the event of a gear reducer or gearmotor being required in a design different from those stated above, specify it in detail (ch. 17).

3 – Service factor *fs*

3 - Service factor *fs*

Service factor *fs* takes into account the different running conditions (nature of load, running time, frequency of starting, speed n_2, other considerations) which must be referred to when performing calculations of gear reducer selection and verification.
The powers and torques shown in the catalog are nominal (i.e. valid for *fs* = 1) for gear reducers, corresponding to the *fs* indicated for gearmotors.
The **minimum service factor required** is given by:

$$\boldsymbol{fs} \text{ required} \geqslant \boldsymbol{fs}_1 \cdot \boldsymbol{fs}_2 \cdot \boldsymbol{fs}_3 \cdot \boldsymbol{fs}_4 \cdot \boldsymbol{fs}_5$$

or, in case of selection according to $\boldsymbol{n}_2 \cdot \boldsymbol{L}_h$:

$$\boldsymbol{fs} \text{ required} \geqslant \boldsymbol{fs}_1(8 \text{ h/d}) \cdot \boldsymbol{fs}_2 \cdot \boldsymbol{fs}_3 \cdot \boldsymbol{fs}_4$$

Service factor $\boldsymbol{fs}_1$ according to **nature of load** and to **running time**
Details and considerations about service factor.

Nature of load of driven machine[1]		fs_1[2] Running time [h/d] ≤				
Ref.	Description	**2**	**4**	**8**	**16**	**24**
a	**Uniform**	0.8[3]	0.9[3]	1	1.18	1.32
b	**Moderate overloads** (1.6 x normal)	1	1.12	1.25	1.5	1.7
c	**Heavy overloads** (2.5 x normal)	1.32	1.5	1.7	2	2.24

Service factor $\boldsymbol{fs}_2$ based on **nature of load** and of **frequency of starting**

Nature of load of driven machine[1]		fs_2 Frequency of starting ***z*** [starts/h]							
Ref.	Description	**2**	**4**	**8**	**16**	**32**	**64**	**125**	**250**
a	**Uniform**	1	1.06	1.12	1.18	1.25	1.32	1.4	1.5
b	**Moderate overloads** (1,6 x normal)	1	1	1.06	1.12	1.18	1.25	1.32	1.4
c	**Heavy overloads** (2,5 x normal)	1	1	1	1.06	1.12	1.18	1.25	1.32

Service factor $\boldsymbol{fs}_3$ based on **motor type**

Motor type Description		fs_3
Electric three-phase	$\boldsymbol{P}_1 \leqslant 9.2$ kW	1
	$\boldsymbol{P}_1 > 9.2$ kW[4]	1.06[4]
Brake electric three-phase		1.06
Internal combustion	multi-cylinder	1.25
	single-cylinder	1.5

Service factor $\boldsymbol{fs}_4$ based on **reliability level**

Reliability level[5]	fs_4
normal	1
medium	1.25
high	1.4

Service factor $\boldsymbol{fs}_5$ based on **output angular speed** n_2

Output speed n_2 [min^{-1}]	fs_5
560 ÷ 355	1.25
355 ÷ 224	1.18
224 ÷ 140	1.12
140 ÷ 90	1.06
< 90	1

fs values stated above are valid for:
– maximum time on overload 15 s, on starting 3 s; if over and/or subject to heavy shock effect, consult us;
– a whole number of overload cycles (or start) **imprecisely** completed in 1, 2, 3 or 4 revolutions of low speed shaft; if **precisely** a continuous overload should be assumed;
Motors having a starting torque not exceeding nominal values (star-delta starting, particular types of motor operating on direct current, and single-phase motors), and particular types of coupling between gear reducer and motor, and gear reducer and driven machine (flexible, centrifugal, fluid and safety couplings, clutches and belt drives) affect service factor favourably, allowing its reduction in certain heavy-duty applications; consult us if need be.

1) For indication on the type of load of the driven machine according to the application, see table on next page.
2) When selecting with $\boldsymbol{n}_2 \cdot \boldsymbol{L}_h$. use exclusively the column 8 h/d.
3) Verify that the torque T_2 is lower than or equal to T_{N2} valid for $n_1 \leqslant 90$ rpm (see pages 107 and 195); when having variable load verify each load cycle interval (see ch. 5.2).
4) For Y-Δ starts, running with inverter or «soft start» devices, fs_3=1.
5) Reliability degrees higher than normal are required in presence of: very difficult maintenance, great importance of gear reducer in the production cycle, safety, etc.

3 - Service factor *fs*

Classification of nature of load according to application

Application	Ref. load *
Stirrers and mixers	
Liquids:	
– constant density	a
– varying density, solids in suspension, high viscosity	b
concrete mixers, mullers, flash mixers	c
Feeders and batchers	
rotary (roller, table, sector)	a
belt, screw, plate	a, b
reciprocating, shaker	c
Compressors	
centrifugal (single-stage, multi-stage)	a
rotary (vane, lobe, screw)	b
axial	b
reciprocating:	
– multi-cylinder	b
– single-cylinder	c
Elevators	
belt, centrifugal or gravity discharge, screw jacks, escalators	a, b
bucket, arm and tray elevators, paddle wheel, hoists, skips	b
man lifts, mobile scaffolding, passenger transport (cable cars, chair, ski, gondola lifts etc.)	a, b
Excavators and dredges	
cable reels, conveyors, pumps, winches (manoeuvring and utility), stackers, draining wheels	b
cutter head drives, cutters, excavators (bucket ladder, paddle wheel, cutter)	c
vehicles:	
– on rails	b
– crawlers	c
Crushers and granulators	
sugar cane, rubber, plastics	b
minerals, stone	c
Cranes, winches and travelling lifts	
travel (bridge, trolley, forks)[1]	b
slewing	b
hoist[2]	a, b
Food industry	
cookers (cereals and malt), mash tubs	a
slicers, dough mixers, meat grinders, beet slicers, centrifuges, peelers, winemaking plant, bottle/bin/cratewashers, rinsers, fillers, corkers, cappers, extruders, crate filling and emptying equipment	b
Paper mills	
winders, suction rolls, dryers, embossing machinery, bleachers, press rolls, coating rolls, paper rolls, beaters, and pulpers	a
agitators, mixers, extruders, chip feeders, calenders, felt dryers and stretchers, rag grinders, washers, thickeners	b
cutters, chippers, calenders (super), felt whippers, glazing machines, presses	c

Application	Ref. load *
Lumber and woodworking industries	
mechanical loaders, pallet stackers	a, b
conveyors for:	
– boards, chips, waste	b
– logs	c
machine tools (planing, cutting, cross-cut and re-sawing, tenoning, bevelling, moulding, sanding, sizing and scratch-brushing machinery etc.):	
– feed drive	b
– cutter drive	b, c
barkers:	
– mechanical and hydraulic	b
– drum	c
Oil industry	
paraffin filter presses, chillers	b
rotary drilling equipment	c
pumping equipment	
Textile industry	
calenders, cards, pickers, dryers, nappers, spinners, slashers, pads, soapers, washers, mangles, tenter frames, looms (Jacquard), warping machines, winders, knitting machines, dyeing machines, twisting frames, gig mills, cutters	b
Clay working machinery	
pug mills, extruders, rotary deslimers	b
brick and tile presses	c
Rubber and plastics industries	
extruders:	
– plastics	b
– rubber	c
mixing mills, warming mills, friction calenders, refiners, tubers and strainers, rolling mills	b
crackers, masticators	c
Wrapping and stacking machinery	
wrapping (film, cardboard), binding, strapping and labelling equipment	a
palletizing/depalletizing and stacking/unstacking machinery, palletizing robots	b
Engineering machine tools	
boring, shaping, planing, broaching, gear cutting and FMS machines, etc.:	
– main drivers (cut and feed)	b
auxiliary drives (tools magazine, chip conveyor, workpiece infeed)	a
Mechanisms	
indexing, crank and slotted link, Maltese cross, articulated parallelogram	b
rod and crank, cam control (cam and tappet, cam and rocker)	c
Metal mills	
shears:	
– trimming, cropping, facing	b
– for sheet/plate, ingots, billets	c

Application	Ref. load *
transverse drive rollers, draw benches, coilers, inverter, draglines, flattening rolls, bending rolls	b
pushers, descaling equipment, pipe welders, mill roll train drives, rolling mills, forging presses, billet croppers, power hammers, punches, impact extruders, tapping machines, straightening presses	c
Rollerways	b, c
Mills	
rotary (rod, roller, pebble, ball)	b
hammer, pin crusher, centrifugal, impact, rolling (ball or roller)	c
Pumps	
rotary (gear, screw, lobe, vane) and axial	a, b
centrifugal:	
– liquids, constant density	a
– liquids, variable density or high viscosity	b
proportioning	b
alternative:	
– single acting (⩾ 3 cylinders), double acting (⩾ 2 cylinders)	b
– single acting (⩽ 2 cylinders), double acting single cylinder	c
Rotating drums	
dryers, chillers, rotary kilns, washing machines	b
tumblers, cement kilns	c
Transport conveyors	
belts (plastic, rubber, metal) for:	
– fine grade loose material	a
– coarse grade loose material or discrete items	b
belt, apron, bucket, slat, tray, roller, screw, chain, overhead rail, assembly	b
drag (slat, flight, chain, Redler, etc.) ground level chain, flow accumulating	b
reciprocating, shaker	c
overhead power rail	
Sewage treatment	
biological tanks (revolving disk)	a
dewatering screws, collectors, rotary screens, thickeners, vacuum filters, anaerobic digestion tanks	b
aerators, rotary breakers	c
Screen and riddles	
air washing, travelling water intake	a
rotary (stone, gravel, cereals)	b
vibrating screens, riddles, jigs	c
Fans	
small diameter (centrifugal, axial-flow)	a
large diameter (mines, furnaces, etc.) cooling towers (inducted or forced draft), ducted, piston	b

* Nature of load reference admits of modification where precise knowledge of duty is available.
1) In the traverse movement of the bridge usually it is necessary to have at least fs > 1,6 and in the storeyard cranes fs > 2 (container handling).
2) For selection of fs to F.E.M./I-10.1987, consult us.

This page is intentionally left blank.

4 – Thermal power *Pt* [hp]

4 - Thermal power *P*t [hp]

Nominal thermal power Pt_N, written in red in the table, is that which can be applied at the gear reducer input, also for long model, without exceeding 203 °F[1] (95 °C) approximately oil temperature when operating in following running conditions:
– input speed n_1 = 1 800 rpm;
– mounting position B3;
– continuous duty S1;
– maximum ambient temperature 68 °F (20 °C) (in the table, values referred to 104 °F (40 °C) are stated as well);
– maximum altitude 3 300 ft above sea level;
– air speed ⩾ 4 ft/s (Value typical in presence of an gearmotor with self cooled motor).

T_{amb} °F	Gear red. size	Gear reducer size Pt_N [2] hp														
		40	**50**	**63, 64**	**80, 81**	**100**	**125**	**140**	**160**	**180**	**200**	**225**	**250**	**280**	**320,321**	**360**
68 °F (20 °C)	**I**	–	–	14	21.2	31.5	47.5	63	71	100	112	160	180	250	280	400
	2I	5	7.5	11.2	17	25	37.5	42.5	56	63	90	100	140	160	224	250
	3I	4.25	6.3	9.5	14	21.2	31.5	35.5	47.5	53	75	85	118	132	190	212
	4I	–	–	7.1	10.6	16	23.6	–	–	–	–	–	–	–	–	–
	CI	4.5	7.1	10.6	16	23.6	35.5	47.5	53	75	85	118	132	190	212	300
	ICI	3.55	5.3	8	11.8	18	26.5	30	40	45	63	–	–	–	–	–
	C2I	–	–	–	–	–	–	35.5	47.5	53	75	85	118	132	190	212
	C3I	–	4	6	9	13.2	20	–	–	–	–	–	–	–	–	–
104 °F (40 °C)	**I**	–	–	10.6	16	23.6	35.5	47.5	53	75	85	118	132	190	212	300
	2I	3.75	5.6	8.5	12.5	19	28	31.5	42.5	47.5	67	75	106	118	170	190
	3I	3.15	4.75	7.1	10.6	16	23.6	26.5	35.5	40	56	63	90	100	140	160
	4I	–	–	5.3	8	11.8	18	–	–	–	–	–	–	–	–	–
	CI	3.35	5.3	8	11.8	18	26.5	35.5	40	56	63	90	100	140	160	224
	ICI	2.65	4	6	9	13.2	20	22.4	30	33.5	47.5	–	–	–	–	–
	C2I	–	–	–	–	–	–	26.5	35.5	40	56	63	90	100	140	160
	C3I	–	3	4.5	6.7	10	15	–	–	–	–	–	–	–	–	–

Always verify that power applied P_1 is lower than or equal to gear reducer nominal thermal power Pt_N multiplied by the corrective coefficients ft_1, ft_2, ft_3, ft_4, ft_5 (stated in the following tables) considering the several operational conditions:

$$P_1 \leqslant Pt_N \cdot ft_1 \cdot ft_2 \cdot ft_3 \cdot ft_4 \cdot ft_5$$

When the power applied is not constant and when the exact load cycle is given, it is possible, or advisable, to calculate the equivalent power applied, according to the formula:

$$P_{1th} = \frac{1}{\eta} \cdot \sqrt[3]{\frac{P^3_{2_1} \cdot t_1 + P^3_{2_2} \cdot t_2 + \ldots + P^3_{2_i} \cdot t_i + \ldots + P^3_{2_n} \cdot t_n}{t_c}}$$

where:
η is the efficiency of gear reducer (see ch. 6);
P_{2i} [kW] is the power, referred to the gear reducer output, required in the time interval t_i [s];
$t_c = t_1 + t_2 + \ldots + t_i + \ldots + t_n$ is the total duration of load cycle [s].

In these cases choose factor ft_2 from the continuous duty column S1.

Whenever the thermal verification should not be satisfied, in spite the prearrangement of cooling system, it is possible to install an **independent cooling unit with heat exchanger** (see ch. 17); consult us.

Thermal power needs not be taken into account when maximum duration of continuous running time is 1 ÷ 3 h (from small to large gear reducer sizes) followed by rest periods long enough to restore the gear reducer to near ambient temperature (likewise 1 ÷ 3 h).

In case of maximum ambient temperature above122 °F (50 °C) or below 32 °F (0 °C) consult us.

Thermal factor ft_1 (= $ft_{1a} \cdot ft_{1b}$) according to **cooling system** and **input speed** n_1

Cooling system				ft_{1a}, ft_{1b} input speed n_1 [rpm] ⩾				
				710	**900**	**1 120**	**1 400**	**1 800**
ft_{1a}	Natural convection	train of gears	I	2	1.8	1.6	1.4	1
			2I, CI	1.4	1.32	1.25	1.18	1
			3I, 4I, ICI, C2I, C3I	1.12	1.12	1.09	1.06	1
ft_{1b}	Fan cooling[3) 4) 6)]	with 1 radial fan (helical gear unit)		1.12	1.18	1.25	1.32	1.4
		with 2 radial fans (helical gear unit) with 1 radial fan (bevel helical gear unit)		1.25	1.4	1.6	1.8[5)]	2
	With water coil[4)]			2				
	With internal exchanger[4)]			see ch. 17				

1) Corresponding to a mean temperature of the housing external surface approx. equal to 185 °F (85°C) (locally this temperature may also reach the oil one).
2) For bevel helical gear reducers and gearmotors with double extension high speed shaft multiply Pt_N by **0,85**.
3) With simultaneous water cooling by coil, values are multiplied by 1,8.
4) Refer to ch. 17 about positions, overall dimensions and design verification.
5) Value valid also for proper electric fan (installation by Customer).
6) With axial fan, the values are to be multiplied by 1,12. Consult us.

4 - Thermal power *P*t [hp]

Thermal factor ft_2 according to **ambient temperature** and **duty**

Maximum ambient temperature °F (°C)	ft_2 Continous duty	Intermittent duty S3 ... S6 Cyclic duration factor [%] for 60 min running[1]			
	S1	**60**	**40**	**25**	**15**
122 (50)	0.6	0.71	0.8	0.95	1
104 (40)	0.75	0.9	1	1.12	1.25
86 (30)	0.9	1.06	1.18	1.32	1.5
68 (20)	**1**	1.18	1.32	1.5	1.7
50 (10)	1.12	1.32	1.5	1.7	1.9

Thermal factor ft_4 according to **installation altitude**

Altitude a.s.l. ft	ft_4
⩽ 3 300	1
3 300 ÷ 6 600	0.95
6 600 ÷ 9 800	0.9
9 800 ÷ 13 100	0.85
> 13 100	0.8

Thermal factor ft_3 according to **mounting position** (see also ch. 8, 10, 12, 14); **where it is not specified ft_3 = 1**

Train of gears	Mounting position		ft_3 140	160	180	200	225	250	280	320, 321	360
R I	**B6**		1	0.71	0.71	0.71	0.71	0.71	0.71	0.71	0.71
	B7		0.85	0.85	0.85	0.85	0.85	0.85	0.85	0.85	0.85
	B8		0.85	1	0.85	1	0.85	1	0.85	1	0.85
R 2I MR 2I	**B6**	$i_N \leqslant 14$ $i_N \geqslant 16$	1 1	1 1	1 1	0.85 1	0.85 1	0.85 1	0.85 1	0.85 0.85	0.85 0.85
	B7	$i_N \leqslant 14$ $i_N \geqslant 16$	1 1	0.71 1	0.71 1	0.71 1	0.71 1	0.71 0.71	0.71 0.71	0.71 0.71	0.71 0.71
	V5	$i_N \leqslant 14$ $i_N \geqslant 16$	1 1	1 1	1 1	0.71 1	0.71 1	0.71 1	0.71 1	0.71 0.71	0.71 0.71
	V6	$i_N \leqslant 14$	1	1	1	1	1	1	1	0.85[2]	0.85[2]
R 3I MR 3I	**B6**	$i_N \leqslant 63$	1	1	1	1	1	0.85	0.85	0.85	0.85
	B7	$i_N \leqslant 63$ $i_N \geqslant 71$	1 1	1 1	1 1	0.71 1	0.71 1	0.71 1	0.71 1	0.71 0.71	0.71 0.71
	V5	$i_N \leqslant 63$	1	1	1	1	1	1	1	0.71	0.71
	V6	$i_N \leqslant 63$	1	1	1	1	1	0.85	0.85	0.85	0.85
R CI	**B6**	$i_N \leqslant 8$	1	1	1	1	1	0.85	0.85	0.85	0.85
	B7		1	0.71	0.71	0.71	0.71	0.71	0.71	0.71	0.71
	B8		0.85	1	0.85	1	0.85	1	0.85	1	0.85
	V5, V6	• below • above	1 1	1 0.71	1 0.71	1 0.71	1 0.71	0.85 0.71	0.85 0.71	0.85 0.71	0.85 0.71
MR CI	**B7**		1	1	1	1	1	0.85	0.85	–	–
	B8		0.85	1	0.85	1	0.85	1	0.85	–	–
	V5, V6	• above	1	1	1	1	1	0.85	0.85	–	–
R C2I	**B6**	$i_N \leqslant 28$	1	1	1	1	1	1	1	0.85	0.85
	B7		1	1	1	0.71	0.71	0.71	0.71	0.71	0.71
	V5, V6	• below • above	1 1	1 1	1 1	0.71 1	0.71 1	0.71 1	0.71 1	0.71 0.85	0.71 0.85
MR C2I	**B7**		1	1	1	1	1	1	1	0.85	0.85

Thermal factor ft_5 as dependent on air speed on the housing

Air speed ft/s	Working environment	ft_5
< 2	very small no air movement gear reducer shielded	Consult us
2	small and with limited air movement	0.71
3.15	large and without ventilation	0.90
4	large and with slight ventilation (e.g. gearmotor with self-cooled motor)	1.00
8	outdoor ventilated	1.18
12.5	strong air movement	1.32

1) (Durating of running on load [min] / 60)·100 [%].
2) For MR 2I, ft_3 = 1.
● Position of reference groove (see ch. 6).

4 - Thermal power *P*t [hp]

Fan cooling for helical and bevel helical gear reducers, respectively.
With double extension high speed shaft designs, (**... D**, **... H** and **... R**) both extensions are **accessible** even with fan fitted: **personal safety-guards are the Buyer's responsibility (2006/42/EC).**

5 – Selection

5.1 - Preliminary considerations

Motor power

Taking into account the efficiency of the gear reducer, and other drives – if any – motor power is to be as near as possible to the power rating required by the driven machine: accurate calculation is therefore recommended.

The power required by the machine can be calculated, seeing that it is related directly to the power-requirement of the work to be carried out, to friction (starting, sliding of rolling friction) and inertia (particularly when mass and/or acceleration or deceleration are considerable). It can also be determined experimentally on the basis of tests, comparisons with existing applications, or readings taken with amperometers or wattmeters.

An oversized motor would involve: a greater starting current and consequently larger fuses and heavier cable; a higher running cost as power factor (cos φ) and efficiency would suffer; greater stress on the drive, causing danger of mechanical failure, drive being normally proportionate to the power rating required by the machine, not to motor power.

In such cases, a detailed description of duty requirement must be made available: duration and frequency per hour of work cycle, acceleration and deceleration requirements if any, inertia, loads deriving from friction and work. In the absence of such data it is essential to provide all details which will permit their determination.

Only high values of ambient temperature, altitude, frequency of starting or other particular conditions require an increase in motor power.

Input speed n_1

For gear reducers, the maximum input speed, valid for **continuous duty S1**, is the one stated in the following table, according to train of gears and to gear reducer size; however, depending on the specific transmission ratio this limit may not be reacheable: for these cases, in the selection tables (see ch. 7, 9), the norminal power P_{N2} isn't stated and the given T_{N2} value is valid for the selection method type B (see ch. 5.2) only.

For intermittent duty or for particular needs, higher speeds may be possible, but always lower than values of n_{1peak}: consult us.

Peak speed is admitted for a maximum duration of 5s, including a proper rest period or a low speed period for the cooling of gear reducer, especially on high speed shaft side.

For variable n_1, the selection should be carried out on the basis of n_{1max}, but it should also be verified on the basis of n_{1min}.

When there is a belt drive between motor and gear reducer, different input speeds n_1 should be examined in order to select the most suitable unit from engineering and economy standpoints alike (our catalog favours this method of selection as it shows a number of input speed values n_1 relating to a determined output speed n_{N2} in the same section).

Input speed should not be higher than 1 800 rpm, unless conditions make it necessary; better to take advantage of the transmission, and use an input speed lower than 900 rpm.

5.2 - Gear reducer

Gear reducer size	Train of gear											
	I		2I		3I		CI		ICI		C2I	
	n_{1max} rpm	n_{1peak} rpm	n_{1max} rpm	n_{1peak} rpm	n_{1max} rpm	n_{1peak} rpm	n_{1max} rpm	n_{1peak} rpm	n_{1max} rpm	n_{1peak} rpm	n_{1max} rpm	n_{1peak} rpm
50	–	–	2 800	3 500	–	–	2 800	3 500	2 800	3 500	–	–
63, 64	2 800	3 500	2 800	3 500	2 800	3 500	2 800	3 500	2 800	3 500	–	–
80, 81	2 800	3 500	2 800	3 500	2 800	3 500	2 800	3 500	2 800	3 500	–	–
100	2 800	3 500	2 800	3 500	2 800	3 500	2 800	3 500	2 800	3 500	–	–
125	2 800	3 500	2 800	3 500	2 800	3 500	2 800	3 500	2 800	3 500	–	–
140	2 800	3 500	2 800	3 500	2 800	3 500	2 800	3 500	2 800	3 500	2 800	3 500
160	2 800	3 500	2 800	3 500	2 800	3 500	2 800	3 500	2 800	3 500	2 800	3 500
180	2 800	3 500	2 800	3 500	2 800	3 500	2 800	3 500	2 800	3 500	2 800	3 500
200	2 800	3 500	2 800	3 500	2 800	3 500	2 800	3 500	2 800	3 500	2 800	3 500
225	2 500	3 500	2 800	3 500	2 800	3 500	2 800	3 500	–	–	2 800	3 500
250	2 000	2 360	2 800	3 500	2 800	3 500	2 360	3 350	–	–	2 800	3 500
280	2 000	2 360	2 800	3 500	2 800	3 500	2 360	3 350	–	–	2 800	3 500
320, 321	1 800	2 360	2 000	2 360	2 800	3 500	2 000	2 800	–	–	2 360	3 500
360	1 800	2 360	2 000	2 360	2 800	3 500	2 000	2 800	–	–	2 360	3 500

For the determination of gear reducer size it is possible to procede in two different ways:

A) considering **the daily running time** (**h/d**);

B) considering the **total running duration** request L_h

Method A) is easier but more generic and requires a good knowledge of the applications; on the contrary, method B) is more accurate, but more complex.

Attention: Concerning above mentioned points, the gear reducer nominal performance calculated in the two different ways could slightly differ; in these cases, however, method B), as it is more precise, will be considered valid.

Method A - Determining the gear reducer size considering the daily running time (h/d)

– Fill in the selection questionnaire in all its parts at page 36; in particular, make available the power P_2 required at gear reducer output, the angular speeds n_2 and n_1, the running conditions (nature of load, daily running time **h/d**, frequency of starting ***z***, other considerations) referring to ch. 3.
– Determine service factor ***f***s on the basis of running conditions (ch. 3).
– Select the gear reducer size (also, the train of gears and transmission ratio ***i*** at the same time) on the basis of n_2, n_1 and of a power P_{N2} greater than or equal to $P_2 \cdot f$s (ch. 7 and 9).
– Calculate power P_1 required at input side of gear reducer using the formula P_2 / η where η = 0,98 – 0,92 is the efficiency of the gear reducer (ch. 6).

When for reasons of motor standardization, power P_1 applied at input side of gear reducer turns out to be higher than the power required (considering motor/gear reducer efficiency), it must be certain that this excess power applied will never be required, and frequency of starting ***z*** is so low as not to affect service factor (ch. 3).
Otherwise, make the selection by multiplying P_{N2} by P_1 applied / P_1 required.
Calculations can also be made on the basis of torque instead of power; this method is even preferable for low n_2 values.

Method B - Determining the gear reducer size considering the total running duration L_h

– Fill in the selection questionnaire in all its parts at page 36; in particular, make available the torque T_2, the angular speed n_2 required at gear reducer output, the running conditions (nature of load, **total running duration** foreseen L_h, frequency of starting ***z***, other considerations) referring to ch. 3.
– In presence of required torque M_2 and angular speed n_2 **variable in time**, according to a given load cycle, calculate the equivalent torque T_{2eq} and the equivalent angular speed n_{2eq} with the following formulae:

T_{2i}	[lb in] is the torque required (constant) in the interval *i*
n_{2i}	[rpm] is the output shaft speed (constant) during interval *i*
t_i	[s] is the duration of interval *i*
n_{2eq}	[rpm] is the equivalent speed in the cycle

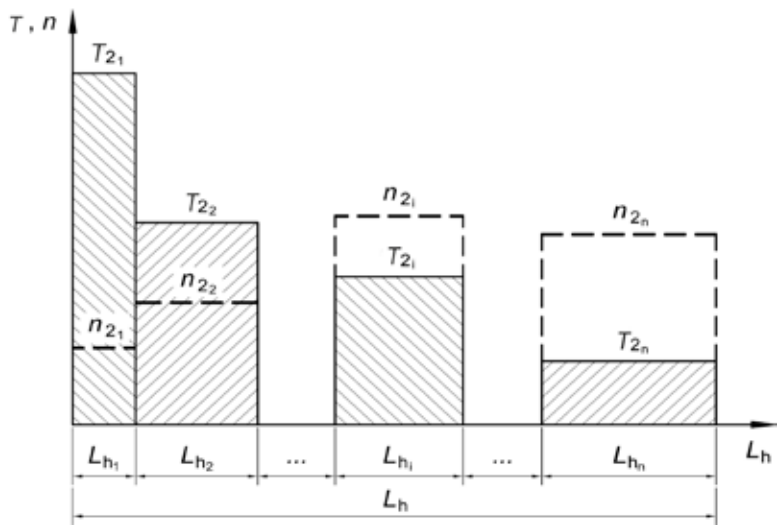

$$T_{2eq} = \sqrt[p]{\frac{T_{2_1}^p \cdot n_{2_1} \cdot L_{h_1} + T_{2_2}^p \cdot n_{2_2} \cdot L_{h_2} + \ldots + T_{2_i}^p \cdot n_{2_i} \cdot L_{h_i} + \ldots + T_{2_n}^p \cdot n_{2_n} \cdot L_{h_n}}{n_{2_{eq}} \cdot L_h}}$$

$$n_{2_{eq}} = \frac{n_{2_1} \cdot L_{h_1} + n_{2_2} \cdot L_{h_2} + \ldots + n_{2_i} \cdot L_{h_i} + \ldots + n_{2_n} \cdot L_{h_n}}{L_h}$$

where:

T_{2eq}	[lb in] is the load cycle equivalent torque
T_{2i}	[lb in] is the required torque (constant) on the low speed shaft during interval *i*
n_{2eq}	[rpm] is the load cycle equivalent speed
n_{2i}	[rpm] is the speed (constant) of the low speed shaft in the interval *i*
Lhi	[h] is the duration of interval *i*
Lh	[h] Lh1 + ... + Lhi + ...+ Lhn is the total duration of load cycle
p =	3,33 if $n_{2eq} \cdot L$h . value stated in the following table according to the train of gears
p =	6,61 if $n_{2eq} \cdot L$h < value stated in the following table according to the train of gears

$n_{2eq} \cdot L_h$ [rpm · h]					
R I	**R 2I**	**R 3I**	**R CI**	**R ICI**	**R C2I**
2 000 000	2 800 000	4 000 000	1 400 000	2 000 000	710 000

– Select the gear reducer size (also, the train of gears and trasmission ratio i at the same time) on the basis of $n_{N2} \cdot L_h$, i_N close to the values previously calculated and on the basis of a torque T_{N2} greater than or equal to $T_2 \cdot fs$ required (or $T_{2eq} \cdot fs$ required), see ch. 7 and 9.
– Calculate power P_1 required at input side of gear reducer using the formula P_2 / η where η = 0.98 – 0.92 is the efficiency of the gear reducer (ch. 6).

When for reasons of motor standardization, power P_1 applied at input side of gear reducer turns out to be higher than the power required (considering motor/gear reducer efficiency), it must be certain that this excess power applied will never be required, and frequency of starting z is so low as not to affect service factor (ch. 3).

Otherwise, make the selection by multiplying P_{N2} by P_1 applied P_1 required.

Attention. The values of P_{N2} highlighted in the selection tables with grey background are valid only for the value of n_{N2} specified and therefore they are to be ignored for whatever value of $n_2 \cdot L_h$.

Verifications

– Verify possible radial loads F_{r1}, F_{r2} and axial load F_{a2} by referring to instructions and values given in ch. 16.
– When a load chart is available, and/or there are overloads – due to starting on full load (especially with high inertias and low transmission ratios), braking, shocks, gear reducers in which the low speed shaft becomes driving member due to driven machine inertia, or other static or dynamic causes - verify that the maximum torque peak (ch. 6) is always less than **1.6 · T_{N2}**; if it is higher or cannot be evaluated in the above cases, install a safety device so that **1.6 · T_{N2} will never be exceeded**.
– Verify, when fs < 1, that torque T_2 is less than or equal to T_{N2} value valid for $n_1 \leqslant$ 90 rpm (see pages 107 and 195),
– Verify that input speed is lower than or equal to n_{1max} (see ch. 5.1);
– Verify **for each single interval *i*** of the eventual load cycle that the torque required T_{2i} is lower than **1.6** · T_{N2} and anyway never higher than T_{N2} valid for $n_1 \leqslant$ 90 rpm (see page 107 and 195) and that the input speed (relevant to the low speed shaft speed n_{2i}) is $n_{1i} \leqslant n_{1max}$ (see ch. 5.1);
– Verify, usually for sizes ⩾ 100, possible need for forced cooling (ch. 4 and 17).
– For gear reducers sizes 140, 180, 225, 280, 321, 360 with backstop device having particular i_N or low fs values, verify load capacity of backstop device according to the values given in the table «Backstop device load capacity» (ch. 17).

5.3 - Gearmotor

Determining the gearmotors size

– Fill in the selection questionnaire in all its parts at page 36; in particular, make available the necessary data: power P_2 required at gearmotor output, angular speed n_2, running conditions (nature of load, duration, frequency of starting z, other considerations), referring to ch. 3.
– Determine service factor fs on the basis of running conditions (ch. 3).
– Select the gearmotor size on the basis of n_2, fs and of a power P_1 greater than or equal P_2 (ch. 11, 13). If power P_2 required is the result of a precise calculation, the gearmotor should be selected on the basis of a power P_1 equal to or greater than P_2 / η, where η = 0.96 – 0.92 is gear reducer efficiency (ch. 6). The torque value T_2 stated in the tables (ch. 11, 13) has been calculated taking into account efficiency.

When for reasons of motor standardization, power P_1 available in catalog is much greater than the power P_2 required, the gearmotor can be selected on the basis of a lower service factor ($fs \cdot P_2 / P_1$) provided it is certain that this excess power available will never be required and frequency of starting z is low enough not to affect service factor (ch. 3).

Calculations can also be made on the basis of torque instead of power; this method is even preferable for low n_2 values.

Verifications

– Verify possible radial load F_{r2} and axial load F_{a2} referring to directions and values given in ch. 16.
– For the motor, verify frequency of starting z when higher than that normally permissible, referring to directions and values given in ch. 1.2; this will normally be required for brake motors only.
– Verify, in case of **motors supplied by the customer**, that the **static bending moment T_b** generated by motor weight on the counter flange of gear reducer is lower than the value allowed T_{bmax}, stated in the ch. 6.
Loads higher than permissible loads may be present in dynamical applications where the gearmotor is subjected to translations, rotations or oscillations: consult us for the study of every specific case
– When a load chart is available, and/or there are overloads – due to starting on full load (especially with high inertias and low transmission ratios), braking, shocks, gear reducers in which the low speed shaft becomes driving member due to driven machine inertia, or other static or dynamic causes - verify that the maximum torque peak (ch. 6 is always less than 1,6 · T_{N2} ($T_{N2} = T_2 \cdot fs$, see ch. 11 and 13); if it is higher or cannot be evaluated in the above cases, install a safety device so that **1.6 · T_{N2} will never be exceeded**.
– Verify, usually for P_1 ⩾ 40 hp, possible need for forced cooling (ch. 4 and 17).

5.4 - Selection questionnaire

For the collection of data and of all information necessary for a correct selection of gear reducer or gearmotor, fill in the questionnaire at the following page.

Attach technical specifications, if any, concerning the gear reducer or the gearmotor excluding other parts of the machine or of the plant.

When it is possible, attach the questionnaire with drawings, pictures and any further information useful to facilitate the best selection from a technical and economic point of view.

1 Conditions of application

Area of application/Industry sector

Type of machine to be driven

- ☐ new machine
- ☐ existing and running machine
- ☐ gear reducer in use

Ambient temperature [°F]

min	normal	max

Altitude [ft a.s.l.]

Ambient:

- ☐ normal (industrial) indoor
- ☐ normal (industrial) outdoor
- ☐ dusty
- ☐ corrosive / humid

Gear reducer position:

- ☐ tight space with insufficient air recycle (v_{air} < 2 ft/s)
- ☐ wide space with free air recycle (v_{air} ⩾ 4 ft/s)
- ☐ outdoor, protected against extremes of weather and radiation

2 Data of load

Output speed required [rpm]

min	nominal	max

Output torque required [lb in]

min	nominal	max

Power required on low speed shaft [hp]

min	nominal	max

Input speed (gear reducers) [rpm]

min	nominal	max

Nature of load:

- ☐ uniform
- ☐ moderate overloads
- ☐ heavy overloads

Frequency of starting [starts/h]

Moment of inertia of machine [lb ft^2]

min	normal	max

Running time [h/d]

Total duration [h]

Duty cycle (S1 ... S10)

Load cycle attached

- ☐ yes
- ☐ no

3 Motor

Motor type:

- ☐ asynchronous three-phase (a.c.)
- ☐ asynchronous three-phase + inverter
- ☐ d.c. + converter
- ☐ internal combust. (one - cylinder)
- ☐ internal combust. (multi-cylinder)

Power P_1 [hp]

min	nominal	max

Nominal speed n_1 [rpm]

min	nominal	max

A.c. motor supply:

voltage [V]	frequency [Hz]

IEC motor size (a.c. motor)

A.c. motor connection:

- ☐ direct
- ☐ Y / Δ
- ☐ soft starter / inverter

Electromagnetic brake

- ☐ parking
- ☐ working
- ☐ safety

Braking torque [lb in]

Starting torque [lb in]

Moment of inertia [lb ft^2]

Electric motor design (a.c. and d.c.):

- ☐ with fan cooling
- ☐ with encoder:
- ☐ with tachometer generator

Connection with gear reducer:

- ☐ with coupling
- ☐ with V-belt

section	No.	d_m [in]	d_1 [in]

- ☐ with toothed belt

section	No.	d_m [in]

Eventual limitation of drive overall dimensions

4 Gear reducer

Mounting position

Output shaft direction of rotation

- ☐ white arrow
- ☐ black arrow
- ☐ black and white arrow

Backstop device (if any)

- ☐ white arrow free rotation
- ☐ black arrow free rotation

Type of cooling admitted

- ☐ fan cooling
- ☐ coil
- ☐ internal heat exchanger
- ☐ unit UR O/A
- ☐ unit UR O/W

Type of connection to machine

- ☐ shaft mounting
- ☐ flexible / semi-flexible coupling
- ☐ universal coupling
- ☐ timing belt

pitch	d_m	d_1	φ

- ☐ chain

pitch	No.	z_2	z_3	overhang [in]	φ

- ☐ straight tooth helical gear pair

pitch	No.	z_2	z_3	overhang [in]	φ

Eventual axial load F_a [lb]

Eventual reduction of drive overall dimensions

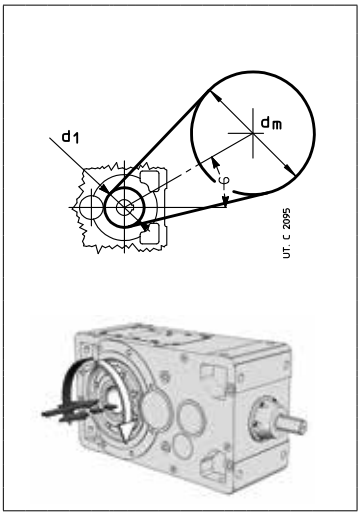

6 – Structural and operational details

Sound levels L_{WA} and L_{pA} 38
Gear ratio of input helical train of gears 38
Efficiency 38
Overload 39
Operation with brake motor 39
Angular backlash and torsional stiffness 40
Moment of inertia (of mass) WK_1^2 [lb ft^2] 40
Gear reducer input face 41
High and low speed shaft end 42
Reference groove 43
Plug dimensions 43
Filler and level plugs 43
Expansion tank (sizes 100 ... 360) 43
Cap overall dimension (sizes 63, 64, 125 and 140) 43
Reaction recess (2I, 3I, 4I sizes 40 ... 125) 44
Fastening tapped holes (sizes 125 ... 321) 44
Low speed shaft zone (sizes 140, 180, 225, 280, 360) 44
Directions of rotation 45
Bearing and/or gear pair forced lubrication: hydraulic circuit diagram 46
Bearing and/or gear pair forced lubrication with oil/air or oil/water independent cooling unit: hydraulic circuit diagram 47
Maximum bending moment of flange MR 48

Sound levels L_{WA} and $\bar{L}_{pA}$

Standard production sound power level L_{WA} [dB(A)][1] and mean sound pressure level $\bar{L}_{pA}$ [dB(A)][2] assuming nominal load, and input speed n_1 = 1 800[3] rpm. Tolerance +3 dB(A).

Gear reducer size	I				2I				3I, 4I				CI				ICI, C2I, C3I			
	$i_N \leqslant 3.55$		$i_N \geqslant 4$		$i_N \leqslant 14$		$i_N \geqslant 16$		$i_N \leqslant 90$		$i_N \geqslant 100$		$i_N \leqslant 18$		$i_N \geqslant 20$		$i_N \leqslant 80$ (ICI) $i_N \leqslant 71$ (C2I)		$i_N \geqslant 100$ (ICI, C3I) $i_N \geqslant 80$ (C2I)	
	L_{WA}	$\bar{L}_{pA}$	L_{WA}	$\bar{L}_{pA}$	L_{WA}	$\bar{L}_{pA}$	L_{WA}	$\bar{L}_{pA}$	L_{WA}	$\bar{L}_{pA}$	L_{WA}	$\bar{L}_{pA}$	L_{WA}	$\bar{L}_{pA}$	L_{WA}	$\bar{L}_{pA}$	L_{WA}	$\bar{L}_{pA}$	L_{WA}	$\bar{L}_{pA}$
40, 50	–	–	–	–	**77**	68	**74**	65	**73**	66	–	–	**75**	66	**73**	64	**73**	64	**73**	64
63, 64	**85**	76	**81**	72	**80**	71	**77**	68	**76**	66	**74**	64	**78**	69	**75**	66	**75**	66	**75**	66
80, 81	**88**	79	**84**	75	**83**	74	**80**	71	**79**	69	**77**	67	**81**	72	**77**	68	**77**	68	**77**	68
100	**91**	82	**87**	78	**86**	77	**83**	74	**82**	72	**80**	70	**84**	75	**80**	71	**80**	71	**78**	69
125, 140	**94**	85	**90**	81	**89**	79	**86**	76	**85**	75	**82**	72	**87**	78	**82**	73	**84**	74	**81**	71
160, 180	**97**	88	**93**	84	**92**	81	**89**	78	**88**	77	**85**	74	**90**	81	**85**	76	**86**	76	**84**	73
200, 225	**101**[4]	91[4]	**97**[4]	87[4]	**95**	84	**92**	81	**91**	80	**88**	77	**94**	84	**89**	79	**89**	78	**86**	75
250, 280	**104**[4]	94[4]	**100**[4]	90[4]	**98**	87	**95**	84	**94**	83	**91**	80	**96**	86	**91**	81	**92**	81	**90**	78
320 ... 360	**108**[4]	98[4]	**104**[4]	94[4]	**102**	91	**99**	88	**98**	87	**95**	84	**100**	90	**95**	85	**95**	84	**93**	82

1) To ISO 8579-1.
2) Mean value of measurement at 1 m from external profile of gear reducer standing in free field on a reflecting surface.
3) For n_1 710 – 1 400 rpm, modify tabulated values: thus n_1 = 710 rpm, -5 dB(A); n_1 = 900 rpm, -4 dB(A); n_1 = 1 120 min^{-1}, -3 dB(A); n_1 = 1 400 rpm, -2 dB(A).
4) For sizes R I 225, 280 and 360, increase values of 1 dB(A).

In case of gearmotor (motor supplied by Rossi) add 1 dB(A) to the values in the table for 4 poles 60 Hz motors.

If required, gear reducers can be supplied with reduced sound levels (normally 3 dB(A) less than tabulated values): consult us.

In case of gear reducers with fan cooling, add to the values in the table 3 dB(A) for 1 fan and 5 dB(A) for 2 fans.

Gear ratio of input helical train of gears

The partial transmission ratio of input helical train of gears is given in the table; this ratio may be useful when calculating the speed of the intermediate shaft extension for **... D** design (see ch. 8, 10, 12, 14).

Gear reducer size	Gear ratio of input helical train of gears									
	Gear ratio		**Gearmotors** Motor size							
	$i_N \leqslant 80$	$i_N \geqslant 100$	**63, 71B5R**	**71, 80 B5R**	**80, 90 B5R**	**90, 100 B5R, 112 B5R**	**100, 112, 132 B5R**	**132, 160 B5R**	**160, 180, 200 B5R**	**200, 225**
3I 40			2.41	–	–	–	–	–	–	–
3I 50			2.59	1.89	–	–	–	–	–	–
3I 63, 64 ICI 40, 50	3.12		3.5	2.54	2.03	–	–	–	–	–
4I 63, 64 C3I 40,50	–		10.9	7.91	–	–	–	–	–	–
3I, ICI 80, 81 ICI 63, 64	3.18		–	3.18 (3.8)[1]	2.54	2	–	–	–	–
4I, C3I 80, 81 C3I 63, 64	–		–	10.1 (12.1)[1]	8.08	–	–	–	–	–
3I, ICI 100	3.18	6.38	–	–	3.18 (3.8)[1]	2.54	2	–	–	–
4I, C3I 100	–	–	–	–	10.1 (12.1)[1]	8.08	–	–	–	–
3I, ICI 125 ICI 140	3.13	6.36	–	–	–	3.13 (3.86)[1]	2.54 (3.13)[2]	2.03	–	–
4I, C3I 125	–	–	–	–	–	9.77 (12.1)[1]	7.92	–	–	–
ICI 160, 180	3.17	6.38	–	–	–	–	3.17 (4)[1]	2.56	2 (2.56)[3]	–
ICI 200	3.17	6.38	–	–	–	–	–	3.17 (3.8)[1]	2.56 (3.17)[2]	2 (2.56)[3]

1) Values valid for trains of gears: **3I** with $i_N \geqslant 100$, **ICI** with $i_N \geqslant 100$, **4I** with $i_N \geqslant 315$, **C3I** with $i_N = 400$.
2) Values valid for trains of gears: **3I** with $i_N = 80$, **ICI** with $i_N \geqslant 80$.
3) Values valid for train of gears: **ICI** with $i_N \geqslant 63$.

Efficiency

The efficiency stated in the table is indicative and referred to nominal running conditions (torque, speed, temperature); it is necessary to keep in mind that the efficiency value can diminish considerably for values of $T_2 \ll T_{N2}$

Model	Nominal efficiency η			
	I	**2I, CI**	**3I, ICI, C2I**	**C3I, 4I**
2, 3	0.98	0.96	0.94	0.92
4	–	0.95	0.935	–

Overloads

When a gear reducer is subjected to high static and dynamic overloads, the need arises for verifying that such overloads will always remain lower than **1.6 · T_{N2}** (see ch. 7, 9; see ch. 11, 13 where $T_{N2} = T_2 \cdot fs$).

Overloads are normally generated when one has:

– starting on full load (especially for high inertias and low transmission ratios), braking, shocks;

– gear reducers in which the low speed shaft becomes driving member due to driven machine inertia;

– applied power higher than that required; other static or dynamic causes.

The following general observations on overloads are accompanied by some formulae for carrying out evaluations in certain typical instances.

Where no evaluation is possible, install safety devices which will keep values within **1.6 · T_{N2}**.

Starting torque

When starting on full load (especially for high inertias and low transmission ratios) verify that **1.6 · T_{N2}** is equal to or greater than starting torque, by using the following formula:

$$T_2 \text{ start} = \left(\frac{T \text{ start}}{T_N} \cdot T_2 \text{ available} - T_2 \text{ required}\right) \frac{WK_R^2}{WK_R^2 + WK_0^2} + T_2 \text{ required}$$

where:

T_2 required is the torque absorbed by the machine through work and frictions;

T_2 available is the output torque due to motor nominal power;

WK_0^2 is the moment of inertia (of mass) of the motor;

WK_R^2 is the external moment of inertia (of mass) in kg m² (gear reducers, couplings, driven machine) referred to the motor shaft;

NOTE: when seeking to verify that starting torque is sufficiently high for starting, take into account starting friction, if any, in evaluating T_2 required.

Stopping machines with high kinetic energy (high moments of inertia combined with high speeds) with brake motor

Verify braking stress by means of the formula:

$$\left(\frac{Tf}{\eta} \cdot i + T_2 \text{ required}\right) \frac{WK_R^2}{WK_R^2 + WK_0^2} - T_2 \text{ required} < 1.6 \cdot T_{N2}$$

where:

Tf is the braking torque setting (see table in ch. 1.2); for other symbols see above and ch. 1.

Operation with brake motor

Starting time ta and revolutions of motor φa_1

$$ta = \frac{(WK_0^2 + WK_R^2) \cdot n_1}{25.603 \left(T \text{ start} - \frac{T_2 \text{ required}}{i}\right)} \text{ [s]}; \qquad \varphi a_1 = \frac{ta \cdot n_1}{19.1} \text{ [rad]}$$

Braking time tf and revolutions of motor φf_1

$$tf = \frac{(WK_0^2 + WK_R^2) \cdot n_1}{25.603 \left(Tf + \frac{T_2 \text{ required}}{i}\right)} \text{ [s]}; \qquad \varphi f_1 = \frac{tf \cdot n_1}{19.1} \text{ [rad]}$$

where:

T start [lb in] is motor starting torque $\left(\frac{63030 \cdot P_1}{n_1} \cdot \frac{T \text{ start}}{M_N}\right)$ (see ch. 1.2);

Tf [lb in] is the braking torque setting of the motor (see ch. 1.2);

for other symbols see above and ch. 1.

Assuming a regular air-gap and ambient humidity, and utilizing suitable electrical equipment, repetition of the braking action, as affected by variation in temperature of the brake and by the state of wear of friction surface, is approx ± 0.1 · φf_1.

Friction surface life

As a rough guide (see specific literature), the number of braking permissible between successive adjustments of the air-gap is given by the formula $\frac{W \cdot 10^5}{Tf \cdot \varphi b_1}$

where:

W [10^6 · lb in] is the work of friction between successive adjustments of the airgap as indicated in the table; for other symbols see above.

The air-gap should measure between min 0.25 and max 0.6; as a rough guide, 5 adjustments can be made.

Motor size	W [10^6 · lb in]
63	93.8
71	124
80	159
90	212
100	212
112	398
132	593
160, 180M	796
180L, 200	1 106

Angular backlash and torsional stiffness

A rough guide for the angular backlash (high speed shaft being locked) is given in the table. It varies according to temperature and transmission ratio.

Also the **approx.** values for low speed shaft torsional stiffness – high speed shaft being locked – are given in the table according to the train of gears.

The values stated in the table, since necessarily estimated, are to be considered valid for long model too. On request, gear reducers with **reduced backlash** lower than or equal to the minimum table values are available.

Gear reducer size	Angular backlash[1]				Torsional stiffness[2]			
	[rad]		[arcmin]		[lb in / arcmin]			
	min	max	min	max	**I**	**2I, CI**	**3I, ICI, C2I**	**4I, C3I**
40	0.0043	0.0085	15	29	–	42.5	21.2	–
50	0.0036	0.0071	12	24	–	75	42.5	25
63	0.0028	0.0056	9.6	19	280	160	87.5	50
64	0.0028	0.0056	9.6	19	315	170	95	50
80	0.0025	0.0050	8.6	17	560	315	175	100
81	0.0025	0.0050	8.6	17	630	335	190	100
100	0.0020	0.0040	6.9	14	1 120	615	355	200
125	0.0017	0.0034	5.8	12	2 240	1 250	710	400
140	0.0017	0.0034	5.8	12	3 150	1 750	1 000	–
160	0.0016	0.0032	5.5	11	4 370	2 500	1 400	–
180	0.0016	0.0032	5.5	11	6 300	3 550	2 000	–
200	0.0015	0.0030	5.2	10	8 750	5 000	2 800	–
225	0.0015	0.0030	5.2	10	12 500	7 100	4 000	–
250	0.0014	0.0028	4.8	9.6	17 500	10 000	5 600	–
280	0.0014	0.0028	4.8	9.6	25 000	14 000	8 000	–
320, 321	0.0013	0.0026	4.5	8.9	35 500	20 000	11 200	–
360	0.0013	0.0026	4.5	8.9	50 000	28 000	16 000	–

1) 1 rad = 3438'.
2) Values valid in condition of nominal load.

Moment of inertia (of mass) WK_1^2 [lb ft²]

Train of gear	Gear reducer size										
i_N	**100**	**125**	**140**	**160**	**180**	**200**	**225**	**250**	**280**	**320, 321**	**360**
I											
2 ... 2,5	0.062	0.202	–	0.710	–	2.014	–	6.216	–	21.183	–
2,8 ... 3,15	0.048	0.162	0.261	0.565	0.948	1.584	2.755	4.910	8.102	16.596	28.230
3,55 ... 4	0.036	0.107	0.202	0.397	0.734	1.107	2.071	3.404	6.173	11.572	21.359
4,5 ... 5	0.026	0.081	0.135	0.311	0.506	0.841	1.456	2.591	4.330	8.784	15.069
2I											
6,3 ... 12,5	0.021	0.069	0.074	0.216	0.242	0.694	0.772	2.121	2.344	6.679	7.501
6,3 ... 12,5[1]	0.033	0.102	0.107	0.316	0.342	1.021	1.100	3.038	3.261	9.423	10.245
14 ... 28	–	0.033	0.040	0.109	0.131	0.359	0.439	1.230	1.344	3.439	4.150
14 ... 28[1]	–	0.052	0.059	0.159	0.204	0.513	0.594	1.684	1.798	4.705	6.069
3I											
28 ... 63	–	–	–	0.045	0.048	0.143	0.150	0.430	0.451	1.423	1.276
28 ... 63[1]	–	–	–	0.055	0.057	0.176	0.183	0.523	0.544	1.698	1.368
71 ... 160	–	–	–	0.021	0.021	0.064	0.067	0.197	0.202	0.641	0.589
71 ... 160[1]	–	–	–	0.024	0.024	0.074	0.074	0.221	0.226	0.720	0.613
CI											
4 ... 8	0.031	0.090	0.100	0.292	0.325	0.876	0.983	2.596	3.043	8.010	9.511
9 ... 11,2	0.021	0.059	0.078	0.171	0.249	0.530	0.762	1.677	2.378	5.259	7.473
12,5 ... 16	–	0.036	0.043	0.121	0.145	0.375	0.444	1.192	1.399	3.553	4.582
18, 20	–	0.019	0.024	0.069	0.083	0.202	0.242	0.663	0.779	2.708	3.133
25 ... 31,5	–	–	–	0.038	–	0.112	–	0.375	–	–	–
C2I											
20 ... 31,5	–	–	–	0.093	0.100	0.297	0.316	0.891	0.945	2.686	2.884
35,5 ... 63	–	–	–	0.040	0.043	0.131	0.138	0.409	0.425	1.302	1.363
71 ... 100	–	–	–	0.017	0.017	0.059	0.062	0.176	0.181	0.570	0.589
125 , 160	–	–	–	0.010	0.010	0.031	0.031	0.090	0.093	0.316	0.323
ICI											
31,5 ... 80	–	–	–	0.024	0.026	0.076	–	–	–	–	–
100 ... 200	–	–	–	0.012	0.012	0.036	–	–	–	–	–

1) Values valid for long model.

Gear reducer input face

Following gear reducers have a machined surface and threaded holes for an eventual motor support etc. on gear reducer input side (also on opposite side for R I, R 2I sizes ⩾ 140, R 3I sizes ⩾ 140, model 4 excluded, R CI, R C2I).

R 2I 50 ... 125
R CI 50 ... 100

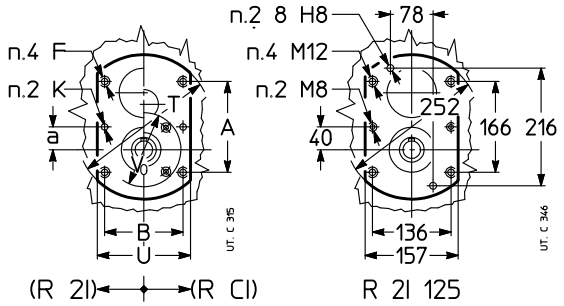

Gear reducer size R 2I	R CI	a	A	B	F 1)	K Ø H8 2)	T Ø	U
50	**–**	16	72	54	M 5	5	103	66
63, 64	**50**	20	81.5	66.5	M 5	5	119	80
80, 81	**63 ... 81**	25	106	80	M 6	6	149	96
100	**100**	31.3	125	108	M 8	8	187	129

1) Working length of thread 2 · F.
2) Working length of thread 1.6 · K.
For dimension V_0 (R CI only) see ch. 10.

R I 125 ... 360
R 2I 140 ... 360
R 3I 140 ... 360
R CI 125 ... 360
R C2I 140 ... 360

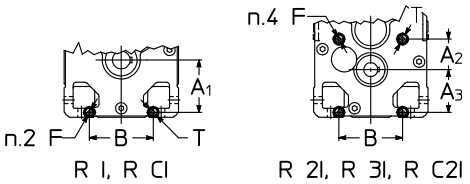

Gear reducer size R I, R CI	R 2I, R 3I, R C2I	A_1	A_2	A_3	B	F Ø 1)	T
125, 140	**140**	138	81	113	162	M 12	25
160, 180	**160, 180**	165	96	135	201	M 16	32
200, 225	**200, 225**	207	115	162	250	M 20	40
250, 280	**250, 280**	258	143	203	310	M 24	48
320 ... 360	**320 ... 360**	327	180	252	386	M 30	60

1) Working length of thread 1.25 · F.
If spigot is required, consult us.

The input face of gear reducers have a **machined flange** and **holes** for eventual motor fastening etc.

R 3I 63 ... 125
R ICI 50 ... 200

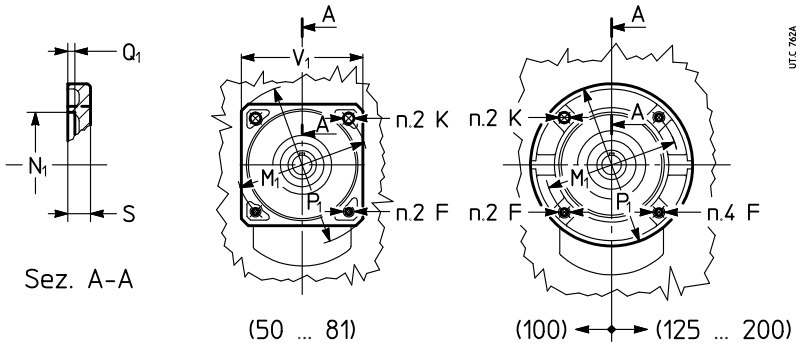

Gear reducer size R 3I	R ICI	F 1)	K Ø	M_1 Ø	N_1 Ø H7	P_1 Ø	V_1 □	Q_1	S
63, 64	**50**	M 8	9.5	115	95	140	105	4	11
80, 81	**63 ... 81**	M 8	9.5	130	110	160	120	4.5	12
100	**100**	M 10	11.5	165	130	200	–	4.5	14
125	**125, 140**	M 10	–	165	130	200	–	4.5	16
–	**160, 180**	M 12	–	215	180	250	–	5	18
–	**200**	M 12	–	265	230	300	–	5	20

1) Working length of thread 1.25 · F.

High and low speed shaft end

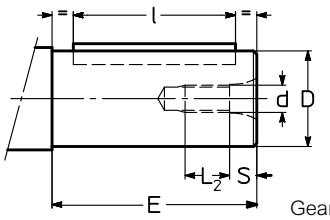

Gear reducer shaft

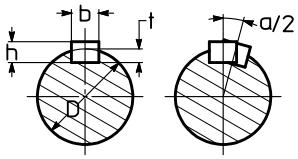

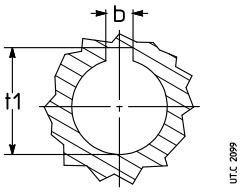

Machine shaft

Shaft end								Key		Keyway		
D Ø 3)		**E**[1]		**d** Ø	**S**	**L**$_2$[1]		α/2[2] arc min	**b** × **h** × **l**[1] h9 h11	**b** H9 hub N9 shaft	**t** shaft	**t**$_1$ hub
11	j 6	23		M 5	3.6	9.4		–	4 × 4 × 18	4	2.5	12.7
14	j 6	30		M 6	4.6	11.4		–	5 × 5 × 25	5	3	16.2
16	j 6	30		M 6	4.6	11.4		–	5 × 5 × 25	5	3	18.2
19	j 6	40	(30)	M 6	4.6	11.4	(13.4)	5.43	6 × 6 × 36 (25)	6	3.5	21.8
24	j 6	50	(36)	M 8	5.9	15.1	(17.1)	5.16	8 × 7 × 45 (25)	8	4	27.2
28	j 6	60		M 8	5.9	15.1		–	8 × 7 × 45	8	4	31.2
30	–	58		M 10	7.6	20.4		4.13	8 × 7 × 45	8	4	33.2
32	k 6	80	(58)	M 10	7.6	18.4	(20.4)	3.87	10 × 8 × 70 (50)	10	5	35.3
38	k 6	80	(58)	M 10	7.6	18.4	(20.4)	3.27	10 × 8 × 70 (50)	10	5	41.3
40	–	58		M 10	7.6	20.4		3.7	12 × 8 × 50	12	5	43.3
42	k 6	110		M 12	9.5	22.5		–	12 × 8 × 90	12	5	45.3
45	k 6	110		M 12	9.5	22.5		–	14 × 9 × 90	14	5.5	48.8
48	k 6	110	(82)	M 12	9.5	22.5	(26.5)	3.08	14 × 9 × 90 (70)	14	5.5	51.8
55	m 6	110		M 12	9.5	22.5		–	16 × 10 × 90	16	6	59.3
60	m 6	140	(105)	M 16	12.7	27.3	(35.3)	2.46	18 × 11 × 110 (90)	18	7	64.4
70	m 6	140	(105)	M 16	12.7	27.3	(35.3)	2.55	20 × 12 × 125 (90)	20	7.5	74.9
75	m 6	140		M 16	12.7	27.3		–	20 × 12 × 125	20	7.5	79.9
80	–	130		M 20	16	44		2.23	22 × 14 × 110	22	9	85.4
90	m 6	170	(130)	M 20	16	34	(44)	1.99	25 × 14 × 140 (110)	25	9	95.4
95	m 6	170		M 20	16	34		–	25 × 14 × 140	25	9	100.4
100	–	165		M 24	19	41		1.79	28 × 16 × 140	28	10	106.4
110	m 6	210	(165)	M 24	19	41		1.63	28 × 16 × 180 (140)	28	10	116.4
125	–	200[4]		M 30	22	45		1.71	32 × 18 × 180	32	11	132.4
140	–	200		M 30	22	45		1.52	36 × 20 × 180	36	12	148.4
160	–	240		M 36	27	54		1.33	40 × 22 × 220	40	13	169.4
180	–	240		M 36	27	54		1.18	45 × 25 × 220	45	15	190.4

1) Values in brackets are for short shaft end.
2) Maximum angular misalignement between double extension shaft keys.
3) Tolerance valid only for high speed shaft ends. For low speed shaft ends see ch. 17 (1) and (2).
4) Value **not to** standard.

Hollow low speed shafts

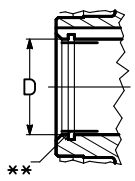

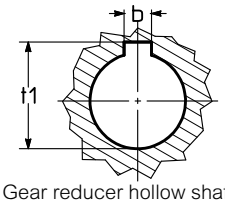

Gear reducer hollow shaft

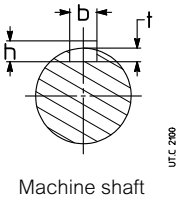

Machine shaft

Hole	Parallel key	Keyway		
D Ø H7	**b** × **h** × **l** h9 h11	**b** H9 hub N9 shaft	**t** shaft	**t**$_1$ hub
19	6 × 6 × 50	6	3.5	21.8
24	8 × 7 × 63	8	4	27.3
30	8 × 7 × 63	8	4.5[1]	32.7[1]
32	10 × 8 × 70	10	5	35.3
38	10 × 8 × 90	10	5.5[1]	40.7[1]
40	12 × 8 × 90	12	5	43.3
48	14 × 9 × 110	14	5.5	51.8
60	18 × 11 × 140	18	7	64.4
70	20 × 12 × 180	20	8[1]	74.3[1]
80	22 × 14 × 200	22	9	85.4
90	25 × 14 × 200	25	9	95.4
100	28 × 16 × 250	28	10	106.4
110	28 × 16 × 250	28	10	116.4
125	32 × 18 × 320	32	11	132.4
140	36 × 20 × 320	36	12	148.4
160	40 × 22 × 400	40	14[1]	168.3[1]
180	45 × 25 × 400	45	15	190.4

* Recommended length.
** Each hollow shaft type (standard, stepped, with shrink disc) has a slightly oversized diameter **D** (at the input) to facilitate the assembly of gear reducer on machine shaft end: this, however, does not affect the connection reliability.
1) Values **not to** standard.

6 - Structural and operational details

Reference groove

The reference for identification of the hollow low speed shaft side opposite to which it is advisable to apply the radial load, is provided by a groove as shown in the drawing below. The position of the reference groove is identified by the symbol ● in the drawings «Design» of ch. 8, 10, 12 and 14.

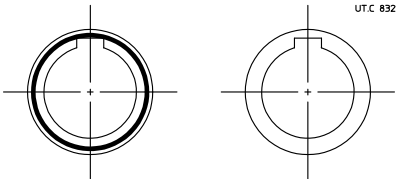

groove side ● opposite side to groove

Plug dimensions

Gear reducer size	40, 50	63 ... 81	100 ... 140	160 ... 280	320 ... 360
Size threaded holes	G 1/4”	M16 × 1,5	G 1/2”	G 3/4”	G 1”
Tightening torque lb in	62	124	124	124	220

Filler and level plugs

2I, 3I, 4I (100, 125)
mounting position **V6**

3I (125)
mounting position **V5**[1)]

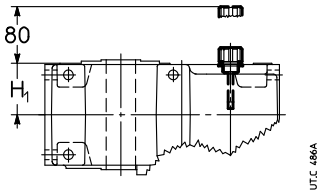

ICI (100 ... 200)
mounting position **B6**[1)]

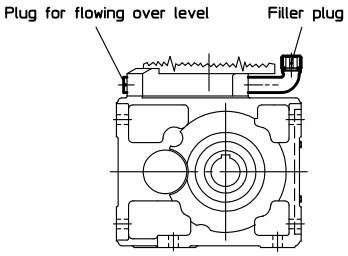

C3I (100 ... 125)
mounting position **B6**[1)]

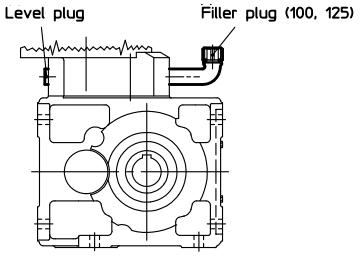

1) For high speed continuous duty an expansion tank is envisaged: consult us.

Expansion tank (sizes **100 ... 360**)

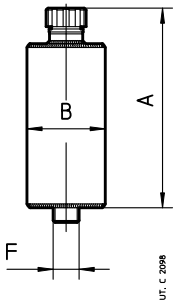

Gear reducer size	A	B	F	Plug
100 ... 140	131	46	G1/2”	1/2”
160 ... 280	205	80	G3/4”	3/4”
320 ... 360	230	102	G1”	1”

Cap overall dimension (sizes **63, 64, 125 and 140**)

In the gear reducers and gearmotors stated in the table, the cap opposite to high speed shaft overhangs of 4 mm from H_1 dimension (see ch. 8,10, 12, 14), due to backstop device pre-arrangement.

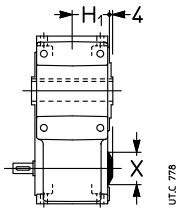

Gear reducer size		X Ø
63, 64	**R 2I, 3I and MR 2I, 3I, 4I**	47
125	**R 2I, 3I and MR 2I, 3I, 4I**	72
140	**R 2I and MR 2I**	72

Fastening tapped holes (sizes 125 ... 321)

The relevant through holes to be realized on the driven machine must be all of equal diameter for sizes 140, 200 and 250 (Ø 15, Ø 21 and Ø 25, respectively) as the 2 holes of smaller diameter are not in the position of 22° 30'.

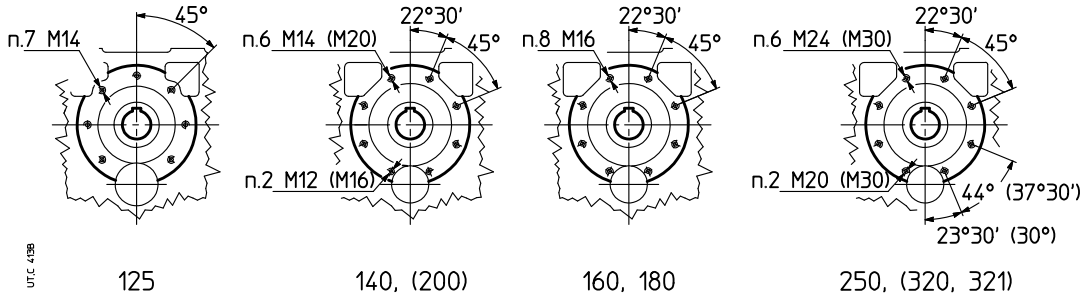

Reaction recess (2I, 3I, 4I sizes 40 ... 125)

Sizes 2I, 3I, 4I 40 ... 125 have a housing with a reaction recess having machined lateral surfaces, laying on the high speed side (opposite to groove), for the seating of springs and torque arm end for shaft mounting (see ch. 17 «Shaft mounting arrangements»).

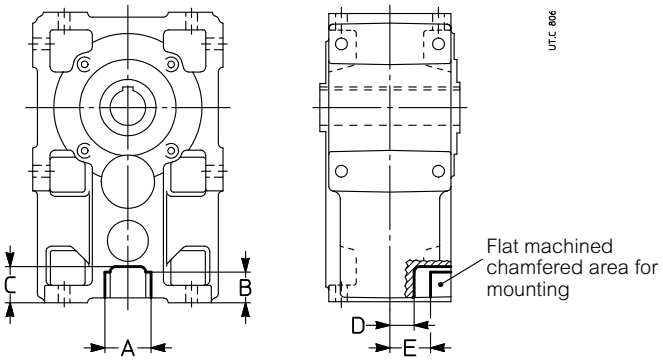

Gear reducer size	A H11	B	C ≈	D	E
40	23	18.5	22	14	25
50	29.7	23.5	26	15.5	28
63, 64	32.5	25.5	31	22.5	36.5
80, 81	45.8	27	36	27	41
100	63	27	38.5	36	54.5
125	67	37	52	46	64

Low speed shaft zone (sizes 140, 180, 225, 280, 360)

In standard model helical gear reducers the perspective pulley, if mounted against shaft shoulder (always advisable), can have a maximum diameter of:

– **R I**, at the distance of H1 + Q + 3 (ch. 8), 115 (size 140), 150 (size 180), 180 (size 225), 230 (size 280), 300 (size 360).

– **R 2I**, **R 3I**, at the distance H1 + Q + 3 (ch. 8), 315 (size 140), 400 (size 180), 500 (size 225), 630 (size 280), 800 (size 360).

The use of pulleys with larger diameter is allowed on condition that they don't overhang from the shaft end and provided that the maximum radial load values are observed (see ch.16); consult us if need be.

Helical gear reducers
(I 140, 180, 225, 280, 360)

Helical gear reducers
(2I, 3I 140, 180, 225, 280, 360)

Directions of rotation

The correspondence between the high speed shaft (of gear reducer or gearmotor) and low speed shaft is stated at ch. 8, 10, 12, 14 according to design and train of gears. For the interpretation of arrows, refer to the following 3D sketchs.

Helical gear reducer R 2I UP2A

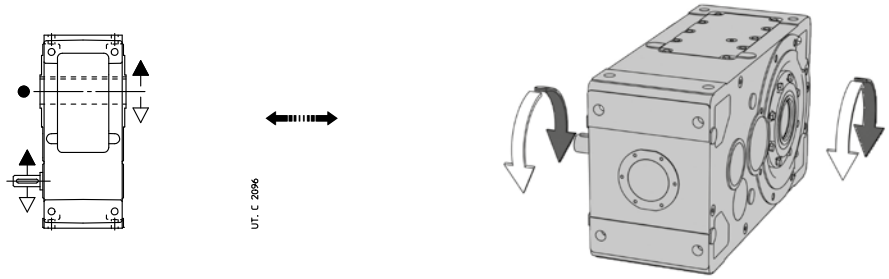

Bevel helical gear reducer R CI UO2D

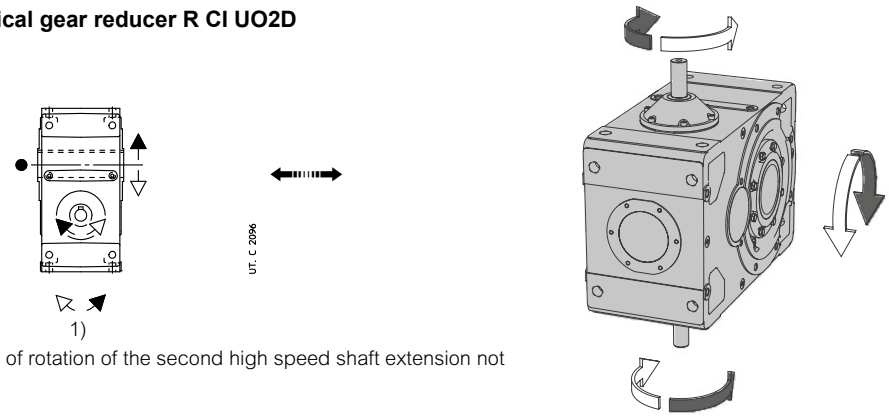

1) Direction of rotation of the second high speed shaft extension not in view.

Bevel helical gearmotor MR C2I UO2A

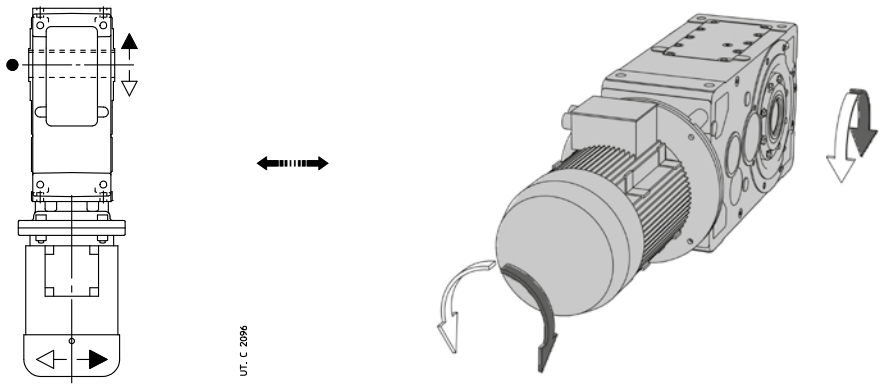

Bearing and/or gear pair forced lubrication: hydraulic circuit diagram

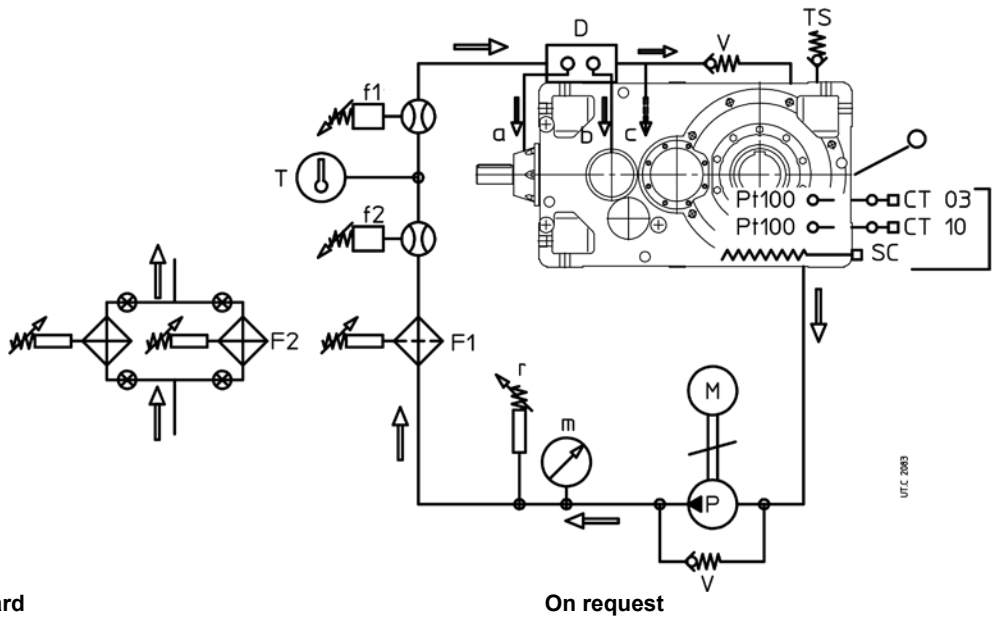

Standard

a, b, c	Gear pair/bearing pipes
m	Pressure gauge (0 – 16 bar)
M	Motor pump
P	Pump
T	Thermometer
V	Safety valve
r	Minimum pressure gauge
TS	Filler plug
D	Distributor
◒	Oil level (approximate)

On request

Pt 100*	Oil temperature probe (loose)*
f1	Electric flow switch: vertical mounting
f2	Visible flow switch
F1	Filter
F2	Exchange filters
CT03*, CT10*	Signalling device (loose)*
SC*	Heater

* On request, but necessary for gear reducer starting with $T_{ambient}$ (= T_{oil}) ≤ 77 °F (25 °C): preheat the oil with the heater.

NOTES:

The bearings and/or the gear pairs to be forced lubricated are defined by Rossi according to gear reducer and application.

CT03: set the operating threshold at 122 °F (50 °C) (stopping the heater supply) and the reset threshold at 86 °F (30 °C).

CT10: set the operating threshold at 86 °F (30 °C) to start gear reducer and motor pump; set the reset threshold at 50 °F (10 °C) and the safety threshold at 194 °F (90 °C).

For the gear reducer starting at $T_{ambient}$ (= T_{oil}) ≤ 32 °F (0 °C) the same logic is valid, but the devices CT03 and CT10 must be set according to the real ambient temperature.

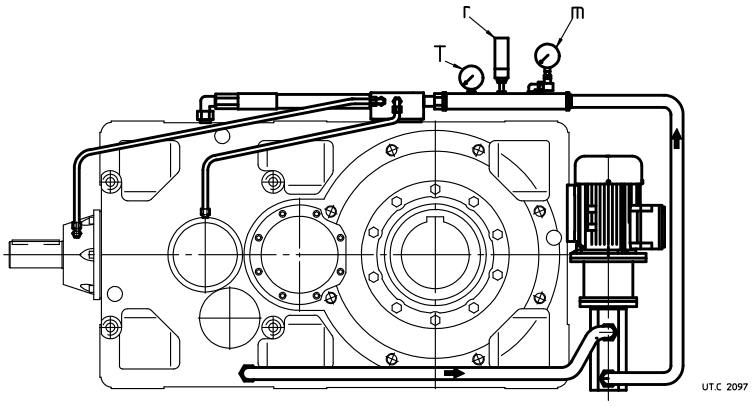

Sketch of forced lubrication with motor pump; the exact position of motor pump depends on the gear reducer size, train of gears, mounting position and available overall dimensions: for this reason, on request, a drawing of the specific solution will be supplied; the pipes will be realized with suction and delivery flexible pipes and with rigid pipes between the distributor and the bearings.

Bearing and/or gear pair forced lubrication with oil/air or oil/water independent cooling unit: hydraulic circuit diagram

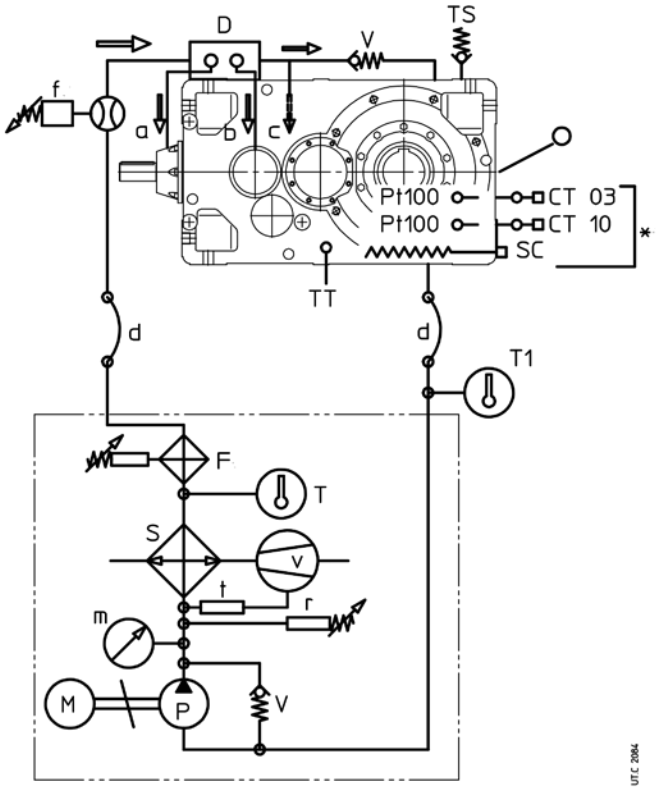

Standard

a, b, c	Gear pair/bearing pipes
d	Flexible connection (by Buyer)
m	Pressure gauge (0 – 16 bar)
M	Motor pump
P	Pump
S	Oil/air or oil/water exchanger
v	Motor fan (UR O/A...)
t	Fan thermostat 32 – 194 °F (0 – 90°C) (UR O/A...)
T	Thermometer 32 - 248 °F (0 – 120°C)
V	Safety valve
r	Minimum pressure gauge
TS	Filler plug
D	Distributor
	Oil level (approximate)

On request

Pt 100*	Oil temperature probe (loose)*
f	Flow switch (loose)
F	Filter with eletric blockage warning (with UR O/A... loose)
CT03* CT10*	Signalling device (loose)*
T1	Thermometer 32 - 248 °F (0 – 120°C)
TT	Bi-metal type thermometer
SC*	Heater

***** On request but necessary for gear reducer starting with $T_{ambient}$ (= T_{oil}) ≤ 77 °F (25 °C): preheat the oil with heater.

NOTES:

Bearings and/or gear pairs to be forced lubricated are defined by Rossi according to gear reducer and application.

CT03: set the operating threshold at 122 °F (50 °C) (stopping the heater supply) and the reset threshold at 86 °F (30 °C).

CT10: set the operating threshold at 86 °F (30 °C) to start gear reducer and motor pump; set the reset threshold at 50 °F (10 °C) and the safety threshold at 194 °F (90 °C).

For gear reducer starting with $T_{ambient}$ (= T_{oil}) ≤ 32 °F (0 °C) the same logic is valid, but the devices CT03 and CT10 must be set according to the real ambient temperature.

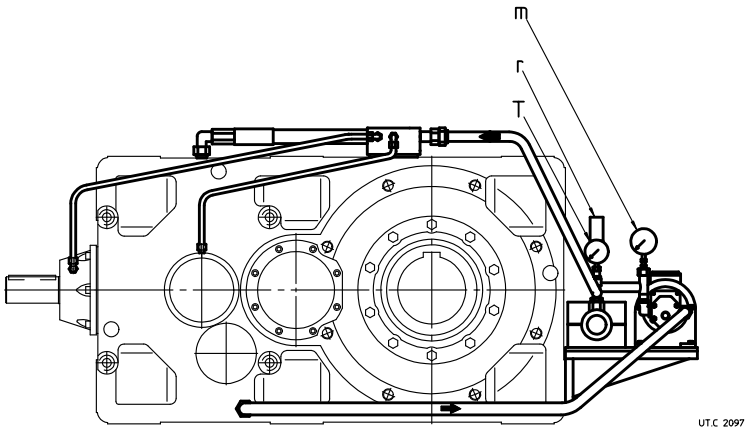

Sketch of forced lubrication with cooling unit; the exact position of cooling unit depends on the gear reducer size, train of gears, mounting position and available overall dimensions: for this reason, on request, a drawing of the specific solution will be supplied; the pipes will be realized with suction and delivery flexible pipes and with rigid pipes between the distributor and the bearings.

Maximum bending moment of flange MR

In case of assembly of motors supplied by the customer, verify that the static bending moment T_b generated by motor weight on the counter flange of gear reducer is lower than the value allowed T_{bmax}, stated in the table:

$$T_b \leqslant T_{bmax}$$

where:

T_b = G · (X + HF) / 1000 [lb in]

G lb] motor weight; numerically nearly equal to motor mass, expressed in kg, multiplied by 10.

X [in] distance from motor center of gravity from flange surface

HF [in] supplied in the table, according to gear reducer size and flange diameter P_1

Very long and thin motors, though with bending moments within the prescribed limits, may generate anomalous vibrations during the operation. In these cases it is necessary to foresee a proper additional motor support (see motor specific documentation).

Loads higher than permissible loads may be present in dynamical applications where the gearmotor is subjected to translations, rotations or oscillations (e.g.: shaft mounting arrangements): consult us for the study of every specific case.

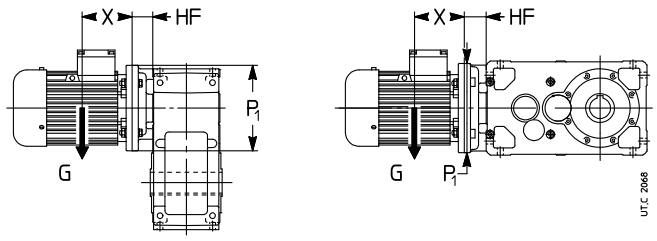

Bending moment T_{bmax} and dimension HF

Size	P_1 Ø	2I, 3I HF in	2I, 3I T_{bmax} lb in	4I HF in	4I T_{bmax} lb in	CI HF in	CI T_{bmax} lb in	ICI HF in	ICI T_{bmax} lb in	C3I HF in	C3I T_{bmax} lb in	C2I HF[1] in	C2I T_{bmax} lb in
40	140	1.10	**250**	–	**–**	1.22	**560**	1.22	**560**	–	**–**	– –	**–**
	160	–	**–**	–	**–**	1.22		1.22	**560**	–	**–**	– –	**–**
50	140	1.50	**500**	–	**–**	1.22	**560**	1.22	**560**	1.97	**560**	– –	**–**
	160	1.18	**500**	–	**–**	1.22	**560**	1.22	**560**	1.97	**560**	– –	**–**
	200	–	**–**	–	**–**	1.22	**560**	1.22	**560**	–	**–**	– –	**–**
63, 64	140	1.22	**560**	2.01	**560**	–	**–**	–	**–**	–	**–**	– –	–
	160	1.22	**560**	2.01	**560**	1.50	**1 000**	1.50	**1 000**	2.56	**1 000**	– –	**–**
	200	1.22	**1 000**	–	**–**	1.50	**1 000**	1.50	**1 000**	2.56	**1 000**	– –	**–**
80, 81	160	1.50	**1 000**	2.60	**1 000**	–	**–**	1.50	**1 000**	2.56	**1 000**	– –	**–**
	200	1.50	**1 750**	2.60	**1 000**	1.50	**1 750**	1.50	**1 000**	2.56	**1 000**	– –	**–**
	250	1.50	**1 750**	–	**–**	1.97	**1 750**	–	**–**	–	**–**	– –	**–**
100	200	1.77	**2 500**	3.11	**2 500**	1.77	**2 500**	1.77	**2 500**	3.07	**2 500**	– –	**–**
	250	1.77	**2 500**[2]	–	**–**	1.77	**4 000**	1.77	**2 500**	–	**–**	– –	**–**
	300	2.56	**4 000**	–	**–**	2.56	**4 000**	–	**–**	–	**–**	– –	**–**
125	200	2.17	**4 370**	3.94	**4 370**	–	**–**	2.17	**4 370**	3.90	**4 370**	– –	**–**
	250	2.17	**4 370**	3.94	**4 370**	–	**–**	2.17	**4 370**	3.90	**4 370**	– –	**–**
	300	2.40	**12 500**	–	**–**	2.76	**5 000**	2.20	**8 000**	–	**–**	– –	**–**
	350	2.95	**12 500**	–	**–**	3.94	**8 000**	–	**–**	–	**–**	– –	**–**
140	200	–	**–**	–	**–**	–	**–**	2.17	**4 370**	–	**–**	– –	**–**
	250	1.18	**5 000**	–	**–**	–	**–**	2.17	**4 370**	–	**–**	1.77 (1.18)	**5 000**
	300	2.17	**5 000**	–	**–**	2.76	**5 000**	2.20	**8 000**	–	**–**	2.76 (2.17)	**8 000**[3]
	350	2.95	**8 000**	–	**–**	3.94	**8 000**	–	**–**	–	**–**	– –	**–**
160, 180	250	1.97	**11 200**	–	**–**	–	**–**	2.64	**6 300**	–	**–**	2.17 –	**1 600**
	300	1.97	**11 200**	–	**–**	–	**–**	2.64	**6 300**	–	**–**	2.76 (1.97)	11 200
	350	2.95	**11 200**	–	**–**	4.02	**11 200**	3.15	**10 000**	–	**–**	3.94 (2.95)	**11 200**
	400	2.56	**11 200**	–	**–**	4.02	**11 200**	–	**–**	–	**–**	– –	**–**
	450	3.74	**17 500**	–	**–**	5.20	**11 200**	–	**–**	–	**–**	– –	**–**
200, 225	300	2.64	**22 400**	–	**–**	–	**–**	3.15	**16 000**	–	**–**	2.83 –	**5 600**
	350	2.64	**22 400**	–	**–**	3.94	**22 400**	3.15	**16 000**	–	**–**	4.02 (2.64)	**22 400**
	400	2.64	**22 400**	–	**–**	3.94	**22 400**	3.15	**16 000**	–	**–**	4.02 (2.64)	**22 400**
	450	3.82	**22 400**	–	**–**	5.12	**22 400**	3.54	**16 000**	–	**–**	5.20 (3.82)	**22 400**
	550	3.82	**35 500**	–	**–**	5.12	**35 500**	–	**–**	–	**–**	– –	**–**
250, 280	350	2.56	**40 000**	–	**–**	–	**–**	–	**–**	–	**–**	3.94 –	**12 500**
	400	2.56	**40 000**	–	**–**	–	**–**	–	**–**	–	**–**	3.94 (1.77)	**40 000**
	450	3.74	**40 000**	–	**–**	5.12	**40 000**	–	**–**	–	**–**	5.12 (2.95)	**40 000**
	550	3.74	**40 000**	–	**–**	5.12	**40 000**	–	**–**	–	**–**	5.12 (2.95)	**40 000**
	660	4.53	**42 500**	–	**–**	6.30	**42 500**	–	**–**	–	**–**	– –	**–**
320 … 360	400	3.35	**80 000**	–	**–**	–	**–**	–	**–**	–	**–**	3.94 –	**14 000**
	450	3.35	**80 000**	–	**–**	–	**–**	–	**–**	–	**–**	5.12 –	**25 000**
	550	3.74	**80 000**	–	**–**	–	**–**	–	**–**	–	**–**	5.12 (2.56)	**80 000**
	660	4.53	**80 000**	–	**–**	–	**–**	–	**–**	–	**–**	6.30 (3.35)	**80 000**

1) The values in bracket is valid for design UO2V, UO2Vsin, UO2R, UO2Rsin.
2) 4000 lb in for MR 2I.
3) 5000 lb in for design UO2V, UO2Vsin, UO2R, UO2Rsin.

7 – Helical gear reducer selection tables

$n_{N2} \cdot L_h$ rpm · h	i_N	Nominal output power P_{N2} [hp] / Nominal output torque T_{N2} [lb in] / Train of gears / ratio ... / i																	i_N	n_1 rpm	n_{N2}
		50	63	64	80	81	100	125	140	160	180	200	225	250	280	320	321	360			
90 000 000	2	–	–	–	–	–	–	10 050 I/2	–	19 300 I/1.95	–	36 150 I/2.05	–	62 300 I/2	–	108 000 I/1.95	135 000 I/1.95	–			
80 000 000	2.24	–	–	–	–	–	–	10 350 I/2.28	13 650 I/2.3	19 800 I/2.21	27 000 I/2.24	37 000 I/2.2	50 450 I/2.27	65 500 I/2.33	89 600 I/2.3	113 400 I/2.26	141 700 I/2.26	158 100 I/2.29			
	2	–	–	–	–	–	–	10 400 I/2	–	20 000 I/1.95	–	37 400 I/2.05	–	64 500 I/2	–	111 800 I/1.95	139 700 I/1.95	–			
71 000 000	2.5	–	1 560 I/2.53	–	2 940 I/2.44	–	5 750 I/2.55	10 850 I/2.53	14 250 I/2.53	20 750 I/2.44	28 750 I/2.5	38 700 I/2.55	51 500 I/2.43	67 100 I/2.53	93 550 I/2.53	116 100 I/2.44	145 100 I/2.44	164 800 I/2.5			
	2.24	–	–	–	–	–	–	10 700 I/2.28	14 100 I/2.3	20 500 I/2.21	27 950 I/2.24	38 300 I/2.2	52 200 I/2.27	67 750 I/2.33	92 700 I/2.3	117 300 I/2.26	146 600 I/2.26	163 600 I/2.29			
	2	–	–	–	–	–	–	10 750 I/2	–	20 650 I/1.95	–	38 650 I/2.05	–	66 650 I/2	–	115 500 I/1.95	144 400 I/1.95	–			
63 000 000	2.8	–	–	–	–	–	–	11 100 I/2.75	14 250 I/2.82	21 250 I/2.81	29 350 I/2.83	40 400 I/2.82	51 550 I/2.83	73 900 I/2.81	93 600 I/2.82	118 800 I/2.81	148 500 I/2.81	168 200 I/2.83			
	2.5	–	1 610 I/2.53	–	3 040 I/2.44	–	5 940 I/2.55	11 200 I/2.53	14 700 I/2.53	21 450 I/2.44	29 750 I/2.5	40 050 I/2.55	53 250 I/2.43	69 400 I/2.53	96 750 I/2.53	120 100 I/2.44	150 100 I/2.44	170 500 I/2.5			
	2.24	–	–	–	–	–	–	11 050 I/2.28	14 550 I/2.3	21 200 I/2.21	28 900 I/2.24	39 550 I/2.2	53 950 I/2.27	70 050 I/2.33	95 800 I/2.3	121 200 I/2.26	151 600 I/2.26	169 000 I/2.29			
	2	–	–	–	–	–	–	11 150 I/2	–	21 350 I/1.95	–	39 950 I/2.05	–	68 950 I/2	–	119 500 I/1.95	149 400 I/1.95	–			
56 000 000	3.15	–	1 670 I/3.28	–	3 140 I/3.13	–	6 130 I/3.27	11 600 I/3.28	14 850 I/3.13	22 200 I/3.13	29 950 I/3.25	41 300 I/3.27	54 600 I/3.18	71 850 I/3.28	104 700 I/3.19	124 100 I/3.13	155 100 I/3.13	171 600 I/3.25			
	2.8	–	–	–	–	–	–	11 500 I/2.75	14 750 I/2.82	22 000 I/2.81	30 350 I/2.83	41 800 I/2.82	53 350 I/2.83	76 450 I/2.81	96 850 I/2.82	122 900 I/2.81	153 600 I/2.81	174 000 I/2.83			
	2.5	–	1 660 I/2.53	–	3 140 I/2.44	–	6 140 I/2.55	11 600 I/2.53	15 200 I/2.53	22 200 I/2.44	30 750 I/2.5	41 400 I/2.55	55 050 I/2.43	71 700 I/2.53	100 000 I/2.53	124 100 I/2.44	155 100 I/2.44	176 200 I/2.5			
	2.24	–	–	–	–	–	–	11 450 I/2.28	15 100 I/2.3	21 900 I/2.21	29 900 I/2.24	40 950 I/2.2	55 800 I/2.27	72 450 I/2.33	99 100 I/2.3	125 400 I/2.26	156 800 I/2.26	174 900 I/2.29			
	2	–	–	–	–	–	–	11 500 I/2	–	22 050 I/1.95	–	41 250 I/2.05	–	71 150 I/2	–	123 300 I/1.95	154 200 I/1.95	–			
50 000 000	3.55	–	–	–	–	–	–	11 850 I/3.62	15 150 I/3.64	21 400 I/3.62	31 100 I/3.6	42 150 I/3.57	55 650 I/3.67	77 250 I/3.62	99 550 I/3.64	129 400 I/3.5	161 800 I/3.5	178 300 I/3.6			
	3.15	–	1 720 I/3.28	–	3 250 I/3.13	–	6 340 I/3.27	12 000 I/3.28	15 350 I/3.13	22 950 I/3.13	30 950 I/3.25	42 700 I/3.27	56 500 I/3.18	74 300 I/3.28	108 300 I/3.19	128 400 I/3.13	160 500 I/3.13	177 500 I/3.25			
	2.8	–	–	–	–	–	–	11 850 I/2.75	15 250 I/2.82	22 700 I/2.81	31 350 I/2.83	43 200 I/2.82	55 150 I/2.83	79 000 I/2.81	100 100 I/2.82	127 000 I/2.81	158 800 I/2.81	179 800 I/2.83			

For n_1 lower than 560 rpm see page 107.

$n_{N2} \cdot L_h$ rpm · h	i_N	Nominal output power P_{N2} [hp] / Nominal output torque T_{N2} [lb in] / Train of gears / ratio ... / i																	i_N	n_1 rpm	n_{N2}
		50	63	64	80	81	100	125	140	160	180	200	225	250	280	320	321	360			
50 000 000	2.5	–	1 720 I/2.53	–	3 250 I/2.44	–	6 360 I/2.55	12 000 I/2.53	15 750 I/2.53	22 950 I/2.44	31 800 I/2.5	42 800 I/2.55	56 950 I/2.43	74 200 I/2.53	103 500 I/2.53	128 400 I/2.44	160 500 I/2.44	182 300 I/2.5			
	2.24	–	–	–	–	–	–	11 800 I/2.28	15 550 I/2.3	22 600 I/2.21	30 850 I/2.24	42 250 I/2.2	57 600 I/2.27	74 800 I/2.33	102 300 I/2.3	129 500 I/2.26	161 800 I/2.26	180 500 I/2.29			
	2	–	–	–	–	–	–	11 900 I/2	–	22 850 I/1.95	–	42 750 I/2.05	–	73 700 I/2	–	127 800 I/1.95	159 700 I/1.95	–			
45 000 000	4	–	1 620 I/4	–	3 340 I/4.16	–	4 970 I/3.92	10 100 I/4	15 750 I/4.08	23 750 I/4.13	30 000 I/4.15	44 200 I/4.13	57 700 I/4.07	74 750 I/4	108 900 I/4.08	139 100 I/4.07	173 800 I/4.07	184 900 I/4			
	3.55	–	–	–	–	–	–	12 300 I/3.62	15 700 I/3.64	22 150 I/3.62	32 150 I/3.6	43 600 I/3.57	57 600 I/3.67	79 900 I/3.62	103 000 I/3.64	133 900 I/3.5	167 400 I/3.5	184 400 I/3.6			
	3.15	–	1 780 I/3.28	–	3 360 I/3.13	–	6 550 I/3.27	12 400 I/3.28	15 850 I/3.13	23 750 I/3.13	32 000 I/3.25	44 150 I/3.27	58 400 I/3.18	76 800 I/3.28	111 900 I/3.19	132 700 I/3.13	165 900 I/3.13	183 500 I/3.25			
	2.8	–	–	–	–	–	–	12 300 I/2.75	15 750 I/2.82	23 500 I/2.81	32 450 I/2.83	44 700 I/2.82	57 050 I/2.83	81 750 I/2.81	103 500 I/2.82	131 400 I/2.81	164 300 I/2.81	186 000 I/2.83			
	2.5	–	1 780 I/2.53	–	3 350 I/2.44	–	6 560 I/2.55	12 400 I/2.53	16 250 I/2.53	23 700 I/2.44	32 800 I/2.5	44 200 I/2.55	58 800 I/2.43	76 600 I/2.53	106 800 I/2.53	132 500 I/2.44	165 700 I/2.44	188 100 I/2.5			
	2.24	–	–	–	–	–	–	12 200 I/2.28	16 100 I/2.3	23 450 I/2.21	31 950 I/2.24	43 750 I/2.2	59 700 I/2.27	77 450 I/2.33	106 000 I/2.3	134 100 I/2.26	167 700 I/2.26	187 000 I/2.29			
	2	–	–	–	–	–	–	12 350 I/2	–	23 700 I/1.95	–	44 300 I/2.05	–	76 400 I/2	–	132 400 I/1.95	165 500 I/1.95	–			
40 000 000	4.5	–	–	–	–	–	–	10 300 I/4.45	15 500 I/4.5	24 150 I/4.5	31 450 I/4.67	44 900 I/4.5	57 550 I/4.67	82 550 I/4.47	100 700 I/4.5	143 200 I/4.5	179 000 I/4.5	196 600 I/4.6			
	4	–	1 670 I/4	–	3 450 I/4.16	–	5 140 I/3.92	10 450 I/4	16 300 I/4.08	24 600 I/4.13	31 000 I/4.15	45 750 I/4.13	59 700 I/4.07	77 350 I/4	112 600 I/4.08	143 900 I/4.07	179 800 I/4.07	191 300 I/4			
	3.55	–	–	–	–	–	–	12 700 I/3.62	16 200 I/3.64	22 900 I/3.62	33 250 I/3.6	45 050 I/3.57	59 500 I/3.67	82 550 I/3.62	106 400 I/3.64	138 400 I/3.5	173 000 I/3.5	190 600 I/3.6			
	3.15	–	1 840 I/3.28	–	3 470 I/3.13	–	6 780 I/3.27	12 850 I/3.28	16 400 I/3.13	24 550 I/3.13	33 100 I/3.25	45 650 I/3.27	60 400 I/3.18	79 450 I/3.28	115 800 I/3.19	137 300 I/3.13	171 600 I/3.13	189 800 I/3.25			
	2.8	–	–	–	–	–	–	12 650 I/2.75	16 250 I/2.82	24 250 I/2.81	33 500 I/2.83	46 150 I/2.82	58 850 I/2.83	84 350 I/2.81	106 900 I/2.82	135 600 I/2.81	169 600 I/2.81	192 000 I/2.83			
	2.5	–	1 840 I/2.53	–	3 470 I/2.44	–	6 800 I/2.55	12 800 I/2.53	16 850 I/2.53	24 550 I/2.44	34 000 I/2.5	45 800 I/2.55	60 900 I/2.43	79 350 I/2.53	110 600 I/2.53	137 300 I/2.44	171 600 I/2.44	194 900 I/2.5			
	2.24	–	–	–	–	–	–	12 650 I/2.28	16 700 I/2.3	24 300 I/2.21	33 100 I/2.24	45 350 I/2.2	61 850 I/2.27	80 300 I/2.33	109 800 I/2.3	139 000 I/2.26	173 800 I/2.26	193 800 I/2.29			
	2	–	–	–	–	–	–	12 800 I/2	–	24 550 I/1.95	–	45 900 I/2.05	–	79 200 I/2	–	137 300 I/1.95	171 600 I/1.95	–			

For n_1 lower than 560 rpm see page 107.

$n_{N2} \cdot L_h$ rpm · h	i_N	Nominal output power P_{N2} [hp] / Nominal output torque T_{N2} [lb in] / Train of gears / ratio ... / i																	i_N	n_1 rpm	n_{N2}
		50	63	64	80	81	100	125	140	160	180	200	225	250	280	320	321	360			
35 500 000	5	–	1 680 I/5	–	3 470 I/5.2	–	5 160 I/4.82	10 500 I/5	15 800 I/5	24 550 I/4.92	30 450 I/5.07	45 650 I/4.92	58 400 I/5.07	73 850 I/5.08	115 500 I/5	145 900 I/4.92	182 400 I/4.92	201 700 I/5.07			
	4.5	–	–	–	–	–	–	10 650 I/4.45	16 050 I/4.5	25 000 I/4.5	32 500 I/4.67	46 500 I/4.5	59 550 I/4.67	85 400 I/4.47	104 100 I/4.5	148 100 I/4.5	185 200 I/4.5	203 400 I/4.6			
	4	–	1 730 I/4	–	3 570 I/4.16	–	5 310 I/3.92	10 800 I/4	16 850 I/4.08	25 400 I/4.13	32 050 I/4.15	47 250 I/4.13	61 700 I/4.07	79 950 I/4	116 400 I/4.08	148 700 I/4.07	185 900 I/4.07	197 700 I/4			
	3.55	–	–	–	–	–	–	13 150 I/3.62	16 750 I/3.64	23 700 I/3.62	34 400 I/3.6	46 600 I/3.57	61 600 I/3.67	85 450 I/3.62	110 100 I/3.64	143 200 I/3.5	179 000 I/3.5	197 200 I/3.6			
	3.15	–	1 900 I/3.28	–	3 580 I/3.13	–	7 000 I/3.27	13 250 I/3.28	16 950 I/3.13	25 350 I/3.13	34 200 I/3.25	47 150 I/3.27	62 350 I/3.18	82 000 I/3.28	119 500 I/3.19	141 700 I/3.13	177 100 I/3.13	195 900 I/3.25			
	2.8	–	–	–	–	–	–	13 150 I/2.75	16 850 I/2.82	25 150 I/2.81	34 700 I/2.83	47 800 I/2.82	61 000 I/2.83	87 400 I/2.81	110 700 I/2.82	140 500 I/2.81	175 700 I/2.81	198 900 I/2.83			
	2.5	–	1 910 I/2.53	–	3 600 I/2.44	–	7 040 I/2.55	13 300 I/2.53	17 450 I/2.53	25 450 I/2.44	35 250 I/2.5	47 450 I/2.55	63 100 I/2.43	82 250 I/2.53	114 700 I/2.53	142 300 I/2.44	177 900 I/2.44	202 000 I/2.5			
	2.24	–	–	–	–	–	–	13 150 I/2.28	17 300 I/2.3	25 150 I/2.21	34 300 I/2.24	47 000 I/2.2	64 100 I/2.27	83 200 I/2.33	113 800 I/2.3	144 100 I/2.26	180 100 I/2.26	200 900 I/2.29			
	2	–	–	–	–	–	–	13 250 I/2	–	25 450 I/1.95	–	47 550 I/2.05	–	82 050 I/2	–	142 200 I/1.95	177 800 I/1.95	–			
31 500 000	5	–	1 740 I/5	–	3 590 I/5.2	–	5 340 I/4.82	10 900 I/5	16 350 I/5	25 400 I/4.92	31 500 I/5.07	47 250 I/4.92	60 400 I/5.07	76 400 I/5.08	119 500 I/5	151 000 I/4.92	188 700 I/4.92	208 700 I/5.07			
	4.5	–	–	–	–	–	–	11 000 I/4.45	16 600 I/4.5	25 850 I/4.5	33 600 I/4.67	48 050 I/4.5	61 550 I/4.67	88 250 I/4.47	107 600 I/4.5	153 100 I/4.5	191 400 I/4.5	210 200 I/4.6			
	4	–	1 790 I/4	–	3 690 I/4.16	–	5 490 I/3.92	11 150 I/4	17 450 I/4.08	26 300 I/4.13	33 150 I/4.15	48 900 I/4.13	63 850 I/4.07	82 700 I/4	120 400 I/4.08	153 800 I/4.07	192 300 I/4.07	204 500 I/4			
	3.55	–	–	–	–	–	–	13 550 I/3.62	17 300 I/3.64	24 450 I/3.62	35 500 I/3.6	48 100 I/3.57	63 550 I/3.67	88 150 I/3.62	113 700 I/3.64	147 800 I/3.5	184 700 I/3.5	203 500 I/3.6			
	3.15	–	1 970 I/3.28	–	3 710 I/3.13	–	7 250 I/3.27	13 750 I/3.28	17 550 I/3.13	26 250 I/3.13	35 400 I/3.25	48 850 I/3.27	64 600 I/3.18	84 950 I/3.28	123 800 I/3.19	146 800 I/3.13	183 500 I/3.13	203 000 I/3.25			
	2.8	–	–	–	–	–	–	13 600 I/2.75	17 450 I/2.82	26 050 I/2.81	35 950 I/2.83	49 550 I/2.82	63 200 I/2.83	90 600 I/2.81	114 700 I/2.82	145 600 I/2.81	182 100 I/2.81	206 200 I/2.83			
	2.5	–	1 980 I/2.53	–	3 730 I/2.44	–	7 300 I/2.55	13 750 I/2.53	18 100 I/2.53	26 350 I/2.44	36 500 I/2.5	49 200 I/2.55	65 450 I/2.43	85 250 I/2.53	118 800 I/2.53	147 500 I/2.44	184 400 I/2.44	209 300 I/2.5			
	2.24	–	–	–	–	–	–	13 600 I/2.28	17 950 I/2.3	26 050 I/2.21	35 550 I/2.24	48 700 I/2.2	66 400 I/2.27	86 200 I/2.33	117 900 I/2.3	149 300 I/2.26	186 600 I/2.26	208 100 I/2.29			
	2	–	–	–	–	–	–	13 700 I/2	–	26 300 I/1.95	–	49 200 I/2.05	–	84 900 I/2	–	147 100 I/1.95	183 900 I/1.95	–			

For n_1 lower than 560 rpm see page 107.

$n_{N2} \cdot L_h$ rpm · h	i_N	Nominal output power P_{N2} [hp] / Nominal output torque T_{N2} [lb in] / Train of gears / ratio ... / i																	i_N	n_1 rpm	n_{N2}
		50	63	64	80	81	100	125	140	160	180	200	225	250	280	320	321	360			
28 000 000	6.3	875 2I/6.42	1 650 2I/6.53	1 970 2I/6.86	3 460 2I/6.41	3 940 2I/6.41	7 190 2I/6.42	14 400 2I/6.53	–	28 850 2I/6.41	–	66 100 2I/6.42	–	132 500 2I/6.53	–	224 700 2I/6.41	265 300 2I/6.41	–			
	5	–	1 800 I/5	–	3 710 I/5.2	–	5 520 I/4.82	11 250 I/5	16 900 I/5	26 250 I/4.92	32 550 I/5.07	48 800 I/4.92	62 450 I/5.07	78 950 I/5.08	123 500 I/5	156 000 I/4.92	195 100 I/4.92	215 700 I/5.07			
	4.5	–	–	–	–	–	–	11 400 I/4.45	17 150 I/4.5	26 700 I/4.5	34 750 I/4.67	49 700 I/4.5	63 700 I/4.67	91 300 I/4.47	111 400 I/4.5	158 400 I/4.5	198 000 I/4.5	217 500 I/4.6			
	4	–	1 850 I/4	–	3 810 I/4.16	–	5 670 I/3.92	11 500 I/4	18 000 I/4.08	27 150 I/4.13	34 250 I/4.15	50 450 I/4.13	65 900 I/4.07	85 350 I/4	124 300 I/4.08	158 800 I/4.07	198 500 I/4.07	211 100 I/4			
	3.55	–	–	–	–	–	–	14 050 I/3.62	17 900 I/3.64	25 300 I/3.62	36 800 I/3.6	49 850 I/3.57	65 850 I/3.67	91 350 I/3.62	117 700 I/3.64	153 100 I/3.5	191 400 I/3.5	210 800 I/3.6			
	3.15	–	2 040 I/3.28	–	3 850 I/3.13	–	7 510 I/3.27	14 250 I/3.28	18 200 I/3.13	27 200 I/3.13	36 700 I/3.25	50 600 I/3.27	66 950 I/3.18	88 050 I/3.28	128 300 I/3.19	152 200 I/3.13	190 200 I/3.13	210 400 I/3.25			
	2.8	–	–	–	–	–	–	14 100 I/2.75	18 100 I/2.82	27 000 I/2.81	37 300 I/2.83	51 350 I/2.82	65 500 I/2.83	93 900 I/2.81	118 900 I/2.82	151 000 I/2.81	188 700 I/2.81	213 700 I/2.83			
	2.5	–	2 050 I/2.53	–	3 860 I/2.44	–	7 560 I/2.55	14 250 I/2.53	18 750 I/2.53	27 300 I/2.44	37 850 I/2.5	50 950 I/2.55	67 800 I/2.43	88 300 I/2.53	123 100 I/2.53	152 800 I/2.44	191 000 I/2.44	216 900 I/2.5			
	2.24	–	–	–	–	–	–	14 050 I/2.28	18 550 I/2.3	26 950 I/2.21	36 800 I/2.24	50 400 I/2.2	68 700 I/2.27	89 200 I/2.33	122 000 I/2.3	154 400 I/2.26	193 000 I/2.26	215 300 I/2.29			
	2	–	–	–	–	–	–	14 150 I/2	–	27 150 I/1.95	–	50 800 I/2.05	–	87 600 I/2	–	151 800 I/1.95	189 800 I/1.95	–			
25 000 000	6.3	900 2I/6.42	1 690 2I/6.53	2 020 2I/6.86	3 550 2I/6.41	4 040 2I/6.41	7 380 2I/6.42	14 800 2I/6.53	–	29 600 2I/6.41	–	67 850 2I/6.42	–	136 000 2I/6.53	–	230 600 2I/6.41	272 300 2I/6.41	–			
	5	–	1 860 I/5	–	3 840 I/5.2	–	5 710 I/4.82	11 650 I/5	17 500 I/5	27 150 I/4.92	33 700 I/5.07	50 500 I/4.92	64 600 I/5.07	81 700 I/5.08	127 800 I/5	161 400 I/4.92	201 800 I/4.92	223 100 I/5.07			
	4.5	–	–	–	–	–	–	11 750 I/4.45	17 700 I/4.5	27 600 I/4.5	35 900 I/4.67	51 300 I/4.5	65 700 I/4.67	94 250 I/4.47	114 900 I/4.5	163 500 I/4.5	204 300 I/4.5	224 500 I/4.6			
	4	–	1 910 I/4	–	3 940 I/4.16	–	5 880 I/3.92	11 950 I/4	18 650 I/4.08	28 100 I/4.13	35 450 I/4.15	52 300 I/4.13	68 250 I/4.07	88 450 I/4	128 800 I/4.08	164 500 I/4.07	205 600 I/4.07	218 700 I/4			
	3.55	–	–	–	–	–	–	14 550 I/3.62	18 550 I/3.64	26 250 I/3.62	38 100 I/3.6	51 650 I/3.57	68 250 I/3.67	94 650 I/3.62	122 000 I/3.64	158 700 I/3.5	198 300 I/3.5	218 500 I/3.6			
	3.15	–	2 120 I/3.28	–	3 990 I/3.13	–	7 790 I/3.27	14 750 I/3.28	18 850 I/3.13	28 200 I/3.13	38 050 I/3.25	52 450 I/3.27	69 400 I/3.18	91 250 I/3.28	133 000 I/3.19	157 700 I/3.13	197 100 I/3.13	218 100 I/3.25			
	2.8	–	–	–	–	–	–	14 600 I/2.75	18 750 I/2.82	27 950 I/2.81	38 600 I/2.83	53 200 I/2.82	67 850 I/2.83	97 250 I/2.81	123 200 I/2.82	156 400 I/2.81	195 500 I/2.81	221 400 I/2.83			
	2.5	–	2 120 I/2.53	–	4 000 I/2.44	–	7 830 I/2.55	14 750 I/2.53	19 400 I/2.53	28 250 I/2.44	39 150 I/2.5	52 700 I/2.55	70 100 I/2.43	91 350 I/2.53	127 400 I/2.53	158 100 I/2.44	197 600 I/2.44	224 400 I/2.5			

For n_1 lower than 560 rpm see page 107.

$n_{N2} \cdot L_h$ rpm · h	i_N	Nominal output power P_{N2} [hp] / Nominal output torque T_{N2} [lb in] / Train of gears / ratio ... / i																	i_N	n_1 rpm	n_{N2} rpm
		50	63	64	80	81	100	125	140	160	180	200	225	250	280	320	321	360			
25 000 000	2.24	–	–	–	–	–	–	14 500 I/2.28	19 150 I/2.3	27 850 I/2.21	37 950 I/2.24	52 000 I/2.2	70 900 I/2.27	92 050 I/2.33	125 900 I/2.3	159 400 I/2.26	199 200 I/2.26	222 200 I/2.29			
	2	–	–	–	–	–	–	14 650 I/2	–	28 150 I/1.95	–	52 600 I/2.05	–	90 750 I/2	–	157 300 I/1.95	196 600 I/1.95	–			
22 400 000	8	1000 2I/8.01	1 860 2I/8.26	2 310 2I/7.99	3 940 2I/8.03	4 700 2I/8.03	8 040 2I/8.01	16 100 2I/8.26	–	36 100 2I/8.03	–	73 700 2I/8.01	–	148 000 2I/8.26	–	258 600 2I/8.03	322 400 2I/8.03	–			
	6.3	925 2I/6.42	1 740 2I/6.53	2 080 2I/6.86	3 650 2I/6.41	4 150 2I/6.41	7 580 2I/6.42	15 200 2I/6.53	–	30 400 2I/6.41	–	69 750 2I/6.42	–	139 800 2I/6.53	–	236 900 2I/6.41	279 800 2I/6.41	–			
	5	–	1 920 I/5	–	3 960 I/5.2	–	5 900 I/4.82	12 000 I/5	18 050 I/5	28 000 I/4.92	34 750 I/5.07	52 100 I/4.92	66 650 I/5.07	84 350 I/5.08	131 900 I/5	166 600 I/4.92	208 300 I/4.92	230 300 I/5.07			
	4.5	–	–	–	–	–	–	12 200 I/4.45	18 350 I/4.5	28 550 I/4.5	37 150 I/4.67	53 150 I/4.5	68 100 I/4.67	97 650 I/4.47	119 100 I/4.5	169 400 I/4.5	211 700 I/4.5	232 600 I/4.6			
	4	–	1 980 I/4	–	4 090 I/4.16	–	6 090 I/3.92	12 350 I/4	19 300 I/4.08	29 150 I/4.13	36 750 I/4.15	54 200 I/4.13	70 750 I/4.07	91 650 I/4	133 400 I/4.08	170 500 I/4.07	213 100 I/4.07	226 700 I/4			
	3.55	–	–	–	–	–	–	15 100 I/3.62	19 250 I/3.64	27 200 I/3.62	39 500 I/3.6	53 550 I/3.57	70 750 I/3.67	98 150 I/3.62	126 500 I/3.64	164 500 I/3.5	205 600 I/3.5	226 500 I/3.6			
	3.15	–	2 190 I/3.28	–	4 130 I/3.13	–	8 070 I/3.27	15 300 I/3.28	19 550 I/3.13	29 200 I/3.13	39 400 I/3.25	54 350 I/3.27	71 900 I/3.18	94 550 I/3.28	137 800 I/3.19	163 400 I/3.13	204 200 I/3.13	225 900 I/3.25			
	2.8	–	–	–	–	–	–	15 100 I/2.75	19 400 I/2.82	28 950 I/2.81	39 950 I/2.83	55 050 I/2.82	70 200 I/2.83	100 600 I/2.81	127 500 I/2.82	161 800 I/2.81	202 300 I/2.81	229 100 I/2.83			
	2.5	–	2 190 I/2.53	–	4 130 I/2.44	–	8 080 I/2.55	15 250 I/2.53	20 000 I/2.53	29 200 I/2.44	40 400 I/2.5	54 400 I/2.55	72 400 I/2.43	94 300 I/2.53	131 500 I/2.53	163 200 I/2.44	204 000 I/2.44	231 600 I/2.5			
	2.24	–	–	–	–	–	–	15 050 I/2.28	19 850 I/2.3	28 850 I/2.21	39 350 I/2.24	53 850 I/2.2	73 450 I/2.27	95 350 I/2.33	130 500 I/2.3	165 100 I/2.26	206 400 I/2.26	230 200 I/2.29			
	2	–	–	–	–	–	–	15 200 I/2	–	29 150 I/1.95	–	54 550 I/2.05	–	94 050 I/2	–	163 000 I/1.95	203 800 I/1.95	–			
20 000 000	9	–	–	–	–	–	–	–	20 850 2I/9.22	36 200 2I/9.24	41 850 2I/9.31	73 700 2I/8.85	93 750 2I/8.88	148 000 2I/9.19	191 800 2I/9.22	258 600 2I/9.24	322 400 2I/9.24	385 000 2I/9.31			
	8	1 020 2I/8.01	1 910 2I/8.26	2 370 2I/7.99	4 040 2I/8.03	4 820 2I/8.03	8 250 2I/8.01	16 550 2I/8.26	–	37 050 2I/8.03	–	75 650 2I/8.01	–	152 000 2I/8.26	–	265 500 2I/8.03	330 900 2I/8.03	–			
	6.3	950 2I/6.42	1 780 2I/6.53	2 130 2I/6.86	3 740 2I/6.41	4 260 2I/6.41	7 770 2I/6.42	15 600 2I/6.53	–	31 200 2I/6.41	–	71 500 2I/6.42	–	143 300 2I/6.53	–	243 000 2I/6.41	286 900 2I/6.41	–			
	5	–	1950 I/5	–	4 100 I/5.2	–	6 110 I/4.82	12 450 I/5	18 700 I/5	29 050 I/4.92	36 000 I/5.07	54 000 I/4.92	69 050 I/5.07	87 350 I/5.08	136 600 I/5	172 600 I/4.92	215 800 I/4.92	238 600 I/5.07			
	4.5	–	–	–	–	–	–	12 650 I/4.45	19 050 I/4.5	29 600 I/4.5	38 550 I/4.67	55 050 I/4.5	70 550 I/4.67	101 200 I/4.47	123 400 I/4.5	175 500 I/4.5	219 400 I/4.5	241 000 I/4.6			

For n_1 lower than 560 rpm see page 107.

$n_{N2} \cdot L_h$ rpm · h	i_N	50	63	64	80	81	100	125	140	160	180	200	225	250	280	320	321	360	i_N	n_1 rpm	n_{N2}
		Nominal output power P_{N2} [hp] Nominal output torque T_{N2} [lb in] Train of gears / ratio ... / i																			
20 000 000	4	–	2 050 I/4	–	4 240 I/4.16	–	6 310 I/3.92	12 800 I/4	20 000 I/4.08	30 200 I/4.13	38 100 I/4.15	56 150 I/4.13	73 350 I/4.07	95 000 I/4	138 300 I/4.08	176 700 I/4.07	220 900 I/4.07	235 000 I/4			
	3.55	–	–	–	–	–	–	15 600 I/3.62	19 950 I/3.64	28 200 I/3.62	40 950 I/3.6	55 450 I/3.57	73 300 I/3.67	101 700 I/3.62	131 000 I/3.64	170 400 I/3.5	213 000 I/3.5	234 600 I/3.6			
	3.15	–	2 270 I/3.28	–	4 270 I/3.13	–	8 340 I/3.27	15 800 I/3.28	20 200 I/3.13	30 250 I/3.13	40 750 I/3.25	56 250 I/3.27	74 400 I/3.18	97 800 I/3.28	142 600 I/3.19	169 000 I/3.13	211 300 I/3.13	233 700 I/3.25			
	2.8	–	–	–	–	–	–	15 600 I/2.75	20 000 I/2.82	29 850 I/2.81	41 250 I/2.83	56 800 I/2.82	72 500 I/2.83	103 900 I/2.81	131 600 I/2.82	167 000 I/2.81	208 700 I/2.81	236 400 I/2.83			
	2.5	–	2 270 I/2.53	–	4 270 I/2.44	–	8 370 I/2.55	15 800 I/2.53	20 700 I/2.53	30 200 I/2.44	41 850 I/2.5	56 350 I/2.55	75 000 I/2.43	97 700 I/2.53	136 200 I/2.53	169 000 I/2.44	211 300 I/2.44	239 900 I/2.5			
	2.24	–	–	–	–	–	–	15 600 I/2.28	20 550 I/2.3	29 900 I/2.21	40 750 I/2.24	55 850 I/2.2	76 150 I/2.27	98 850 I/2.33	135 200 I/2.3	171 100 I/2.26	213 900 I/2.26	238 600 I/2.29			
	2	–	–	–	–	–	–	15 750 I/2	–	30 200 I/1.95	–	56 550 I/2.05	–	97 500 I/2	–	169 000 I/1.95	211 200 I/1.95	–			
18 000 000	10	1000 2I/10.2	1 860 2I/10.7	2 350 2I/11.2	4 130 2I/10.3	4 850 2I/10.3	8 040 2I/10.2	16 100 2I/10.7	23 100 2I/10.2	36 200 2I/10.3	48 000 2I/10.7	73 700 2I/10.2	103 200 2I/9.95	148 000 2I/10.7	203 800 2I/10.4	258 600 2I/10.3	322 400 2I/10.3	407 700 2I/10.7			
	9	–	–	–	–	–	–	–	21 400 2I/9.22	37 150 2I/9.24	42 950 2I/9.31	75 650 2I/8.85	96 200 2I/8.88	152 000 2I/9.19	196 900 2I/9.22	265 500 2I/9.24	330 900 2I/9.24	395 200 2I/9.31			
	8	1 050 2I/8.01	1 960 2I/8.26	2 440 2I/7.99	4 150 2I/8.03	4 950 2I/8.03	8 480 2I/8.01	17 000 2I/8.26	–	38 050 2I/8.03	–	77 700 2I/8.01	–	156 100 2I/8.26	–	272 700 2I/8.03	340 000 2I/8.03	–			
	6.3	975 2I/6.42	1 830 2I/6.53	2 190 2I/6.86	3 850 2I/6.41	4 380 2I/6.41	8 000 2I/6.42	16 050 2I/6.53	–	32 050 2I/6.41	–	73 550 2I/6.42	–	147 400 2I/6.53	–	249 900 2I/6.41	295 100 2I/6.41	–			
	5	–	2000 I/5	–	4 250 I/5.2	–	6 330 I/4.82	12 900 I/5	19 400 I/5	30 100 I/4.92	37 300 I/5.07	55 950 I/4.92	71 600 I/5.07	90 550 I/5.08	141 600 I/5	178 900 I/4.92	223 600 I/4.92	247 300 I/5.07			
	4.5	–	–	–	–	–	–	13 100 I/4.45	19 750 I/4.5	30 700 I/4.5	39 950 I/4.67	57 100 I/4.5	73 150 I/4.67	104 900 I/4.47	127 900 I/4.5	181 900 I/4.5	227 400 I/4.5	249 800 I/4.6			
	4	–	2 130 I/4	–	4 390 I/4.16	–	6 540 I/3.92	13 300 I/4	20 750 I/4.08	31 300 I/4.13	39 450 I/4.15	58 200 I/4.13	75 950 I/4.07	98 400 I/4	143 300 I/4.08	183 100 I/4.07	228 800 I/4.07	243 400 I/4			
	3.55	–	–	–	–	–	–	16 150 I/3.62	20 650 I/3.64	29 150 I/3.62	42 350 I/3.6	57 400 I/3.57	75 800 I/3.67	105 200 I/3.62	135 600 I/3.64	176 300 I/3.5	220 400 I/3.5	242 800 I/3.6			
	3.15	–	2 340 I/3.28	–	4 410 I/3.13	–	8 610 I/3.27	16 300 I/3.28	20 850 I/3.13	31 200 I/3.13	42 100 I/3.25	58 050 I/3.27	76 750 I/3.18	101 000 I/3.28	147 100 I/3.19	174 500 I/3.13	218 100 I/3.13	241 200 I/3.25			
	2.8	–	–	–	–	–	–	16 150 I/2.75	20 750 I/2.82	30 950 I/2.81	42 700 I/2.83	58 850 I/2.82	75 100 I/2.83	107 600 I/2.81	136 300 I/2.82	173 000 I/2.81	216 300 I/2.81	244 900 I/2.83			
	2.5	–	2 350 I/2.53	–	4 430 I/2.44	–	8 670 I/2.55	16 350 I/2.53	21 500 I/2.53	31 350 I/2.44	43 400 I/2.5	58 450 I/2.55	77 700 I/2.43	101 200 I/2.53	141 200 I/2.53	175 200 I/2.44	219 000 I/2.44	248 700 I/2.5			

For n_1 lower than 560 rpm see page 107.

$n_{N2} \cdot L_h$ rpm · h	i_N	50	63	64	80	81	100	125	140	160	180	200	225	250	280	320	321	360	i_N	n_1 rpm	n_{N2}
		Nominal output power P_{N2} [hp] Nominal output torque T_{N2} [lb in] Train of gears / ratio ... / i																			
18 000 000	2.24	–	–	–	–	–	–	16 150 I/2.28	21 300 I/2.3	31 000 I/2.21	42 250 I/2.24	57 900 I/2.2	78 950 I/2.27	102 500 I/2.33	140 200 I/2.3	177 400 I/2.26	221 700 I/2.26	247 300 I/2.29			
								362		–		–		–		–	–		2	2800	**1400**
	2	–	–	–	–	–	–	16 300 I/2▲	–	31 300 I/1.95	–	58 550 I/2.05	–	101 000 I/2	–	175 100 I/1.95	218 800 I/1.95	–			
16 000 000	11.2	–	–	–	–	–	–	–	24 350 2I/11.9	36 200 2I/11.9	51 700 2I/11.8	73 700 2I/11.2	103 200 2I/11.5	148 000 2I/11.8	203 800 2I/11.9	258 600 2I/11.5	322 400 2I/11.5	407 700 2I/11.8			
	10	1 020 2I/10.2	1 910 2I/10.7	2 410 2I/11.2	4 270 2I/10.3	5 020 2I/10.3	8 250 2I/10.2	16 550 2I/10.7	23 700 2I/10.2	37 150 2I/10.3	49 250 2I/10.7	75 650 2I/10.2	105 900 2I/9.95	152 000 2I/10.7	209 200 2I/10.4	265 500 2I/10.3	330 900 2I/10.3	418 600 2I/10.7			
	9	–	–	–	–	–	–	–	22 000 2I/9.22	38 200 2I/9.24	44 150 2I/9.31	77 700 2I/8.85	98 850 2I/8.88	156 100 2I/9.19	202 300 2I/9.22	272 700 2I/9.24	340 000 2I/9.24	406 000 2I/9.31			
	8	1 080 2I/8.01	2 010 2I/8.26	2 500 2I/7.99	4 260 2I/8.03	5 080 2I/8.03	8 690 2I/8.01	17 450 2I/8.26	–	39 050 2I/8.03	–	79 700 2I/8.01	–	160 100 2I/8.26	–	279 700 2I/8.03	348 700 2I/8.03	–			
	6.3	1 010 2I/6.42	1 890 2I/6.53	2 260 2I/6.86	3 970 2I/6.41	4 520 2I/6.41	8 250 2I/6.42	16 550 2I/6.53	–	33 100 2I/6.41	–	75 900 2I/6.42	–	152 200 2I/6.53	–	258 000 2I/6.41	304 600 2I/6.41	–			
	5	–	2060 I/5	–	4 410 I/5.2	–	6 560 I/4.82	13 350 I/5	20 100 I/5	31 200 I/4.92	38 700 I/5.07	58 000 I/4.92	74 200 I/5.07	93 850 I/5.08	146 800 I/5	185 400 I/4.92	231 800 I/4.92	256 300 I/5.07			
	4.5	–	–	–	–	–	–	13 550 I/4.45	20 450 I/4.5	31 800 I/4.5	41 350 I/4.67	59 150 I/4.5	75 750 I/4.67	108 700 I/4.47	132 500 I/4.5	188 500 I/4.5	235 600 I/4.5	258 800 I/4.6			
	4	–	2 200 I/4	–	4 540 I/4.16	–	6 770 I/3.92	13 750 I/4	21 450 I/4.08	32 350 I/4.13	40 850 I/4.15	60 200 I/4.13	78 600 I/4.07	101 800 I/4	148 300 I/4.08	189 400 I/4.07	236 700 I/4.07	251 800 I/4			
	3.55	–	–	–	–	–	–	16 700 I/3.62	21 300 I/3.64	30 100 I/3.62	43 700 I/3.6	59 250 I/3.57	78 250 I/3.67	108 600 I/3.62	139 900 I/3.64	181 900 I/3.5	227 400 I/3.5	250 600 I/3.6			
	3.15	–	2 430 I/3.28	–	4 570 I/3.13	–	8 920 I/3.27	16 900 I/3.28	21 600 I/3.13	32 300 I/3.13	43 600 I/3.25	60 100 I/3.27	79 550 I/3.18	104 600 I/3.28	152 400 I/3.19	180 700 I/3.13	225 900 I/3.13	249 900 I/3.25			
	2.8	–	–	–	–	–	–	16 750 I/2.75	21 500 I/2.82	32 050 I/2.81	44 300 I/2.83	61 000 I/2.82	77 800 I/2.83	111 500 I/2.81	141 300 I/2.82	179 300 I/2.81	224 100 I/2.81	253 800 I/2.83			
	2.5	–	2 430 I/2.53	–	4 590 I/2.44	–	8 990 I/2.55	16 950 I/2.53	22 250 I/2.53	32 450 I/2.44	44 950 I/2.5	60 550 I/2.55	80 550 I/2.43	104 900 I/2.53	146 300 I/2.53	181 600 I/2.44	227 000 I/2.44	257 700 I/2.5			
								327	427	645	–	–	–	–	–	–	–	–	2.24	2800	**1250**
	2.24	–	–	–	–	–	–	16 750 I/2.28	22 100 I/2.3▲	32 100 I/2.21▲	43 750 I/2.24	59 950 I/2.2	81 750 I/2.27	106 100 I/2.33	145 200 I/2.3	183 800 I/2.26	229 700 I/2.26	256 200 I/2.29			
								328		658		–		–		–	–		2	2500	
	2	–	–	–	–	–	–	16 500 I/2	–	32 400 I/1.95▲	–	60 600 I/2.05	–	104 500 I/2	–	181 100 I/1.95	226 400 I/1.95	–			
14 000 000	12.5	970 2I/12.3	1 860 2I/13.1	2 310 2I/13.6	4 360 2I/13.7	5 130 2I/13.7	8 040 2I/12.3	16 100 2I/13.1	23 650 2I/13.3	35 550 2I/13.6	50 200 2I/13.6	71 900 2I/13	100 100 2I/12.8	144 100 2I/13.1	198 300 2I/13.3	250 800 2I/13.4	305 600 2I/13.4	396 900 2I/13.1			
	11.2	–	–	–	–	–	–	–	25 000 2I/11.9	37 150 2I/11.9	53 100 2I/11.8	75 650 2I/11.2	105 900 2I/11.5	152 000 2I/11.8	209 200 2I/11.9	265 500 2I/11.5	330 900 2I/11.5	418 600 2I/11.8			

For n_1 lower than 560 rpm see page 107.
▲ Possible forced lubrication with heat exchanger: consult us.

$n_{N2} \cdot L_h$ rpm · h	i_N	Nominal output power P_{N2} [hp] / Nominal output torque T_{N2} [lb in] / Train of gears / ratio ... / i																	i_N	n_1 rpm	n_{N2}
		50	63	64	80	81	100	125	140	160	180	200	225	250	280	320	321	360			
14 000 000	10	1 050 2I/10.2	1 960 2I/10.7	2 480 2I/11.2	4 410 2I/10.3	5 190 2I/10.3	8 480 2I/10.2	17 000 2I/10.7	24 350 2I/10.2	38 200 2I/10.3	50 600 2I/10.7	77 700 2I/10.2	108 800 2I/9.95	156 100 2I/10.7	214 900 2I/10.4	272 700 2I/10.3	340 000 2I/10.3	430 000 2I/10.7			
	9	–	–	–	–	–	–	–	22 550 2I/9.22	39 150 2I/9.24	45 250 2I/9.31	79 700 2I/8.85	101 400 2I/8.88	160 100 2I/9.19	207 500 2I/9.22	279 700 2I/9.24	348 700 2I/9.24	416 300 2I/9.31			
	8	1 110 2I/8.01	2 070 2I/8.26	2 570 2I/7.99	4 380 2I/8.03	5 220 2I/8.03	8 940 2I/8.01	17 900 2I/8.26	–	40 150 2I/8.03	–	81 950 2I/8.01	–	164 700 2I/8.26	–	287 600 2I/8.03	358 600 2I/8.03	–			
	6.3	1 040 2I/6.42	1 950 2I/6.53	2 320 2I/6.86	4 080 2I/6.41	4 650 2I/6.41	8 480 2I/6.42	17 000 2I/6.53	–	34 000 2I/6.41	–	78 000 2I/6.42	–	156 400 2I/6.53	–	265 100 2I/6.41	313 000 2I/6.41	–			
	5	–	2120 I/5	–	4500 I/5.2	–	6 800 I/4.82	13 850 I/5	20 800 I/5	32 300 I/4.92	40 100 I/5.07	60 100 I/4.92	76 850 I/5.07	97 250 I/5.08	152 000 I/5	192 100 I/4.92	240 100 I/4.92	265 500 I/5.07			
	4.5	–	–	–	–	–	–	14 050 I/4.45	21 150 I/4.5	32 900 I/4.5	42 800 I/4.67	61 200 I/4.5	78 400 I/4.67	112 400 I/4.47	137 100 I/4.5	195 000 I/4.5	243 700 I/4.5	267 800 I/4.6			
	4	–	2 270 I/4	–	4 690 I/4.16	–	6 980 I/3.92	14 200 I/4	22 150 I/4.08	33 400 I/4.13	42 150 I/4.15	62 150 I/4.13	81 100 I/4.07	105 100 I/4	153 000 I/4.08	195 500 I/4.07	244 300 I/4.07	259 900 I/4			
	3.55	–	–	–	–	–	–	17 300 I/3.62	22 050 I/3.64	31 150 I/3.62	45 300 I/3.6	61 350 I/3.57	81 050 I/3.67	112 500 I/3.62	145 000 I/3.64	188 500 I/3.5	235 600 I/3.5	259 600 I/3.6			
	3.15	–	2 520 I/3.28	–	4 740 I/3.13	–	9 250 I/3.27	17 500 I/3.28	22 400 I/3.13	33 500 I/3.13	45 200 I/3.25	62 300 I/3.27	82 450 I/3.18	108 400 I/3.28	158 000 I/3.19	187 300 I/3.13	234 200 I/3.13	259 000 I/3.25			
	2.8	–	–	–	–	–	–	17 350 I/2.75	22 300 I/2.82	33 250 I/2.81	45 900 I/2.83	63 200 I/2.82	80 650 I/2.83	115 600 I/2.81	146 400 I/2.82	185 900 I/2.81	232 300 I/2.81	263 100 I/2.83			
	2.5	–	44.3 2 520 I/2.53	–	86.5 4 760 I/2.44	–	162 9 310 I/2.55	309 17 550 I/2.53	406 23 050 I/2.53	611 33 650 I/2.44▲	828 46 600 I/2.5▲	– 62 750 I/2.55	– 83 450 I/2.43	– 108 700 I/2.53	– 151 600 I/2.53	– 188 100 I/2.44	– 235 200 I/2.44	– 267 000 I/2.5	2.5	2800	**1120**
	2.24	–	–	–	–	–	–	302 17 300 I/2.28	394 22 850 I/2.3	596 33 200 I/2.21▲	803 45 300 I/2.24▲	– 62 050 I/2.2	– 84 600 I/2.27	– 109 800 I/2.33	– 150 200 I/2.3	– 190 100 I/2.26	– 237 700 I/2.26	– 265 100 I/2.29	2.24	2500	
	2	–	–	–	–	–	–	297 16 750 I/2	–	609 33 450 I/1.95▲	–	– 62 600 I/2.05	–	– 108 000 I/2	–	– 187 200 I/1.95	– 234 000 I/1.95	–	2	2240	
12 500 000	14	–	–	–	–	–	–	–	23 650 2I/14.7	37 600 2I/14.1	52 300 2I/14.4	75 400 2I/13.9	94 100 2I/14.6	154 100 2I/14.6	187 000 2I/14.7	265 000 2I/14.3	324 000 2I/14.3	412 400 2I/14.4			
	12.5	995 2I/12.3	1 910 2I/13.1	2 390 2I/13.6	4 510 2I/13.7	5 300 2I/13.7	8 250 2I/12.3	16 550 2I/13.1	24 250 2I/13.3	36 800 2I/13.6	51 550 2I/13.6	73 800 2I/13	102 800 2I/12.8	147 900 2I/13.1	203 500 2I/13.3	257 400 2I/13.4	313 700 2I/13.4	407 500 2I/13.1			
	11.2	–	–	–	–	–	–	–	25 700 2I/11.9	38 200 2I/11.9	54 550 2I/11.8	77 700 2I/11.2	108 800 2I/11.5	156 100 2I/11.8	214 900 2I/11.9	272 700 2I/11.5	340 000 2I/11.5	430 000 2I/11.8			
	10	1 080 2I/10.2	2 010 2I/10.7	2 540 2I/11.2	4 560 2I/10.3	5 370 2I/10.3	8 690 2I/10.2	17 450 2I/10.7	24 950 2I/10.2	39 150 2I/10.3	51 900 2I/10.7	79 700 2I/10.2	111 600 2I/9.95	160 100 2I/10.7	220 400 2I/10.4	279 700 2I/10.3	348 700 2I/10.3	441 000 2I/10.7			
	9	–	–	–	–	–	–	–	23 200 2I/9.22	40 250 2I/9.24	46 550 2I/9.31	81 950 2I/8.85	104 300 2I/8.88	164 700 2I/9.19	213 400 2I/9.22	287 600 2I/9.24	358 600 2I/9.24	428 200 2I/9.31			

For n_1 lower than 560 rpm see page 107.
▲ Possible forced lubrication with heat exchanger: consult us.

$n_{N2} \cdot L_h$ rpm · h	i_N	Nominal output power P_{N2} [hp] / Nominal output torque T_{N2} [lb in] / Train of gears / ratio ... / i																	i_N	n_1 rpm	n_{N2}
		50	63	64	80	81	100	125	140	160	180	200	225	250	280	320	321	360			
12 500 000	8	1 150 2I/8.01	2 140 2I/8.26	2 650 2I/7.99	4 520 2I/8.03	5 390 2I/8.03	9 230 2I/8.01	18 500 2I/8.26	–	41 450 2I/8.03	–	84 600 2I/8.01	–	170 000 2I/8.26	–	297 000 2I/8.03	370 200 2I/8.03	–			
	6.3	1 060 2I/6.42	2 000 2I/6.53	2 380 2I/6.86	4 190 2I/6.41	4 770 2I/6.41	8 710 2I/6.42	17 450 2I/6.53	–	34 900 2I/6.41	–	80 050 2I/6.42	–	160 500 2I/6.53	–	272 100 2I/6.41	321 300 2I/6.41	–			
	5	–	2120 I/5	–	4500 I/5.2	–	7 030 I/4.82	14 300 I/5	21 550 I/5	33 450 I/4.92	41 450 I/5.07	62 150 I/4.92	79 500 I/5.07	100 600 I/5.08	157 300 I/5	198 800 I/4.92	248 400 I/4.92	274 700 I/5.07			
	4.5	–	–	–	–	–	–	14 500 I/4.45	21 800 I/4.5	33 950 I/4.5	44 200 I/4.67	63 150 I/4.5	80 900 I/4.67	116 000 I/4.47	141 500 I/4.5	201 300 I/4.5	251 600 I/4.5	276 400 I/4.6			
	4	–	2 350 I/4	–	4 860 I/4.16	–	7 230 I/3.92	14 700 I/4	22 950 I/4.08	34 600 I/4.13	43 650 I/4.15	64 350 I/4.13	84 050 I/4.07	108 900 I/4	158 500 I/4.08	202 500 I/4.07	253 100 I/4.07	269 300 I/4			
	3.55	–	–	–	–	–	–	17 900 I/3.62	22 850 I/3.64	32 300 I/3.62	46 950 I/3.6	63 600 I/3.57	84 000 I/3.67	116 600 I/3.62	150 200 I/3.64	195 400 I/3.5	244 200 I/3.5	269 000 I/3.6			
	3.15	–	2 610 I/3.28	–	4 910 I/3.13	–	9 590 I/3.27	18 150 I/3.28	23 200 I/3.13	34 700 I/3.13	46 850 I/3.25	64 600 I/3.27	85 450 I/3.18	112 400 I/3.28	163 800 I/3.19	194 200 I/3.13	242 700 I/3.13	268 500 I/3.25			
	2.8	–	–	–	–	–	–	291 18 000 I/2.75	363 23 100 I/2.82	544 34 450 I/2.81 ▲	745 47 550 I/2.83 ▲	1 030 65 500 I/2.82 ▲	– 83 550 I/2.83	– 119 700 I/2.81	– 151 700 I/2.82	– 192 500 I/2.81	– 240 700 I/2.81	– 272 600 I/2.83	2.8	2800	**1000**
	2.5	–	40.9 2 610 I/2.53	–	79.9 4 920 I/2.44	–	150 9 630 I/2.55	285 18 150 I/2.53	375 23 850 I/2.53	565 34 800 I/2.44	765 48 200 I/2.5 ▲	1 007 64 900 I/2.55 ▲	– 86 350 I/2.43	– 112 500 I/2.53	– 156 800 I/2.53	– 194 600 I/2.44	– 243 300 I/2.44	– 276 200 I/2.5	2.5	2500	
	2.24	–	–	–	–	–	–	279 17 900 I/2.28	365 23 600 I/2.3	552 34 300 I/2.21	743 46 800 I/2.24 ▲	1 036 64 100 I/2.2 ▲	– 87 450 I/2.27	– 113 500 I/2.33	– 155 300 I/2.3	– 196 500 I/2.26	– 245 600 I/2.26	– 274 000 I/2.29	2.24	2240	
	2	–	–	–	–	–	–	269 16 950 I/2	–	550 33 850 I/1.95	–	1 004 64 800 I/2.05 ▲	–	– 111 700 I/2	–	– 193 700 I/1.95	– 242 100 I/1.95	–	2	2000	
11 200 000	16	1 050 2I/16.3	1 920 2I/15.8	2 500 2I/16.5	4 660 2I/15.7	5 480 2I/15.7	8 240 2I/16.1	16 450 2I/15.8	24 350 2I/15.1	39 700 2I/15.7	50 800 2I/16.6	75 400 2I/16.1	99 450 2I/15.6	151 300 2I/16.2	193 900 2I/15.7	265 000 2I/15.9	330 000 2I/15.9	401 300 2I/16			
	14	–	–	–	–	–	–	–	24 250 2I/14.7	38 900 2I/14.1	53 700 2I/14.4	77 400 2I/13.9	96 600 2I/14.6	159 400 2I/14.6	191 900 2I/14.7	272 000 2I/14.3	332 600 2I/14.3	423 300 2I/14.4			
	12.5	1 030 2I/12.3	1 960 2I/13.1	2 470 2I/13.6	4 660 2I/13.7	5 480 2I/13.7	8 480 2I/12.3	17 000 2I/13.1	24 950 2I/13.3	38 000 2I/13.6	52 950 2I/13.6	75 800 2I/13	105 600 2I/12.8	151 900 2I/13.1	209 100 2I/13.3	264 500 2I/13.4	322 300 2I/13.4	418 600 2I/13.1			
	11.2	–	–	–	–	–	–	–	26 350 2I/11.9	39 150 2I/11.9	55 950 2I/11.8	79 700 2I/11.2	111 600 2I/11.5	160 100 2I/11.8	220 400 2I/11.9	279 700 2I/11.5	348 700 2I/11.5	441 000 2I/11.8			
	10	1 110 2I/10.2	2 070 2I/10.7	2 610 2I/11.2	4 710 2I/10.3	5 540 2I/10.3	8 940 2I/10.2	17 900 2I/10.7	25 650 2I/10.2	40 250 2I/10.3	53 400 2I/10.7	81 950 2I/10.2	114 700 2I/9.95	164 700 2I/10.7	226 700 2I/10.4	287 600 2I/10.3	358 600 2I/10.3	453 500 2I/10.7			
	9	–	–	–	–	–	–	–	23 950 2I/9.22	41 550 2I/9.24	48 050 2I/9.31	84 600 2I/8.85	107 600 2I/8.88	170 000 2I/9.19	220 300 2I/9.22	297 000 2I/9.24	370 200 2I/9.24	442 100 2I/9.31			
	8	1 180 2I/8.01	2 200 2I/8.26	2 730 2I/7.99	4 650 2I/8.03	5 540 2I/8.03	9 480 2I/8.01	19 000 2I/8.26	–	42 600 2I/8.03	–	86 950 2I/8.01	–	174 700 2I/8.26	–	305 100 2I/8.03	380 300 2I/8.03	–			

For n_1 lower than 560 rpm see page 107.
▲ Possible forced lubrication with heat exchanger: consult us.

$n_{N2} \cdot L_h$ rpm · h	i_N	50	63	64	80	81	100	125	140	160	180	200	225	250	280	320	321	360	i_N	n_1 rpm	n_{N2}
		Nominal output power P_{N2} [hp] / Nominal output torque T_{N2} [lb in] / Train of gears / ratio ... / i																			
11 200 000	6.3	1 090 2I/6.42	2 050 2I/6.53	2 450 2I/6.86	4 310 2I/6.41	4 900 2I/6.41	8 940 2I/6.42	17 950 2I/6.53	–	35 900 2I/6.41	–	82 250 2I/6.42	–	164 900 2I/6.53	–	279 500 2I/6.41	330 100 2I/6.41	–			
	5	–	2180 I/5	–	4620 I/5.2	–	7 260 I/4.82	14 800 I/5	22 250 I/5	34 500 I/4.92	42 800 I/5.07	64 150 I/4.92	82 050 I/5.07	103 800 I/5.08	162 300 I/5	205 100 I/4.92	256 400 I/4.92	283 500 I/5.07			
	4.5	–	–	–	–	–	–	15 000 I/4.45	22 600 I/4.5	35 150 I/4.5	45 750 I/4.67	65 400 I/4.5	83 800 I/4.67	120 200 I/4.47	146 600 I/4.5	208 500 I/4.5	260 600 I/4.5	286 300 I/4.6			
	4	–	2 440 I/4	–	5 030 I/4.16	–	7 500 I/3.92	15 250 I/4	23 800 I/4.08	35 850 I/4.13	45 250 I/4.15	66 700 I/4.13	87 100 I/4.07	112 800 I/4	164 300 I/4.08	209 900 I/4.07	262 400 I/4.07	279 100 I/4			
	3.55	–	–	–	–	–	–	18 550 I/3.62	23 700 I/3.64	33 500 I/3.62	48 650 I/3.6	65 900 I/3.57	87 100 I/3.67	120 800 I/3.62	155 700 I/3.64	202 500 I/3.5	253 100 I/3.5	278 900 I/3.6			
	3.15	–	35.8 2650 I/3.28	–	72.1 5 090 I/3.13	–	135 9 930 I/3.27	254 18 800 I/3.28	342 24 050 I/3.13	510 35 950 I/3.13	663 48 500 I/3.25▲	910 66 900 I/3.27▲	– 88 500 I/3.18	– 116 400 I/3.28	– 169 600 I/3.19	– 201 200 I/3.13	– 251 400 I/3.13	– 278 100 I/3.25	3.15	2800	**900**
	2.8	–	–	–	–	–	–	268 18 600 I/2.75	335 23 900 I/2.82	502 35 600 I/2.81	689 49 200 I/2.83▲	952 67 750 I/2.82▲	– 86 450 I/2.83	– 123 900 I/2.81	– 156 900 I/2.82	– 199 200 I/2.81	– 249 000 I/2.81	– 282 000 I/2.83	2.8	2500	
	2.5	–	37.9 2 700 I/2.53	–	74 5 090 I/2.44	–	138 9 960 I/2.55	264 18 800 I/2.53	347 24 650 I/2.53	523 35 950 I/2.44	708 49 800 I/2.5	933 67 100 I/2.55▲	1 306 89 200 I/2.43▲	– 116 200 I/2.53	– 162 100 I/2.53	– 201 200 I/2.44	– 251 400 I/2.44	– 285 500 I/2.5	2.5	2240	
	2.24	–	–	–	–	–	–	258 18 500 I/2.28	337 24 450 I/2.3	510 35 500 I/2.21	684 48 250 I/2.24	957 66 350 I/2.2▲	1 263 90 450 I/2.27▲	– 117 400 I/2.33	– 160 600 I/2.3	– 203 300 I/2.26	– 254 100 I/2.26	– 283 400 I/2.29	2.24	2000	
	2	–	–	–	–	–	–	245 17 200 I/2	–	495 33 850 I/1.95	–	933 66 850 I/2.05▲	–	– 115 300 I/2	–	– 199 900 I/1.95	– 249 900 I/1.95	–	2	1800	
10 000 000	18	–	–	–	–	–	–	–	24 900 2I/17.6	38 200 2I/18.1	51 100 2I/18	75 400 2I/17.6	105 800 2I/18.1	151 300 2I/17.8	208 600 2I/17.9	265 000 2I/17.8	330 000 2I/17.8	414 700 2I/18.3			
	16	1 080 2I/16.3	1 980 2I/15.8	2 590 2I/16.5	4 820 2I/15.7	5 670 2I/15.7	8 460 2I/16.1	16 900 2I/15.8	25 000 2I/15.1	41 100 2I/15.7	52 150 2I/16.6	77 400 2I/16.1	102 100 2I/15.6	155 300 2I/16.2	199 100 2I/15.7	272 000 2I/15.9	338 800 2I/15.9	411 900 2I/16			
	14	–	–	–	–	–	–	–	24 950 2I/14.7	40 250 2I/14.1	55 150 2I/14.4	79 550 2I/13.9	99 250 2I/14.6	164 800 2I/14.6	197 200 2I/14.7	279 500 2I/14.3	341 700 2I/14.3	434 900 2I/14.4			
	12.5	1 060 2I/12.3	2 010 2I/13.1	2 560 2I/13.6	4 820 2I/13.7	5 670 2I/13.7	8 690 2I/12.3	17 450 2I/13.1	25 550 2I/13.3	39 300 2I/13.6	54 300 2I/13.6	77 750 2I/13	108 300 2I/12.8	155 800 2I/13.1	214 400 2I/13.3	271 200 2I/13.4	330 500 2I/13.4	429 300 2I/13.1			
	11.2	–	–	–	–	–	–	–	27 100 2I/11.9	40 250 2I/11.9	57 550 2I/11.8	81 950 2I/11.2	114 700 2I/11.5	164 700 2I/11.8	226 700 2I/11.9	287 600 2I/11.5	358 600 2I/11.5	453 500 2I/11.8			
	10	1 150 2I/10.2	2 140 2I/10.7	2 700 2I/11.2	4 880 2I/10.3	5 740 2I/10.3	9 230 2I/10.2	18 500 2I/10.7	26 500 2I/10.2	41 550 2I/10.3	55 100 2I/10.7	84 600 2I/10.2	118 500 2I/9.95	170 000 2I/10.7	234 000 2I/10.4	297 000 2I/10.3	370 200 2I/10.3	468 200 2I/10.7			
	9	–	–	–	–	–	–	–	24 600 2I/9.22	42 700 2I/9.24	49 350 2I/9.31	86 950 2I/8.85	110 600 2I/8.88	174 700 2I/9.19	226 300 2I/9.22	305 100 2I/9.24	380 300 2I/9.24	454 200 2I/9.31			
	8	1 210 2I/8.01	2 250 2I/8.26	2 800 2I/7.99	4 770 2I/8.03	5 690 2I/8.03	9 740 2I/8.01	19 500 2I/8.26	–	43 700 2I/8.03	–	89 250 2I/8.01	–	179 300 2I/8.26	–	313 200 2I/8.03	390 400 2I/8.03	–			

For n_1 lower than 560 rpm see page 107.
▲ Possible forced lubrication with heat exchanger: consult us.

$n_{N2} \cdot L_h$ rpm · h	i_N	Nominal output power P_{N2} [hp] / Nominal output torque T_{N2} [lb in] / Train of gears / ratio ... / i																	i_N	n_1 rpm	n_{N2} rpm
		50	63	64	80	81	100	125	140	160	180	200	225	250	280	320	321	360			
10 000 000	6.3	1 110 2I/6.42	2 080 2I/6.53	2 480 2I/6.86	4 360 2I/6.41	4 970 2I/6.41	9 070 2I/6.42	18 150 2I/6.53	–	36 350 2I/6.41	–	83 400 2I/6.42	–	167 100 2I/6.53	–	283 400 2I/6.41	334 600 2I/6.41	–			
	5	–	2180 I/5	–	4620 I/5.2	–	7 520 I/4.82	15 300 I/5	23 050 I/5	35 750 I/4.92	44 350 I/5.07	66 450 I/4.92	85 050 I/5.07	107 600 I/5.08	168 200 I/5	212 500 I/4.92	265 600 I/4.92	293 700 I/5.07			
	4.5	–	–	–	–	–	–	15 550 I/4.45	23 450 I/4.5	36 450 I/4.5	47 450 I/4.67	67 800 I/4.5	86 900 I/4.67	124 600 I/4.47	151 900 I/4.5	216 100 I/4.5	270 100 I/4.5	296 800 I/4.6			
	4	–	2 530 I/4	–	5 220 I/4.16	–	7 770 I/3.92	15 800 I/4	24 650 I/4.08	37 200 I/4.13	46 900 I/4.15	69 150 I/4.13	90 300 I/4.07	117 000 I/4	170 300 I/4.08	217 500 I/4.07	271 900 I/4.07	289 300 I/4			
								236	299	426	622	849	–	–	–	–	–	–	3.55	2800	800
	3.55	–	–	–	–	–	–	19 250 I/3.62	24 550 I/3.64	34 700 I/3.62	50 400 I/3.6	68 300 I/3.57▲	90 200 I/3.67	125 200 I/3.62	161 300 I/3.64	209 800 I/3.5	262 200 I/3.5	288 900 I/3.6			
			32		66.6		125	235	316	471	613	840	1 143	–	–	–	–	–	3.15	2500	
	3.15	–	2650 I/3.28	–	5 260 I/3.13	–	10 250 I/3.27	19 450 I/3.28	24 900 I/3.13	37 200 I/3.13	50 200 I/3.25	69 200 I/3.27▲	91 600 I/3.18▲	120 400 I/3.28	175 500 I/3.19	208 100 I/3.13	260 100 I/3.13	287 700 I/3.25			
								249	311	465	638	881	1 121	–	–	–	–	–	2.8	2240	
	2.8	–	–	–	–	–	–	19 250 I/2.75	24 700 I/2.82	36 800 I/2.81	50 850 I/2.83	70 050 I/2.82▲	89 350 I/2.83▲	128 000 I/2.81	162 200 I/2.82	205 900 I/2.81	257 300 I/2.81	291 400 I/2.83			
			35		68.3		128	244	320	483	654	862	1 206	1 509	–	–	–	–	2.5	2000	
	2.5	–	2 790 I/2.53	–	5 260 I/2.44	–	10 300 I/2.55	19 450 I/2.53	25 500 I/2.53	37 200 I/2.44	51 550 I/2.5	69 400 I/2.55	92 300 I/2.43▲	120 300 I/2.53▲	167 700 I/2.53	208 100 I/2.44	260 100 I/2.44	295 400 I/2.5			
								240	313	473	615	889	1 173	1 483	–	–	–	–	2.24	1800	
	2.24	–	–	–	–	–	–	19 100 I/2.28	25 200 I/2.3	36 650 I/2.21	48 250 I/2.24	68 450 I/2.2	93 350 I/2.27▲	121 200 I/2.33▲	165 800 I/2.3	209 800 I/2.26	262 300 I/2.26	292 500 I/2.29			
								221		440		859		1 516		–	–		2	1600	
	2	–	–	–	–	–	–	17 400 I/2	–	33 850 I/1.95	–	69 250 I/2.05	–	119 500 I/2▲	–	207 100 I/1.95	258 800 I/1.95	–			
9 000 000	20	1060 2I/20.1	1 990 2I/19.3	2 590 2I/20.1	4 920 2I/20.8	5600 2I/20.8	8 440 2I/19.3	16 850 2I/19.3	25 450 2I/19.6	40 200 2I/20.7	51 450 2I/20.8	73 950 2I/20.3	102 800 2I/20	149 700 2I/19.7	202 900 2I/20.1	257 200 2I/20.6	312 600 2I/20.6	406 500 2I/20.3			
	18	–	–	–	–	–	–	–	25 600 2I/17.6	39 500 2I/18.1	52 900 2I/18	77 400 2I/17.6	108 600 2I/18.1	155 300 2I/17.8	214 200 2I/17.9	272 000 2I/17.8	338 800 2I/17.8	425 700 2I/18.3			
	16	1 120 2I/16.3	2 050 2I/15.8	2 670 2I/16.5	4 980 2I/15.7	5 860 2I/15.7	8 690 2I/16.1	17 350 2I/15.8	25 700 2I/15.1	42 450 2I/15.7	53 550 2I/16.6	79 550 2I/16.1	104 900 2I/15.6	159 600 2I/16.2	204 600 2I/15.7	279 500 2I/15.9	348 100 2I/15.9	423 200 2I/16			
	14	–	–	–	–	–	–	–	25 600 2I/14.7	41 600 2I/14.1	56 550 2I/14.4	81 550 2I/13.9	101 800 2I/14.6	170 500 2I/14.6	202 200 2I/14.7	286 600 2I/14.3	350 400 2I/14.3	446 000 2I/14.4			
	12.5	1 100 2I/12.3	2 070 2I/13.1	2 640 2I/13.6	4 980 2I/13.7	5 850 2I/13.7	8 940 2I/12.3	17 900 2I/13.1	26 300 2I/13.3	40 600 2I/13.6	55 850 2I/13.6	79 950 2I/13	111 400 2I/12.8	160 300 2I/13.1	220 600 2I/13.3	278 900 2I/13.4	339 900 2I/13.4	441 500 2I/13.1			
	11.2	–	–	–	–	–	–	–	27 950 2I/11.9	41 550 2I/11.9	59 400 2I/11.8	84 600 2I/11.2	118 500 2I/11.5	170 000 2I/11.8	234 000 2I/11.9	297 000 2I/11.5	370 200 2I/11.5	468 200 2I/11.8			
	10	1 180 2I/10.2	2 200 2I/10.7	2 770 2I/11.2	5 060 2I/10.3	5 950 2I/10.3	9 480 2I/10.2	19 000 2I/10.7	27 200 2I/10.2	43 000 2I/10.3	56 650 2I/10.7	86 950 2I/10.2	121 700 2I/9.95	174 700 2I/10.7	240 400 2I/10.4	305 100 2I/10.3	380 300 2I/10.3	481 000 2I/10.7			
	9	–	–	–	–	–	–	–	25 250 2I/9.22	43 850 2I/9.24	50 700 2I/9.31	89 250 2I/8.85	113 500 2I/8.88	179 300 2I/9.19	232 300 2I/9.22	313 200 2I/9.24	390 400 2I/9.24	466 200 2I/9.31			

For n_1 lower than 560 rpm see page 107.
▲ Possible forced lubrication with heat exchanger: consult us.

$n_{N2} \cdot L_h$ rpm · h	i_N	Nominal output power P_{N2} [hp] / Nominal output torque T_{N2} [lb in] / Train of gears / ratio ... / i																	i_N	n_1 rpm	n_{N2}
		50	63	64	80	81	100	125	140	160	180	200	225	250	280	320	321	360			
9 000 000	8	1 240 2I/8.01	2 320 2I/8.26	2 870 2I/7.99	4 900 2I/8.03	5 840 2I/8.03	10 000 2I/8.01	20 050 2I/8.26	–	44 900 2I/8.03	–	91 700 2I/8.01	–	184 200 2I/8.26	–	321 800 2I/8.03	401 100 2I/8.03	–			
	6.3	1 120 2I/6.42	2 110 2I/6.53	2 510 2I/6.86	4 420 2I/6.41	5 030 2I/6.41	9 180 2I/6.42	18 400 2I/6.53	–	36 850 2I/6.41	–	84 450 2I/6.42	–	169 300 2I/6.53	–	286 900 2I/6.41	338 800 2I/6.41	–			
	5	–	2240 I/5	–	4750 I/5.2	–	7 790 I/4.82	15 850 I/5	23 850 I/5	37 050 I/4.92	45 950 I/5.07	68 900 I/4.92	88 150 I/5.07	111 500 I/5.08	174 300 I/5	220 300 I/4.92	275 300 I/4.92	304 400 I/5.07			
	4.5	–	–	–	–	–	–	16 100 I/4.45	24 300 I/4.5	37 800 I/4.5	49 150 I/4.67	70 300 I/4.5	90 050 I/4.67	129 100 I/4.47	157 500 I/4.5	224 000 I/4.5	280 000 I/4.5	307 600 I/4.6			
			29.1		57.6		91.2	182	278	414	520	770	–	–	–	–	–	–	4	2800	710
	4	–	2 620 I/4	–	5 410 I/4.16	–	8 050 I/3.92	16 350 I/4	25 550 I/4.08	38 500 I/4.13	48 600 I/4.15	71 650 I/4.13	93 550 I/4.07	121 200 I/4	176 400 I/4.08	225 400 I/4.07	281 700 I/4.07	299 700 I/4			
								218	277	394	574	785	1 010	–	–	–	–	–	3.55	2500	
	3.55	–	–	–	–	–	–	19 900 I/3.62	25 400 I/3.64	35 900 I/3.62	52 150 I/3.6	70 650 I/3.57	93 350 I/3.67▲	129 500 I/3.62	166 900 I/3.64	217 000 I/3.5	271 300 I/3.5	298 900 I/3.6			
			29.4		61.7		116	218	293	436	567	778	1 059	–	–	–	–	–	3.15	2240	
	3.15	–	2720 I/3.28	–	5 440 I/3.13	–	10 600 I/3.27	20 100 I/3.28	25 700 I/3.13	38 450 I/3.13	51 850 I/3.25	71 550 I/3.27	94 650 I/3.18▲	124 500 I/3.28	181 400 I/3.19	215 100 I/3.13	268 800 I/3.13	297 400 I/3.25			
								230	287	430	589	814	1 035	1 495	1 886	–	–	–	2.8	2000	
	2.8	–	–	–	–	–	–	19 900 I/2.75	25 550 I/2.82	38 100 I/2.81	52 600 I/2.83	72 450 I/2.82	92 450 I/2.83▲	132 500 I/2.81▲	167 800 I/2.82▲	213 000 I/2.81	266 200 I/2.81	301 500 I/2.83			
			31.6		63.5		119	226	298	449	608	800	1 120	1 401	1 956	–	–	–	2.5	1800	
	2.5	–	2800 I/2.53	–	5 430 I/2.44	–	10 650 I/2.55	20 050 I/2.53	26 350 I/2.53	38 400 I/2.44	53 200 I/2.5	71 650 I/2.55	95 250 I/2.43	124 100 I/2.53▲	173 100 I/2.53▲	214 800 I/2.44	268 500 I/2.44	304 900 I/2.5			
								221	288	436	547	818	1 080	1 366	1 895	–	–	–	2.24	1600	
	2.24	–	–	–	–	–	–	19 800 I/2.28	26 150 I/2.3	37 950 I/2.21	48 250 I/2.24	70 900 I/2.2	96 700 I/2.27	125 500 I/2.33▲	171 700 I/2.3▲	217 400 I/2.26	271 700 I/2.26	303 100 I/2.29			
								197		385		782		1 381		–	–		2	1400	
	2	–	–	–	–	–	–	17 700 I/2	–	33 850 I/1.95	–	72 100 I/2.05	–	124 400 I/2▲	–	215 500 I/1.95	269 400 I/1.95	–			
8 000 000	22.4	–	–	–	–	–	–	–	25 950 2I/21.7	40 750 2I/22.5	53 200 2I/23.3	75 000 2I/22.2	96 750 2I/23	172 800 2I/22	191 200 2I/22.2	242 500 2I/22.8	303 300 2I/22.8	383 000 2I/23.4			
	20	1060 2I/20.1	2 060 2I/19.3	2 680 2I/20.1	5 090 2I/20.8	5800 2I/20.8	8 730 2I/19.3	17 450 2I/19.3	26 350 2I/19.6	41 600 2I/20.7	52 800 2I/20.8	76 500 2I/20.3	105 500 2I/20	154 900 2I/19.7	208 200 2I/20.1	264 000 2I/20.6	320 900 2I/20.6	417 300 2I/20.3			
	18	–	–	–	–	–	–	–	26 300 2I/17.6	40 800 2I/18.1	54 650 2I/18	79 550 2I/17.6	111 600 2I/18.1	159 600 2I/17.8	220 000 2I/17.9	279 500 2I/17.8	348 100 2I/17.8	437 400 2I/18.3			
	16	1 160 2I/16.3	2 120 2I/15.8	2 770 2I/16.5	5 160 2I/15.7	6 070 2I/15.7	8 990 2I/16.1	17 800 2I/15.8	26 350 2I/15.1	43 950 2I/15.7	54 950 2I/16.6	81 550 2I/16.1	107 600 2I/15.6	163 600 2I/16.2	209 800 2I/15.7	286 600 2I/15.9	356 900 2I/15.9	434 000 2I/16			
	14	–	–	–	–	–	–	–	26 450 2I/14.7	42 950 2I/14.1	58 150 2I/14.4	83 900 2I/13.9	104 700 2I/14.6	176 000 2I/14.6	208 000 2I/14.7	294 800 2I/14.3	360 400 2I/14.3	458 700 2I/14.4			
	12.5	1 140 2I/12.3	2 140 2I/13.1	2 740 2I/13.6	5 140 2I/13.7	6 040 2I/13.7	9 230 2I/12.3	18 500 2I/13.1	27 150 2I/13.3	42 050 2I/13.6	57 650 2I/13.6	82 550 2I/13	115 000 2I/12.8	165 400 2I/13.1	227 700 2I/13.3	288 000 2I/13.4	350 900 2I/13.4	455 800 2I/13.1			
	11.2	–	–	–	–	–	–	–	28 700 2I/11.9	42 700 2I/11.9	61 000 2I/11.8	86 950 2I/11.2	121 700 2I/11.5	174 700 2I/11.8	240 400 2I/11.9	305 100 2I/11.5	380 300 2I/11.5	481 000 2I/11.8			

For n_1 lower than 560 rpm see page 107.
▲ Possible forced lubrication with heat exchanger: consult us.

$n_{N2} \cdot L_h$ rpm · h	i_N	Nominal output power P_{N2} [hp] / Nominal output torque T_{N2} [lb in] / Train of gears / ratio ... / i																	i_N	n_1 rpm	n_{N2}
		50	63	64	80	81	100	125	140	160	180	200	225	250	280	320	321	360			
8 000 000	10	1 210 2I/10.2	2 250 2I/10.7	2 840 2I/11.2	5 240 2I/10.3	6 170 2I/10.3	9 740 2I/10.2	19 500 2I/10.7	27 950 2I/10.2	44 550 2I/10.3	58 150 2I/10.7	89 250 2I/10.2	124 900 2I/9.95	179 300 2I/10.7	246 800 2I/10.4	313 200 2I/10.3	390 400 2I/10.3	493 800 2I/10.7			
	9	–	–	–	–	–	–	–	25 950 2I/9.22	45 050 2I/9.24	52 050 2I/9.31	91 700 2I/8.85	116 600 2I/8.88	184 200 2I/9.19	238 700 2I/9.22	321 800 2I/9.24	401 100 2I/9.24	479 000 2I/9.31			
	8	1 260 2I/8.01	2 350 2I/8.26	2 910 2I/7.99	4 970 2I/8.03	5 920 2I/8.03	10 150 2I/8.01	20 300 2I/8.26	–	45 550 2I/8.03	–	92 950 2I/8.01	–	186 700 2I/8.26	–	326 200 2I/8.03	406 600 2I/8.03	–			
	6.3	1 140 2I/6.42	2 140 2I/6.53	2 550 2I/6.86	4 480 2I/6.41	5 100 2I/6.41	9 310 2I/6.42	18 650 2I/6.53	–	37 350 2I/6.41	–	85 650 2I/6.42	–	171 700 2I/6.53	–	291 000 2I/6.41	343 600 2I/6.41	–			
	5	–	2240 I/5	–	4750 I/5.2	–	8 080 I/4.82	16 450 I/5	24 750 I/5	38 400 I/4.92	47 650 I/5.07	71 400 I/4.92	91 350 I/5.07	115 500 I/5.08	180 700 I/5	228 300 I/4.92	285 400 I/4.92	315 500 I/5.07			
								166	248	386	485	719	–	–	–	–	–	–	4.5	2800	630
	4.5	–	–	–	–	–	–	16 700 I/4.45	25 150 I/4.5	39 150 I/4.5	50 950 I/4.67	72 800 I/4.5	93 300 I/4.67	133 800 I/4.47	163 100 I/4.5	232 000 I/4.5	290 100 I/4.5	318 700 I/4.6			
			26.9		53.2		84.2	168	257	382	480	711	943	–	–	–	–	–	4	2500	
	4	–	2 710 I/4	–	5 590 I/4.16	–	8 330 I/3.92	16 900 I/4	26 400 I/4.08	39 850 I/4.13	50 300 I/4.15	74 100 I/4.13	96 750 I/4.07	125 400 I/4	182 500 I/4.08	233 200 I/4.07	291 500 I/4.07	310 000 I/4			
								202	256	365	532	727	935	–	–	–	–	–	3.55	2240	
	3.55	–	–	–	–	–	–	20 550 I/3.62	26 250 I/3.64	37 100 I/3.62	53 900 I/3.6	73 000 I/3.57	96 450 I/3.67	133 800 I/3.62	172 500 I/3.64	224 300 I/3.5	280 400 I/3.5	308 900 I/3.6			
			26.3		57		107	201	270	403	524	719	978	1 244	1 868	–	–	–	3.15	2000	
	3.15	–	2720 I/3.28	–	5 630 I/3.13	–	11 000 I/3.27	20 800 I/3.28	26 600 I/3.13	39 800 I/3.13	53 650 I/3.25	74 000 I/3.27	97 900 I/3.18	128 800 I/3.28▲	187 700 I/3.19▲	222 500 I/3.13	278 100 I/3.13	307 700 I/3.25			
								213	267	399	547	756	962	1 388	1 752	–	–	–	2.8	1800	
	2.8	–	–	–	–	–	–	20 550 I/2.75	26 350 I/2.82	39 300 I/2.81	54 300 I/2.83	74 800 I/2.82	95 400 I/2.83	136 700 I/2.81▲	173 200 I/2.82▲	219 800 I/2.81	274 800 I/2.81	311 200 I/2.83			
			28.1		58.4		109	209	274	413	547	737	1 032	1 290	1 801	2 311	2 888	–	2.5	1600	
	2.5	–	2800 I/2.53	–	5 630 I/2.44	–	11 000 I/2.55	20 800 I/2.53	27 300 I/2.53	39 800 I/2.44	53 900 I/2.5	74 200 I/2.55	98 700 I/2.43	128 600 I/2.53	179 300 I/2.53▲	222 500 I/2.44▲	278 100 I/2.44▲	315 800 I/2.5			
								201	263	385	479	745	984	1 244	1 726	2 221	2 776	–	2.24	1400	
	2.24	–	–	–	–	–	–	20 600 I/2.28	27 200 I/2.3	38 300 I/2.21	48 250 I/2.24	73 800 I/2.2	100 700 I/2.27	130 700 I/2.33	178 800 I/2.3▲	226 300 I/2.26▲	282 800 I/2.26▲	315 400 I/2.29			
								178		344		707		1 276		2 265	2 831		2	1250	
	2	–	–	–	–	–	–	17 950 I/2	–	33 850 I/1.95	–	73 000 I/2.05	–	128 700 I/2	–	223 000 I/1.95▲	278 700 I/1.95▲	–			
7 100 000	25	925 2I/24.4	1950 2I/24.1	2430 2I/25.1	4250 2I/26	4870 2I/26	8 710 2I/23.7	17 500 2I/24.1	25 700 2I/24.1	38 700 2I/24.6	51 300 2I/25.4	76 050 2I/24.2	97 400 2I/25	153 500 2I/25	193 400 2I/24.6	221 000 2I/25	308 400 2I/25	352 900 2I/25.7			
	22.4	–	–	–	–	–	–	–	26 850 2I/21.7	42 150 2I/22.5	55 050 2I/23.3	77 550 2I/22.2	99 550 2I/23	175 000 2I/22	196 300 2I/22.2	248 900 2I/22.8	313 800 2I/22.8	393 200 2I/23.4			
	20	1090 2I/20.1	2 130 2I/19.3	2 770 2I/20.1	5 150 2I/20.8	6 060 2I/20.8	9 030 2I/19.3	18 050 2I/19.3	27 250 2I/19.6	42 950 2I/20.7	54 250 2I/20.8	79 050 2I/20.3	108 400 2I/20	160 100 2I/19.7	213 900 2I/20.1	271 200 2I/20.6	329 700 2I/20.6	428 800 2I/20.3			
	18	–	–	–	–	–	–	–	27 050 2I/17.6	42 250 2I/18.1	56 550 2I/18	81 550 2I/17.6	114 400 2I/18.1	164 100 2I/17.8	225 600 2I/17.9	286 600 2I/17.8	356 900 2I/17.8	448 500 2I/18.3			
	16	1 190 2I/16.3	2 190 2I/15.8	2 860 2I/16.5	5 320 2I/15.7	6 260 2I/15.7	9 280 2I/16.1	18 300 2I/15.8	27 100 2I/15.1	45 350 2I/15.7	56 500 2I/16.6	83 900 2I/16.1	110 600 2I/15.6	168 300 2I/16.2	215 700 2I/15.7	294 800 2I/15.9	367 100 2I/15.9	446 400 2I/16			

For n_1 lower than 560 rpm see page 107.
▲ Possible forced lubrication with heat exchanger: consult us.

$n_{N2} \cdot L_h$ rpm · h	i_N	Nominal output power P_{N2} [hp] / Nominal output torque T_{N2} [lb in] / Train of gears / ratio ... / i																	i_N	n_1 rpm	n_{N2}
		50	63	64	80	81	100	125	140	160	180	200	225	250	280	320	321	360			
7 100 000	14	–	–	–	–	–	–	–	27 400 2I/14.7	44 500 2I/14.1	60 050 2I/14.4	86 600 2I/13.9	108 100 2I/14.6	182 300 2I/14.6	214 700 2I/14.7	304 300 2I/14.3	372 000 2I/14.3	473 500 2I/14.4			
	12.5	1 180 2I/12.3	2 200 2I/13.1	2 840 2I/13.6	5 160 2I/13.7	6 060 2I/13.7	9 480 2I/12.3	19 000 2I/13.1	27 900 2I/13.3	43 600 2I/13.6	59 250 2I/13.6	84 800 2I/13	118 200 2I/12.8	170 000 2I/13.1	233 900 2I/13.3	295 800 2I/13.4	360 500 2I/13.4	468 300 2I/13.1			
	11.2	–	–	–	–	–	–	–	29 500 2I/11.9	43 850 2I/11.9	62 650 2I/11.8	89 250 2I/11.2	124 900 2I/11.5	179 300 2I/11.8	246 800 2I/11.9	313 200 2I/11.5	390 400 2I/11.5	493 800 2I/11.8			
	10	1 240 2I/10.2	2 320 2I/10.7	2 940 2I/11.2	5 430 2I/10.3	6 390 2I/10.3	10 000 2I/10.2	20 050 2I/10.7	28 700 2I/10.2	46 150 2I/10.3	59 700 2I/10.7	91 700 2I/10.2	128 400 2I/9.95	184 200 2I/10.7	253 600 2I/10.4	321 800 2I/10.3	401 100 2I/10.3	507 300 2I/10.7			
	9	–	–	–	–	–	–	–	26 300 2I/9.22	45 650 2I/9.24	52 800 2I/9.31	92 950 2I/8.85	118 200 2I/8.88	186 700 2I/9.19	241 900 2I/9.22	326 200 2I/9.24	406 600 2I/9.24	485 500 2I/9.31			
	8	1 270 2I/8.01	2 380 2I/8.26	2 950 2I/7.99	5 090 2I/8.03	6 000 2I/8.03	10 250 2I/8.01	20 600 2I/8.26	–	46 100 2I/8.03	–	94 100 2I/8.01	–	189 100 2I/8.26	–	330 300 2I/8.03	411 700 2I/8.03	–			
	6.3	1 150 2I/6.42	2 170 2I/6.53	2 590 2I/6.86	4 550 2I/6.41	5 170 2I/6.41	9 440 2I/6.42	18 950 2I/6.53	–	37 900 2I/6.41	–	86 850 2I/6.42	–	174 100 2I/6.53	–	295 200 2I/6.41	348 500 2I/6.41	–			
	5	–	20.4 2300 I/5	–	42.3 4 960 I/5.2	–	77.2 8 370 I/4.82	151 17 050 I/5	228 25 650 I/5	359 39 800 I/4.92	432 49 350 I/5.07	668 74 000 I/4.92	– 94 650 I/5.07	– 119 700 I/5.08	– 187 200 I/5	– 236 500 I/4.92	– 295 600 I/4.92	– 326 900 I/5.07	5	2800	**560**
	4.5	–	–	–	–	–	–	154 17 250 I/4.45	229 26 050 I/4.5	357 40 500 I/4.5	448 52 700 I/4.67	664 75 300 I/4.5	820 96 500 I/4.67	– 138 400 I/4.47	– 168 800 I/4.5	– 240 100 I/4.5	– 300 100 I/4.5	– 329 700 I/4.6	4.5	2500	
	4	–	24.2 2720 I/4	–	49.3 5 780 I/4.16	–	78 8 610 I/3.92	155 17 500 I/4	238 27 300 I/4.08	354 41 200 I/4.13	445 51 950 I/4.15	659 76 600 I/4.13	873 100 000 I/4.07	– 129 600 I/4	– 188 600 I/4.08	– 241 000 I/4.07	– 301 200 I/4.07	– 320 400 I/4	4	2240	
	3.55	–	–	–	–	–	–	187 21 250 I/3.62	237 27 150 I/3.64	337 38 400 I/3.62	491 55 750 I/3.6	671 75 550 I/3.57	864 99 800 I/3.67	1 215 138 500 I/3.62	1 554 178 500 I/3.64▲	– 232 100 I/3.5	– 290 100 I/3.5	– 319 600 I/3.6	3.55	2000	
	3.15	–	24.3 2800 I/3.28	–	52.9 5 810 I/3.13	–	99.1 11 350 I/3.27	187 21 500 I/3.28	251 27 450 I/3.13	374 41 050 I/3.13	487 55 400 I/3.25	668 76 400 I/3.27	909 101 100 I/3.18	1 155 132 900 I/3.28	1 735 193 700 I/3.19▲	2 093 229 700 I/3.13▲	2 616 287 100 I/3.13▲	– 317 500 I/3.25	3.15	1800	
	2.8	–	–	–	–	–	–	196 21 250 I/2.75	245 27 300 I/2.82	368 40 700 I/2.81	504 56 250 I/2.83	696 77 450 I/2.82	886 98 850 I/2.83	1 278 141 600 I/2.81	1 613 179 400 I/2.82▲	2 055 227 700 I/2.81▲	2 569 284 700 I/2.81▲	– 322 400 I/2.83	2.8	1600	
	2.5	–	25.5 2900 I/2.53	–	53.2 5 860 I/2.44	–	99.6 11 450 I/2.55	190 21 650 I/2.53	250 28 400 I/2.53	376 41 400 I/2.44	479 53 900 I/2.5	671 77 250 I/2.55	940 102 700 I/2.43	1 175 133 800 I/2.53	1 641 186 600 I/2.53	2 105 231 600 I/2.44▲	2 631 289 500 I/2.44▲	2 921 328 700 I/2.5▲	2.5	1400	
	2.24	–	–	–	–	–	–	186 21 350 I/2.28	243 28 150 I/2.3	344 38 300 I/2.21	427 48 250 I/2.24	688 76 350 I/2.2	886 101 600 I/2.27	1 149 135 200 I/2.33	1 595 184 900 I/2.3	2 051 234 100 I/2.26▲	2 564 292 600 I/2.26▲	2 832 326 300 I/2.29▲	2.24	1250	
	2	–	–	–	–	–	–	162 18 200 I/2	–	308 33 850 I/1.95	–	633 73 000 I/2.05	–	1 181 133 000 I/2	–	2 098 230 500 I/1.95▲	2 622 288 100 I/1.95▲	–	2	1120	
6 300 000	28	–	–	–	–	–	7 750 2I/28.8	–	22 250 3I/29.1	38 000 3I/28.4	44 600 3I/28.6	77 150 3I/27.2	100 200 3I/27.3	154 900 3I/28.7	200 200 3I/28.8	271 300 3I/30	337 600 3I/30	410 900 3I/30.3			
	25	950 2I/24.4	2000 2I/24.1	2500 2I/25.1	4 360 2I/26	5000 2I/26	9 010 2I/23.7	18 100 2I/24.1	25 700 2I/24.1	38 700 2I/24.6	53 100 2I/25.4	78 650 2I/24.2	100 800 2I/25	158 900 2I/25	200 100 2I/24.6	226 900 2I/25	319 100 2I/25	362 300 2I/25.7			

For n_1 lower than 560 rpm see page 107.
▲ Possible forced lubrication with heat exchanger: consult us.

$n_{N2} \cdot L_h$ rpm · h	i_N	50	63	64	80	81	100	125	140	160	180	200	225	250	280	320	321	360	i_N	n_1 rpm	n_{N2}
		Nominal output power P_{N2} [hp] Nominal output torque T_{N2} [lb in] Train of gears / ratio ... / i																			
6 300 000	22.4	–	–	–	–	–	–	–	27 750 **2I/21.7**	43 550 **2I/22.5**	56 900 **2I/23.3**	80 150 **2I/22.2**	102 900 **2I/23**	180 000 **2I/22**	201 700 **2I/22.2**	255 700 **2I/22.8**	324 300 **2I/22.8**	404 000 **2I/23.4**			
	20	1120 **2I/20.1**	2 200 **2I/19.3**	2 870 **2I/20.1**	5 170 **2I/20.8**	6 080 **2I/20.8**	9 340 **2I/19.3**	18 650 **2I/19.3**	28 200 **2I/19.6**	44 450 **2I/20.7**	55 650 **2I/20.8**	81 800 **2I/20.3**	111 200 **2I/20**	165 600 **2I/19.7**	219 400 **2I/20.1**	278 100 **2I/20.6**	338 100 **2I/20.6**	439 700 **2I/20.3**			
	18	–	–	–	–	–	–	–	27 950 **2I/17.6**	43 600 **2I/18.1**	58 350 **2I/18**	83 900 **2I/17.6**	117 700 **2I/18.1**	169 400 **2I/17.8**	232 100 **2I/17.9**	294 800 **2I/17.8**	367 100 **2I/17.8**	461 300 **2I/18.3**			
	16	1 240 **2I/16.3**	2 270 **2I/15.8**	2 960 **2I/16.5**	5 510 **2I/15.7**	6 490 **2I/15.7**	9 610 **2I/16.1**	18 900 **2I/15.8**	28 000 **2I/15.1**	47 000 **2I/15.7**	58 300 **2I/16.6**	86 600 **2I/16.1**	114 200 **2I/15.6**	173 700 **2I/16.2**	222 700 **2I/15.7**	304 300 **2I/15.9**	379 000 **2I/15.9**	460 800 **2I/16**			
	14	–	–	–	–	–	–	–	28 400 **2I/14.7**	46 100 **2I/14.1**	61 700 **2I/14.4**	88 950 **2I/13.9**	111 000 **2I/14.6**	188 900 **2I/14.6**	220 600 **2I/14.7**	312 600 **2I/14.3**	382 200 **2I/14.3**	486 500 **2I/14.4**			
	12.5	1 220 **2I/12.3**	2 260 **2I/13.1**	2 940 **2I/13.6**	5 170 **2I/13.7**	6 090 **2I/13.7**	9 740 **2I/12.3**	19 500 **2I/13.1**	28 850 **2I/13.3**	45 150 **2I/13.6**	60 800 **2I/13.6**	87 050 **2I/13**	121 300 **2I/12.8**	174 500 **2I/13.1**	240 100 **2I/13.3**	303 700 **2I/13.4**	370 100 **2I/13.4**	480 700 **2I/13.1**			
	11.2	–	–	–	–	–	–	–	30 300 **2I/11.9**	45 050 **2I/11.9**	64 350 **2I/11.8**	91 700 **2I/11.2**	128 400 **2I/11.5**	184 200 **2I/11.8**	253 600 **2I/11.9**	321 800 **2I/11.5**	401 100 **2I/11.5**	507 300 **2I/11.8**			
	10	1 260 **2I/10.2**	2 350 **2I/10.7**	3 040 **2I/11.2**	5 620 **2I/10.3**	6 610 **2I/10.3**	10 150 **2I/10.2**	20 300 **2I/10.7**	29 100 **2I/10.2**	47 750 **2I/10.3**	60 550 **2I/10.7**	92 950 **2I/10.2**	130 100 **2I/9.95**	186 700 **2I/10.7**	257 000 **2I/10.4**	326 200 **2I/10.3**	406 600 **2I/10.3**	514 200 **2I/10.7**			
	9	–	–	–	–	–	–	–	26 650 **2I/9.22**	46 250 **2I/9.24**	53 450 **2I/9.31**	94 100 **2I/8.85**	119 700 **2I/8.88**	189 100 **2I/9.19**	245 000 **2I/9.22**	330 300 **2I/9.24**	411 700 **2I/9.24**	491 700 **2I/9.31**			
	8	1 290 **2I/8.01**	2 410 **2I/8.26**	2 990 **2I/7.99**	5 280 **2I/8.03**	6 210 **2I/8.03**	10 400 **2I/8.01**	20 850 **2I/8.26**	–	46 750 **2I/8.03**	–	95 450 **2I/8.01**	–	191 800 **2I/8.26**	–	335 000 **2I/8.03**	417 600 **2I/8.03**	–			
	6.3	1 170 **2I/6.42**	2 200 **2I/6.53**	2 620 **2I/6.86**	4 610 **2I/6.41**	5 330 **2I/6.41**	9 580 **2I/6.42**	19 200 **2I/6.53**	–	38 450 **2I/6.41**	–	88 100 **2I/6.42**	–	176 600 **2I/6.53**	–	299 400 **2I/6.41**	353 500 **2I/6.41**	–			
	5	–	18.2 2300 **I/5**	–	37.9 4 970 **I/5.2**	–	71.3 8 660 **I/4.82**	140 17 650 **I/5**	210 26 500 **I/5**	332 41 150 **I/4.92**	399 51 050 **I/5.07**	617 76 550 **I/4.92**	766 97 900 **I/5.07**	– 123 800 **I/5.08**	– 193 600 **I/5**	– 244 700 **I/4.92**	– 305 900 **I/4.92**	– 338 200 **I/5.07**	5	2500	**500**
	4.5	–	–	–	–	–	–	142 17 850 **I/4.45**	212 26 900 **I/4.5**	331 41 850 **I/4.5**	415 54 450 **I/4.67**	615 77 850 **I/4.5**	760 99 750 **I/4.67**	– 143 000 **I/4.47**	– 174 400 **I/4.5**	– 248 100 **I/4.5**	– 310 100 **I/4.5**	– 340 700 **I/4.6**	4.5	2240	
	4	–	21.6 2720 **I/4**	–	44.2 5800 **I/4.16**	–	72 8 910 **I/3.92**	143 18 100 **I/4**	220 28 250 **I/4.08**	327 42 600 **I/4.13**	411 53 750 **I/4.15**	608 79 250 **I/4.13**	806 103 500 **I/4.07**	1 063 134 000 **I/4**	1 519 195 200 **I/4.08**	– 249 300 **I/4.07**	– 311 600 **I/4.07**	– 331 500 **I/4**	4	2000	
	3.55	–	–	–	–	–	–	173 21 950 **I/3.62**	220 28 050 **I/3.64**	313 39 600 **I/3.62**	456 57 550 **I/3.6**	624 77 950 **I/3.57**	802 103 000 **I/3.67**	1 129 142 900 **I/3.62**	1 444 184 200 **I/3.64**	1 954 239 500 **I/3.5▲**	2 443 299 400 **I/3.5▲**	2 616 329 800 **I/3.6▲**	3.55	1800	
	3.15	–	21.6 2800 **I/3.28**	–	48.7 6 020 **I/3.13**	–	91.3 11 750 **I/3.27**	172 22 250 **I/3.28**	231 28 450 **I/3.13**	345 42 550 **I/3.13**	448 57 400 **I/3.25**	615 79 150 **I/3.27**	837 104 700 **I/3.18**	1 064 137 700 **I/3.28**	1 598 200 700 **I/3.19**	1 928 237 900 **I/3.13▲**	2 409 297 400 **I/3.13▲**	2 569 329 000 **I/3.25▲**	3.15	1600	
	2.8	–	–	–	–	–	–	179 22 150 **I/2.75**	224 28 400 **I/2.82**	335 42 400 **I/2.81**	459 58 550 **I/2.83**	634 80 650 **I/2.82**	806 102 900 **I/2.83**	1 164 147 400 **I/2.81**	1 469 186 800 **I/2.82**	1 872 237 000 **I/2.81▲**	2 340 296 300 **I/2.81▲**	2 631 335 600 **I/2.83▲**	2.8	1400	
	2.5	–	22.7 2900 **I/2.53**	–	49.2 6 060 **I/2.44**	–	90.5 11 650 **I/2.55**	175 22 400 **I/2.53**	231 29 400 **I/2.53**	341 42 050 **I/2.44**	428 53 900 **I/2.5**	620 79 900 **I/2.55**	868 106 300 **I/2.43**	1 086 138 500 **I/2.53**	1 516 193 100 **I/2.53**	1 944 239 600 **I/2.44**	2 430 299 500 **I/2.44**	2 698 340 100 **I/2.5▲**	2.5	1250	

For n_1 lower than 560 rpm see page 107.
▲ Possible forced lubrication with heat exchanger: consult us.

$n_{N2} \cdot L_h$ rpm · h	i_N	50	63	64	80	81	100	125	140	160	180	200	225	250	280	320	321	360	i_N	n_1 rpm	n_{N2}
		Nominal output power P_{N2} [hp] Nominal output torque T_{N2} [lb in] Train of gears / ratio ... / i																			
6 300 000	2.24	172 22 050 I/2.28	225 29 100 I/2.3	308 38 300 I/2.21	383 48 250 I/2.24	637 78 950 I/2.2	794 101 600 I/2.27	1 064 139 700 I/2.33	1 477 191 100 I/2.3	1 899 241 900 I/2.26	2 374 302 400 I/2.26	2 622 337 300 I/2.29▲	–	–	–	–	–	–	2.24	1120	**500**
	2	146 18 450 I/2	–	275 33 850 I/1.95	–	566 73 000 I/2.05	–	1 091 137 600 I/2	–	1 938 238 400 I/1.95	2 422 298 000 I/1.95	–	–	–	–	–	–	–	2	1000	
5 600 000	31.5	–	2180 3I/33.5	2430 3I/34.9	4 550 3I/32.8	5 350 3I/32.8	9 340 3I/32.6	15 950 3I/33.5	24 650 3I/32.2	38 000 3I/31.6	51 150 3I/32.8	78 900 3I/31.5	108 500 3I/30.6	154 900 3I/33.5	214 000 3I/32.5	271 300 3I/33.5	337 600 3I/33.5	428 000 3I/34.7			
	28	–	–	–	–	–	8 000 2I/28.8	–	22 850 3I/29.1	39 000 3I/28.4	45 750 3I/28.6	79 200 3I/27.2	102 800 3I/27.3	159 000 3I/28.7	205 500 3I/28.8	278 500 3I/30	346 500 3I/30	421 800 3I/30.3			
	25	975 2I/24.4	2060 2I/24.1	2570 2I/25.1	4 370 2I/26	5 140 2I/26	9 320 2I/23.7	18 700 2I/24.1	26 500 2I/24.1	40 000 2I/24.6	54 900 2I/25.4	81 300 2I/24.2	104 200 2I/25	164 200 2I/25	206 800 2I/24.6	233 100 2I/25	329 700 2I/25	372 200 2I/25.7			
	22.4	–	–	–	–	–	–	–	28 700 2I/21.7	45 050 2I/22.5	58 850 2I/23.3	82 950 2I/22.2	106 500 2I/23	185 000 2I/22	206 800 2I/22.2	262 200 2I/22.8	335 500 2I/22.8	414 300 2I/23.4			
	20	1150 2I/20.1	2 270 2I/19.3	2 960 2I/20.1	5 180 2I/20.8	6 100 2I/20.8	9 640 2I/19.3	19 250 2I/19.3	29 100 2I/19.6	45 900 2I/20.7	57 250 2I/20.8	84 400 2I/20.3	114 300 2I/20	170 900 2I/19.7	225 600 2I/20.1	286 000 2I/20.6	347 700 2I/20.6	452 200 2I/20.3			
	18	–	–	–	–	–	–	–	28 950 2I/17.6	45 150 2I/18.1	60 450 2I/18	86 600 2I/17.6	121 500 2I/18.1	175 500 2I/17.8	239 600 2I/17.9	304 300 2I/17.8	379 000 2I/17.8	476 200 2I/18.3			
	16	1 280 2I/16.3	2 350 2I/15.8	3 070 2I/16.5	5 710 2I/15.7	6 720 2I/15.7	9 960 2I/16.1	19 400 2I/15.8	28 750 2I/15.1	48 700 2I/15.7	59 900 2I/16.6	88 950 2I/16.1	117 300 2I/15.6	178 500 2I/16.2	228 800 2I/15.7	312 600 2I/15.9	389 400 2I/15.9	473 400 2I/16			
	14	–	–	–	–	–	–	–	29 400 2I/14.7	47 800 2I/14.1	63 350 2I/14.4	91 350 2I/13.9	114 000 2I/14.6	195 800 2I/14.6	226 500 2I/14.7	320 900 2I/14.3	392 400 2I/14.3	499 400 2I/14.4			
	12.5	1 270 2I/12.3	2 340 2I/13.1	3 050 2I/13.6	5 190 2I/13.7	6 110 2I/13.7	10 000 2I/12.3	20 050 2I/13.1	29 850 2I/13.3	46 800 2I/13.6	62 500 2I/13.6	89 450 2I/13	124 600 2I/12.8	179 300 2I/13.1	246 700 2I/13.3	312 000 2I/13.4	380 200 2I/13.4	493 900 2I/13.1			
	11.2	–	–	–	–	–	–	–	30 700 2I/11.9	45 900 2I/11.9	65 250 2I/11.8	92 950 2I/11.2	130 100 2I/11.5	186 700 2I/11.8	257 000 2I/11.9	326 200 2I/11.5	406 600 2I/11.5	514 200 2I/11.8			
	10	1 300 2I/10.2	2 410 2I/10.7	3 140 2I/11.2	5 800 2I/10.3	6 820 2I/10.3	10 250 2I/10.2	20 600 2I/10.7	29 450 2I/10.2	49 300 2I/10.3	61 300 2I/10.7	94 100 2I/10.2	131 800 2I/9.95	189 100 2I/10.7	260 300 2I/10.4	330 300 2I/10.3	411 700 2I/10.3	520 800 2I/10.7			
	9	–	–	–	–	–	–	–	27 000 2I/9.22	46 900 2I/9.24	54 200 2I/9.31	95 450 2I/8.85	121 400 2I/8.88	191 800 2I/9.19	248 500 2I/9.22	335 000 2I/9.24	417 600 2I/9.24	498 700 2I/9.31			
	8	1 310 2I/8.01	2 440 2I/8.26	3 040 2I/7.99	5 470 2I/8.03	6 440 2I/8.03	10 550 2I/8.01	21 150 2I/8.26	–	47 450 2I/8.03	–	96 800 2I/8.01	–	194 500 2I/8.26	–	339 800 2I/8.03	423 600 2I/8.03	–			
	6.3	8.21 1 190 2I/6.42	15.2 2 230 2I/6.53	17.2 2 660 2I/6.86	32.5 4 690 2I/6.41	38.2 5 520 2I/6.41	68 9 820 2I/6.42	132 19 450 2I/6.53	–	270 38 950 2I/6.41	–	619 89 350 2I/6.42	–	1 218 179 100 2I/6.53▲	–	– 303 700 2I/6.41	– 358 600 2I/6.41	–	6.3	2800	**450**
	5	– 2360 I/5	16.8 2360 I/5	– 2360 I/5	34.1 4 990 I/5.2	– 4 990 I/5.2	66 8 950 I/4.82	130 18 200 I/5	195 27 400 I/5	307 42 550 I/4.92	370 52 750 I/5.07	571 79 100 I/4.92	709 101 200 I/5.07	– 128 000 I/5.08	– 200 100 I/5	– 252 900 I/4.92	– 316 100 I/4.92	– 349 500 I/5.07	5	2240	
	4.5	–	–	–	–	–	–	132 18 450 I/4.45	196 27 850 I/4.5	305 43 300 I/4.5	383 56 350 I/4.67	568 80 550 I/4.5	702 103 200 I/4.67	1 051 148 000 I/4.47	1 273 180 500 I/4.5	– 256 700 I/4.5	– 320 900 I/4.5	– 352 500 I/4.6	4.5	2000	

For n_1 lower than 560 rpm see page 107.
▲ Possible forced lubrication with heat exchanger: consult us.

$n_{N2} \cdot L_h$ rpm · h	i_N	50	63	64	80	81	100	125	140	160	180	200	225	250	280	320	321	360	i_N	n_1 rpm	n_{N2}
		Nominal output power P_{N2} [hp] Nominal output torque T_{N2} [lb in] Train of gears / ratio ... / i																			
5 600 000	4	20 2800 I/4		39.8 5800 I/4.16		66.9 9 190 I/3.92	133 18 650 I/4	204 29 150 I/4.08	304 44 000 I/4.13	381 55 500 I/4.15	565 81 800 I/4.13	749 106 800 I/4.07	988 138 300 I/4	1 411 201 400 I/4.08	1 807 257 300 I/4.07	2 259 321 600 I/4.07	2 443 342 200 I/4▲	4	1800	450
	3.55						160 22 750 I/3.62	202 29 050 I/3.64	288 41 050 I/3.62	420 59 600 I/3.6	574 80 800 I/3.57	739 106 700 I/3.67	1 039 148 000 I/3.62	1 330 190 800 I/3.64	1 800 248 100 I/3.5	2 249 310 100 I/3.5	2 409 341 700 I/3.6▲	3.55	1600	
	3.15	19.6 2900 I/3.28		42.5 6000 I/3.13		83.1 12 250 I/3.27	157 23 150 I/3.28	211 29 600 I/3.13	314 44 300 I/3.13	408 59 700 I/3.25	560 82 350 I/3.27	762 109 000 I/3.18	969 143 300 I/3.28	1 455 208 900 I/3.19	1 756 247 600 I/3.13	2 194 309 600 I/3.13	2 340 342 400 I/3.25▲	3.15	1400	
	2.8						165 22 900 I/2.75	207 29 400 I/2.82	309 43 850 I/2.81	424 60 550 I/2.83	586 83 400 I/2.82	745 106 400 I/2.83	1 076 152 500 I/2.81	1 357 193 200 I/2.82	1 729 245 200 I/2.81	2 162 306 600 I/2.81	2 430 347 200 I/2.83▲	2.8	1250	
	2.5	20.4 2900 I/2.53		45.5 6 260 I/2.44		81.1 11 650 I/2.55	162 23 150 I/2.53	214 30 350 I/2.53	306 42 050 I/2.44	383 53 900 I/2.5	574 82 600 I/2.55	790 108 000 I/2.43	1 005 143 100 I/2.53	1 403 199 500 I/2.53	1 800 247 600 I/2.44	2 250 309 600 I/2.44	2 498 351 500 I/2.5	2.5	1120	
	2.24						159 22 800 I/2.28	208 30 100 I/2.3	275 38 300 I/2.21	342 48 250 I/2.24	570 79 000 I/2.2	709 101 600 I/2.27	983 144 600 I/2.33	1 364 197 700 I/2.3	1 755 250 300 I/2.26	2 193 312 900 I/2.26	2 422 348 900 I/2.29	2.24	1000	
	2						133 18 650 I/2		247 33 850 I/1.95		509 73 000 I/2.05		1 014 142 000 I/2		1 800 246 100 I/1.95	2 250 307 600 I/1.95		2	900	
5 000 000	35.5								25 600 3I/37.5	43 150 3I/36.5	54 250 3I/36.3	86 250 3I/34.4	108 500 3I/35.4	156 300 3I/36.9	214 000 3I/37.2	271 300 3I/37.4	337 600 3I/37.4	428 000 3I/38.4			
	31.5		2240 3I/33.5	2500 3I/34.9	4 700 3I/32.8	5 530 3I/32.8	9 670 3I/32.6	16 400 3I/33.5	25 300 3I/32.2	39 000 3I/31.6	52 500 3I/32.8	81 600 3I/31.5	111 400 3I/30.6	159 000 3I/33.5	219 700 3I/32.5	278 500 3I/33.5	346 500 3I/33.5	439 300 3I/34.7			
	28						8 250 2I/28.8		23 450 3I/29.1	40 050 3I/28.4	47 050 3I/28.6	81 400 3I/27.2	105 600 3I/27.3	163 400 3I/28.7	211 100 3I/28.8	286 100 3I/30	356 000 3I/30	433 400 3I/30.3			
	25	1000 2I/24.4	2120 2I/24.1	2650 2I/25.1	4 390 2I/26	5 160 2I/26	9 640 2I/23.7	19 000 2I/24.1	27 200 2I/24.1	41 200 2I/24.6	56 750 2I/25.4	84 100 2I/24.2	107 800 2I/25	169 800 2I/25	214 000 2I/24.6	239 100 2I/25	341 200 2I/25	381 700 2I/25.7			
	22.4								29 650 2I/21.7	46 500 2I/22.5	60 750 2I/23.3	85 600 2I/22.2	109 900 2I/23	190 000 2I/22	212 700 2I/22.2	269 700 2I/22.8	346 300 2I/22.8	426 100 2I/23.4			
	20	1220 2I/20.1	2 360 2I/19.3	3 070 2I/20.1	5 200 2I/20.8	6 120 2I/20.8	9 990 2I/19.3	19 950 2I/19.3	30 150 2I/19.6	47 550 2I/20.7	59 100 2I/20.8	87 450 2I/20.3	118 100 2I/20	177 100 2I/19.7	232 900 2I/20.1	295 300 2I/20.6	359 000 2I/20.6	466 800 2I/20.3			
	18								30 000 2I/17.6	46 800 2I/18.1	62 650 2I/18	88 950 2I/17.6	124 800 2I/18.1	181 900 2I/17.8	246 100 2I/17.9	312 600 2I/17.8	389 400 2I/17.8	489 300 2I/18.3			
	16	1 330 2I/16.3	2 440 2I/15.8	3 180 2I/16.5	5 920 2I/15.7	6 970 2I/15.7	10 350 2I/16.1	19 950 2I/15.8	29 500 2I/15.1	50 450 2I/15.7	61 500 2I/16.6	91 350 2I/16.1	120 400 2I/15.6	183 200 2I/16.2	234 900 2I/15.7	320 900 2I/15.9	399 700 2I/15.9	486 000 2I/16			
	14								30 450 2I/14.7	49 500 2I/14.1	65 050 2I/14.4	93 850 2I/13.9	117 100 2I/14.6	198 400 2I/14.6	232 700 2I/14.7	329 700 2I/14.3	403 100 2I/14.3	513 100 2I/14.4			
	12.5	1 310 2I/12.3	2 420 2I/13.1	3 150 2I/13.6	5 210 2I/13.7	6 130 2I/13.7	10 150 2I/12.3	20 500 2I/13.1	30 900 2I/13.3	48 400 2I/13.6	63 350 2I/13.6	90 650 2I/13	126 300 2I/12.8	181 800 2I/13.1	250 100 2I/13.3	316 300 2I/13.4	385 400 2I/13.4	500 600 2I/13.1			
	11.2								31 100 2I/11.9	47 350 2I/11.9	66 050 2I/11.8	94 100 2I/11.2	131 800 2I/11.5	189 100 2I/11.8	260 300 2I/11.9	330 300 2I/11.5	411 700 2I/11.5	520 800 2I/11.8			

For n_1 lower than 560 rpm see page 107.
▲ Possible forced lubrication with heat exchanger: consult us.

$n_{N2} \cdot L_h$ rpm · h	i_N	50	63	64	80	81	100	125	140	160	180	200	225	250	280	320	321	360	i_N	n_1 rpm	n_{N2}
		Nominal output power P_{N2} [hp] Nominal output torque T_{N2} [lb in] Train of gears / ratio ... / i																			
5 000 000	10	1 340 2I/10.2	2 490 2I/10.7	3 250 2I/11.2	6 010 2I/10.3	7 070 2I/10.3	10 400 2I/10.2	20 950 2I/10.7	29 900 2I/10.2	51 050 2I/10.3	63 150 2I/10.7	95 450 2I/10.2	133 600 2I/9.95	191 800 2I/10.7	264 000 2I/10.4	335 000 2I/10.3	417 600 2I/10.3	528 100 2I/10.7			
	9	–	–	–	–	–	–	–	27 400 2I/9.22	47 550 2I/9.24	55 000 2I/9.31	96 800 2I/8.85	123 200 2I/8.88	194 500 2I/9.19	252 000 2I/9.22	339 800 2I/9.24	423 600 2I/9.24	505 800 2I/9.31			
	8	1 330 2I/8.01	2 480 2I/8.26	3 080 2I/7.99	5 670 2I/8.03	6 670 2I/8.03	10 700 2I/8.01	21 500 2I/8.26	–	48 100 2I/8.03	–	98 200 2I/8.01	–	197 300 2I/8.26	–	344 700 2I/8.03	429 700 2I/8.03	–			
	6.3	7.43 1 200 2I/6.42	13.7 2 260 2I/6.53	15.9 2 750 2I/6.86	30 4 850 2I/6.41	35.3 5 710 2I/6.41	62.8 10 150 2I/6.42	120 19 750 2I/6.53	–	244 39 500 2I/6.41	–	560 90 600 2I/6.42	–	1 102 181 600 2I/6.53▲	–	– 307 800 2I/6.41	– 363 400 2I/6.41	–	6.3	2500	400
	5	–	15 2360 I/5	–	30.6 5 010 I/5.2	–	61 9 260 I/4.82	120 18 850 I/5	180 28 350 I/5	284 44 000 I/4.92	341 54 600 I/5.07	527 81 850 I/4.92	655 104 700 I/5.07	828 132 400 I/5.08	1 314 207 100 I/5	– 261 600 I/4.92	– 327 000 I/4.92	– 361 600 I/5.07	5	2000	
	4.5	–	–	–	–	–	–	122 19 050 I/4.45	182 28 700 I/4.5	284 44 700 I/4.5	356 58 150 I/4.67	528 83 150 I/4.5	652 106 500 I/4.67	976 152 700 I/4.47	1 182 186 300 I/4.5	1 681 264 900 I/4.5	2 102 331 200 I/4.5	2 259 363 800 I/4.6▲	4.5	1800	
	4	–	17.8 2800 I/4	–	36.6 6000 I/4.16	–	61.6 9 520 I/3.92	123 19 350 I/4	188 30 200 I/4.08	280 45 550 I/4.13	351 57 500 I/4.15	520 84 750 I/4.13	690 110 600 I/4.07	910 143 300 I/4	1 299 208 700 I/4.08	1 664 266 600 I/4.07	2 080 333 200 I/4.07	2 249 354 500 I/4	4	1600	
	3.55	–	–	–	–	–	–	145 23 700 I/3.62	184 30 250 I/3.64	262 42 700 I/3.62	383 62 050 I/3.6	523 84 100 I/3.57	673 111 100 I/3.67	947 154 100 I/3.62	1 211 198 600 I/3.64	1 639 258 300 I/3.5	2 049 322 800 I/3.5	2 194 355 700 I/3.6	3.55	1400	
	3.15	–	17.5 2900 I/3.28	–	38.9 6150 I/3.13	–	74.1 12 200 I/3.27	145 23 950 I/3.28	194 30 650 I/3.13	290 45 800 I/3.13	377 61 800 I/3.25	517 85 200 I/3.27	704 112 700 I/3.18	895 148 300 I/3.28	1 344 216 100 I/3.19	1 622 256 200 I/3.13	2 027 320 300 I/3.13	2 162 354 200 I/3.25	3.15	1250	
	2.8	–	–	–	–	–	–	153 23 650 I/2.75	191 30 400 I/2.82	286 45 300 I/2.81	383 61 050 I/2.83	543 86 200 I/2.82	690 110 000 I/2.83	996 157 600 I/2.81	1 257 199 700 I/2.82	1 601 253 500 I/2.81	2 002 316 800 I/2.81	2 250 358 800 I/2.83	2.8	1120	
	2.5	–	18.8 3000 I/2.53	–	40.9 6300 I/2.44	–	72.4 11 650 I/2.55	150 23 900 I/2.53	197 31 400 I/2.53	273 42 050 I/2.44	342 53 900 I/2.5	530 85 450 I/2.55	705 108 000 I/2.43	929 148 100 I/2.53	1 296 206 400 I/2.53	1 663 256 200 I/2.44	2 079 320 300 I/2.44	2 308 363 600 I/2.5	2.5	1000	
	2.24	–	–	–	–	–	–	148 23 550 I/2.28	193 31 050 I/2.3	247 38 300 I/2.21	308 48 250 I/2.24	513 79 000 I/2.2	638 101 600 I/2.27	913 149 200 I/2.33	1 267 204 100 I/2.3	1 630 258 300 I/2.26	2 037 322 900 I/2.26	2 250 360 100 I/2.29	2.24	900	
	2	–	–	–	–	–	–	120 18 900 I/2	–	220 33 850 I/1.95	–	452 73 000 I/2.05	–	933 147 100 I/2	–	1 657 254 900 I/1.95	2 039 313 600 I/1.95	–	2	800	
4 500 000	40	–	2300 3I/40.8	2800 3I/42.5	4870 3I/43.6	5600 3I/43.6	10 300 3I/39.1	18 000 3I/40.8	25 550 3I/38.7	45 500 3I/38.5	52 450 3I/39.9	95 000 3I/41.5	110 800 3I/40.4	159 600 3I/42.4	214 000 3I/41.2	271 300 3I/40.7	337 600 3I/40.7	428 000 3I/42.3			
	35.5	–	–	–	–	–	–	–	26 300 3I/37.5	44 650 3I/36.5	55 700 3I/36.3	89 250 3I/34.4	111 400 3I/35.4	161 800 3I/36.9	219 700 3I/37.2	278 500 3I/37.4	346 500 3I/37.4	439 300 3I/38.4			
	31.5	–	2300 3I/33.5	2570 3I/34.9	4 860 3I/32.8	5 720 3I/32.8	9 990 3I/32.6	16 850 3I/33.5	25 950 3I/32.2	40 050 3I/31.6	53 950 3I/32.8	84 350 3I/31.5	114 400 3I/30.6	163 400 3I/33.5	225 700 3I/32.5	286 100 3I/33.5	356 000 3I/33.5	451 400 3I/34.7			
	28	–	–	–	–	–	8 500 2I/28.8	–	24 050 3I/29.1	41 050 3I/28.4	48 250 3I/28.6	83 450 3I/27.2	108 300 3I/27.3	167 500 3I/28.7	216 500 3I/28.8	293 400 3I/30	365 100 3I/30	444 400 3I/30.3			
	25	1030 2I/24.4	2180 2I/24.1	2720 2I/25.1	4 400 2I/26	5 180 2I/26	9 950 2I/23.7	19 500 2I/24.1	28 000 2I/24.1	42 500 2I/24.6	58 600 2I/25.4	86 800 2I/24.2	111 200 2I/25	175 300 2I/25	220 800 2I/24.6	245 900 2I/25	352 100 2I/25	392 500 2I/25.7			

For n_1 lower than 560 rpm see page 107.
▲ Possible forced lubrication with heat exchanger: consult us.

$n_{N2} \cdot L_h$ rpm · h	i_N	Nominal output power P_{N2} [hp] / Nominal output torque T_{N2} [lb in] / Train of gears / ratio … / i																		i_N	n_1 rpm	n_{N2}
		50	63	64	80	81	100	125	140	160	180	200	225	250	280	320	321	360			
4 500 000	22.4	–	–	–	–	–	–	–	30 700 2I/21.7	48 200 2I/22.5	62 950 2I/23.3	88 700 2I/22.2	113 800 2I/23	198 700 2I/22	219 600 2I/22.2	278 400 2I/22.8	358 700 2I/22.8	439 900 2I/23.4				
	20	1 250 2I/20.1	2 440 2I/19.3	3 180 2I/20.1	5 220 2I/20.8	6 150 2I/20.8	10 350 2I/19.3	20 700 2I/19.3	31 250 2I/19.6	49 250 2I/20.7	60 700 2I/20.8	90 650 2I/20.3	121 300 2I/20	183 500 2I/19.7	239 300 2I/20.1	303 400 2I/20.6	368 800 2I/20.6	479 600 2I/20.3				
	18	–	–	–	–	–	–	–	31 100 2I/17.6	48 500 2I/18.1	64 950 2I/18	91 350 2I/17.6	128 200 2I/18.1	188 500 2I/17.8	252 700 2I/17.9	320 900 2I/17.8	399 700 2I/17.8	502 300 2I/18.3				
	16	1 380 2I/16.3	2 520 2I/15.8	3 290 2I/16.5	6 130 2I/15.7	7 220 2I/15.7	10 700 2I/16.1	20 500 2I/15.8	30 300 2I/15.1	52 300 2I/15.7	63 200 2I/16.6	93 850 2I/16.1	123 700 2I/15.6	188 300 2I/16.2	241 300 2I/15.7	329 700 2I/15.9	410 700 2I/15.9	499 300 2I/16				
	14	–	–	–	–	–	–	–	31 550 2I/14.7	51 250 2I/14.1	65 950 2I/14.4	95 100 2I/13.9	118 700 2I/14.6	199 100 2I/14.6	235 800 2I/14.7	334 200 2I/14.3	408 600 2I/14.3	520 100 2I/14.4				
	12.5	1 350 2I/12.3	2 500 2I/13.1	3 200 2I/13.6	5 230 2I/13.7	6 150 2I/13.7	10 250 2I/12.3	21 150 2I/13.1	31 900 2I/13.3	49 950 2I/13.6	64 150 2I/13.6	91 800 2I/13	127 900 2I/12.8	187 600 2I/13.1	253 200 2I/13.3	320 300 2I/13.4	390 300 2I/13.4	507 000 2I/13.1				
	11.2	–	–	–	–	–	–	–	31 650 2I/11.9	49 050 2I/11.9	67 000 2I/11.8	95 450 2I/11.2	133 600 2I/11.5	191 800 2I/11.8	264 000 2I/11.9	335 000 2I/11.5	417 600 2I/11.5	528 100 2I/11.8				
	10	1 390 2I/10.2	2 580 2I/10.7	3 370 2I/11.2	6 220 2I/10.3	7 320 2I/10.3	10 550 2I/10.2	21 700 2I/10.7	30 300 2I/10.2	52 900 2I/10.3	65 500 2I/10.7	96 800 2I/10.2	135 500 2I/9.95	194 500 2I/10.7	267 800 2I/10.4	339 800 2I/10.3	423 600 2I/10.3	535 700 2I/10.7				
	9	–	–	–	–	–	–	–	27 800 2I/9.22	48 250 2I/9.24	55 750 2I/9.31	98 200 2I/8.85	124 900 2I/8.88	197 300 2I/9.19	255 700 2I/9.22	344 700 2I/9.24	429 700 2I/9.24	513 100 2I/9.31				
	8	7.48 1 350 2I/8.01	13.8 2 560 2I/8.26	17.4 3 120 2I/7.99	32.5 5 870 2I/8.03	38.2 6 910 2I/8.03	60.3 10 850 2I/8.01	117 21 800 2I/8.26	– –	270 48 800 2I/8.03	– –	553 99 600 2I/8.01	– –	1 076 200 100 2I/8.26▲	– –	– 349 500 2I/8.03	– 435 700 2I/8.03	– –	8	2800	**355**
	6.3	6.75 1 220 2I/6.42	12.5 2 290 2I/6.53	14.7 2 840 2I/6.86	27.8 5 020 2I/6.41	32.7 5 900 2I/6.41	58.2 10 500 2I/6.42	109 20 000 2I/6.53	– –	222 40 050 2I/6.41	– –	508 91 800 2I/6.42	– –	1 001 184 000 2I/6.53	– –	– 311 900 2I/6.41	– 368 200 2I/6.41	– –	6.3	2240		
	5	– –	13.9 2430 I/5	– –	27.6 5 030 I/5.2	– –	56.6 9 560 I/4.82	111 19 450 I/5	167 29 250 I/5	263 45 400 I/4.92	317 56 350 I/5.07	490 84 450 I/4.92	608 108 000 I/5.07	769 136 700 I/5.08	1 221 213 700 I/5	1 566 270 000 I/4.92	1 958 337 600 I/4.92	2 102 373 200 I/5.07	5	1800		
	4.5	–	–	–	–	–	–	113 19 750 I/4.45	168 29 750 I/4.5	261 46 300 I/4.5	328 60 250 I/4.67	486 86 100 I/4.5	600 110 300 I/4.67	899 158 200 I/4.47	1 089 193 000 I/4.5	1 548 274 500 I/4.5	1 935 343 100 I/4.5	2 080 376 900 I/4.6	4.5	1600		
	4	– –	16.1 2900 I/4	– –	32.8 6 150 I/4.16	– –	56.1 9 910 I/3.92	112 20 150 I/4	171 31 450 I/4.08	255 47 400 I/4.13	320 59 850 I/4.15	474 88 200 I/4.13	628 115 100 I/4.07	828 149 200 I/4	1 183 217 200 I/4.08	1 515 277 500 I/4.07	1 894 346 800 I/4.07	2 049 368 900 I/4	4	1400		
	3.55	–	–	–	–	–	–	134 24 500 I/3.62	170 31 300 I/3.64	242 44 200 I/3.62	354 64 200 I/3.6	483 87 000 I/3.57	622 114 900 I/3.67	874 159 400 I/3.62	1 119 205 500 I/3.64	1 514 267 200 I/3.5	1 892 334 000 I/3.5	2 027 368 000 I/3.6	3.55	1250		
	3.15	– –	15.7 2900 I/3.28	– –	34.9 6150 I/3.13	– –	68.7 12 650 I/3.27	134 24 750 I/3.28	180 31 650 I/3.13	269 47 350 I/3.13	349 63 850 I/3.25	479 88 100 I/3.27	652 116 500 I/3.18	829 153 200 I/3.28	1 245 223 300 I/3.19	1 502 264 800 I/3.13	1 877 331 000 I/3.13	2 002 366 100 I/3.25	3.15	1120		
	2.8	–	–	–	–	–	–	141 24 500 I/2.75	177 31 450 I/2.82	264 46 900 I/2.81	342 61 050 I/2.83	501 89 200 I/2.82	637 113 800 I/2.83	920 163 100 I/2.81	1 161 206 600 I/2.82	1 479 262 200 I/2.81	1 849 327 800 I/2.81	2 079 371 200 I/2.83	2.8	1000		
	2.5	– –	16.9 3000 I/2.53	– –	36.8 6300 I/2.44	– –	65.2 11 650 I/2.55	139 24 700 I/2.53	183 32 400 I/2.53	246 42 050 I/2.44	308 53 900 I/2.5	493 88 200 I/2.55	635 108 000 I/2.43	863 152 800 I/2.53	1 204 213 100 I/2.53	1 545 264 400 I/2.44	1 931 330 500 I/2.44	2 144 375 300 I/2.5	2.5	900		

For n_1 lower than 560 rpm see page 107.
▲ Possible forced lubrication with heat exchanger: consult us.

$n_{N2} \cdot L_h$ rpm · h	i_N	Nominal output power P_{N2} [hp] / Nominal output torque T_{N2} [lb in] / Train of gears / ratio ... / i																	i_N	n_1 rpm	n_{N2}
		50	63	64	80	81	100	125	140	160	180	200	225	250	280	320	321	360			
4 500 000	2.24	136 24 400 I/2.28	– –	– –	– –	– –	– –	136 24 400 I/2.28	178 32 150 I/2.3	220 38 300 I/2.21	274 48 250 I/2.24	456 79 000 I/2.2	567 101 600 I/2.27	841 154 600 I/2.33	1 167 211 400 I/2.3	1 501 267 600 I/2.26	1 876 334 500 I/2.26	2 072 373 100 I/2.29	2.24	800	**355**
	2	108 19 150 I/2	– –	– –	– –	– –	– –	108 19 150 I/2	–	195 33 850 I/1.95	–	402 73 000 I/2.05	–	859 152 400 I/2	–	1 525 264 200 I/1.95	1 809 313 600 I/1.95	–	2	710	
4 000 000	45	–	–	–	–	–	–	–	29 800 3I/45.1	46 200 3I/44.4	58 100 3I/44.2	95 000 3I/45.4	127 900 3I/46.6	175 600 3I/46.7	214 000 3I/47.1	271 300 3I/45.5	337 600 3I/45.5	428 000 3I/46.8			
	40	–	2360 3I/40.8	2900 3I/42.5	5000 3I/43.6	5800 3I/43.6	10 600 3I/39.1	18 650 3I/40.8	26 450 3I/38.7	47 100 3I/38.5	54 250 3I/39.9	97 500 3I/41.5	114 600 3I/40.4	165 100 3I/42.4	219 700 3I/41.2	278 500 3I/40.7	346 500 3I/40.7	439 300 3I/42.3			
	35.5	–	–	–	–	–	–	–	27 000 3I/37.5	46 100 3I/36.5	57 200 3I/36.3	92 200 3I/34.4	114 400 3I/35.4	167 200 3I/36.9	225 700 3I/37.2	286 100 3I/37.4	356 000 3I/37.4	451 400 3I/38.4			
	31.5	–	2360 3I/33.5	2650 3I/34.9	5 030 3I/32.8	5 920 3I/32.8	10 350 3I/32.6	17 300 3I/33.5	26 650 3I/32.2	41 350 3I/31.6	55 300 3I/32.8	87 250 3I/31.5	117 300 3I/30.6	167 500 3I/33.5	231 400 3I/32.5	293 400 3I/33.5	365 100 3I/33.5	462 900 3I/34.7			
	28	–	–	–	–	–	8 750 2I/28.8	–	24 750 3I/29.1	42 250 3I/28.4	49 600 3I/28.6	85 850 3I/27.2	111 400 3I/27.3	172 300 3I/28.7	222 600 3I/28.8	301 700 3I/30	375 500 3I/30	457 100 3I/30.3			
	25	1 080 2I/24.4	2240 2I/24.1	2800 2I/25.1	4 420 2I/26	5 200 2I/26	10 000 2I/23.7	20 000 2I/24.1	29 000 2I/24.1	43 700 2I/24.6	60 700 2I/25.4	89 900 2I/24.2	115 200 2I/25	181 600 2I/25	228 800 2I/24.6	253 800 2I/25	364 800 2I/25	405 300 2I/25.7			
	22.4	–	–	–	–	–	–	–	31 800 2I/21.7	49 950 2I/22.5	65 200 2I/23.3	91 900 2I/22.2	118 000 2I/23	199 500 2I/22	225 600 2I/22.2	286 100 2I/22.8	371 800 2I/22.8	451 900 2I/23.4			
	20	1 260 2I/20.1	2 530 2I/19.3	3 200 2I/20.1	5 240 2I/20.8	6 170 2I/20.8	10 750 2I/19.3	21 450 2I/19.3	32 350 2I/19.6	51 050 2I/20.7	62 300 2I/20.8	93 950 2I/20.3	124 500 2I/20	190 200 2I/19.7	245 700 2I/20.1	311 400 2I/20.6	378 600 2I/20.6	492 400 2I/20.3			
	18	–	–	–	–	–	–	–	32 200 2I/17.6	50 250 2I/18.1	67 300 2I/18	93 850 2I/17.6	131 700 2I/18.1	195 300 2I/17.8	259 600 2I/17.9	329 700 2I/17.8	410 700 2I/17.8	516 000 2I/18.3			
	16	1 420 2I/16.3	2 610 2I/15.8	3 410 2I/16.5	6 200 2I/15.7	7 330 2I/15.7	11 050 2I/16.1	20 850 2I/15.8	30 750 2I/15.1	54 100 2I/15.7	64 050 2I/16.6	95 100 2I/16.1	125 400 2I/15.6	190 800 2I/16.2	244 600 2I/15.7	334 200 2I/15.9	416 300 2I/15.9	506 100 2I/16			
	14	–	–	–	–	–	–	–	32 550 2I/14.7	52 900 2I/14.1	67 250 2I/14.4	96 300 2I/13.9	120 200 2I/14.6	199 800 2I/14.6	238 800 2I/14.7	338 500 2I/14.3	413 800 2I/14.3	526 700 2I/14.4			
	12.5	1 400 2I/12.3	2 590 2I/13.1	3 210 2I/13.6	5 250 2I/13.7	6 180 2I/13.7	10 600 2I/12.3	21 950 2I/13.1	33 050 2I/13.3	51 750 2I/13.6	65 050 2I/13.6	93 100 2I/13	129 700 2I/12.8	194 400 2I/13.1	256 800 2I/13.3	324 800 2I/13.4	395 800 2I/13.4	514 200 2I/13.1			
	11.2	–	–	–	–	–	–	–	32 800 2I/11.9	50 850 2I/11.9	68 100 2I/11.8	96 800 2I/11.2	135 500 2I/11.5	196 900 2I/11.8	267 800 2I/11.9	339 800 2I/11.5	423 600 2I/11.5	535 700 2I/11.8			
	10	1 440 2I/10.2	2 680 2I/10.7	3 490 2I/11.2	6 240 2I/10.3	7 340 2I/10.3	10 950 2I/10.2	22 500 2I/10.7	30 750 2I/10.2	54 850 2I/10.3	67 850 2I/10.7	98 200 2I/10.2	137 500 2I/9.95	197 300 2I/10.7	271 600 2I/10.4	344 700 2I/10.3	429 700 2I/10.3	543 400 2I/10.7			
	9	–	–	–	–	–	–	–	136 28 200 2I/9.22	235 48 950 2I/9.24	270 56 550 2I/9.31	500 99 600 2I/8.85	634 126 700 2I/8.88	967 200 100 2I/9.19▲	1 249 259 300 2I/9.22▲	– 349 500 2I/9.24	– 435 700 2I/9.24	– 520 300 2I/9.31	9	2800	**315**
	8	6.77 1 370 2I/8.01	12.7 2 650 2I/8.26	15.9 3 200 2I/7.99	30 6 080 2I/8.03	35.3 7 150 2I/8.03	54.6 11 000 2I/8.01	107 22 400 2I/8.26	–	244 49 450 2I/8.03	–	500 101 000 2I/8.01	–	974 202 800 2I/8.26▲	–	– 354 300 2I/8.03	– 441 700 2I/8.03	–	8	2500	

For n_1 lower than 560 rpm see page 107.
▲ Possible forced lubrication with heat exchanger: consult us.

$n_{N2} \cdot L_h$ rpm · h	i_N	50	63	64	80	81	100	125	140	160	180	200	225	250	280	320	321	360	i_N	n_1 rpm	n_{N2}
		Nominal output power P_{N2} [hp] Nominal output torque T_{N2} [lb in] Train of gears / ratio ... / i																			
4 000 000	6.3	6.11 1 230 2I/6.42	11.3 2 320 2I/6.53	13.6 2 940 2I/6.86	25.7 5 190 2I/6.41	30.2 6 110 2I/6.41	53.7 10 850 2I/6.42	98.5 20 250 2I/6.53	–	201 40 550 2I/6.41	–	460 93 050 2I/6.42	–	906 186 500 2I/6.53	–	1 564 316 100 2I/6.41 ▲	1 846 373 300 2I/6.41 ▲	–	6.3	2000	**315**
	5	–	12.3 2430 I/5	–	24.6 5 050 I/5.2	–	52.2 9 900 I/4.82	102 20 150 I/5	153 30 100 I/5	232 45 000 I/4.92	292 58 350 I/5.07	451 87 500 I/4.92	560 111 900 I/5.07	708 141 600 I/5.08	1 124 221 400 I/5	1 442 279 800 I/4.92	1 803 349 700 I/4.92	1 935 386 600 I/5.07	5	1600	
	4.5	–	–	–	–	–	–	102 20 550 I/4.45	153 30 950 I/4.5	238 48 200 I/4.5	298 62 700 I/4.67	442 89 650 I/4.5	547 114 900 I/4.67	819 164 700 I/4.47	991 200 900 I/4.5	1 410 285 700 I/4.5	1 763 357 100 I/4.5	1 894 392 300 I/4.6	4.5	1400	
	4	–	14.4 2900 I/4	–	29.4 6 170 I/4.16	–	51.8 10 250 I/3.92	103 20 850 I/4	158 32 500 I/4.08	235 49 050 I/4.13	296 61 900 I/4.15	438 91 250 I/4.13	580 119 100 I/4.07	765 154 300 I/4	1 093 224 700 I/4.08	1 400 287 100 I/4.07	1 750 358 800 I/4.07	1 892 381 700 I/4	4	1250	
	3.55	–	–	–	–	–	–	124 25 300 I/3.62	158 32 300 I/3.64	224 45 650 I/3.62	327 66 350 I/3.6	447 89 900 I/3.57	576 118 800 I/3.67	810 164 800 I/3.62	1 036 212 400 I/3.64	1 402 276 100 I/3.5	1 752 345 200 I/3.5	1 877 380 300 I/3.6	3.55	1120	
	3.15	–	14.5 3000 I/3.28	–	31.9 6300 I/3.13	–	61.4 12 650 I/3.27	124 25 600 I/3.28	166 32 750 I/3.13	248 49 000 I/3.13	323 66 050 I/3.25	443 91 100 I/3.27	602 120 500 I/3.18	766 158 500 I/3.28	1 150 231 000 I/3.19	1 387 273 900 I/3.13	1 734 342 400 I/3.13	1 849 378 800 I/3.25	3.15	1000	
	2.8	–	–	–	–	–	–	131 25 300 I/2.75	164 32 450 I/2.82	245 48 250 I/2.81	308 61 050 I/2.83	466 92 050 I/2.82	592 117 500 I/2.83	855 168 300 I/2.81	1 078 213 200 I/2.82	1 374 270 600 I/2.81	1 718 338 300 I/2.81	1 931 383 100 I/2.83	2.8	900	
	2.5	–	15.1 3000 I/2.53	–	32.7 6300 I/2.44	–	57.9 11 650 I/2.55	128 25 600 I/2.53	169 33 600 I/2.53	218 42 050 I/2.44	274 53 900 I/2.5	447 90 000 I/2.55	564 108 000 I/2.43	794 158 300 I/2.53	1 109 220 700 I/2.53	1 422 273 900 I/2.44	1 778 342 400 I/2.44	1 974 388 800 I/2.5	2.5	800	
	2.24	–	–	–	–	–	–	125 25 250 I/2.28	158 32 300 I/2.3	195 38 300 I/2.21	243 48 250 I/2.24	404 79 000 I/2.2	503 101 600 I/2.27	773 160 200 I/2.33	1 073 219 100 I/2.3	1 381 277 400 I/2.26	1 726 346 700 I/2.26	1 906 386 700 I/2.29	2.24	710	
	2	–	–	–	–	–	–	97.1 19 400 I/2	–	173 33 850 I/1.95	–	356 73 000 I/2.05	–	774 154 900 I/2	–	1 357 265 000 I/1.95	1 606 313 600 I/1.95	–	2	630	
3 550 000	50	–	2300 3I/49.4	2900 3I/51.5	4870 3I/49.8	5800 3I/49.8	10 300 3I/51.2	19 050 3I/49.5	30 000 3I/50.4	45 000 3I/50.8	65 000 3I/51	92 500 3I/52.6	128 000 3I/51.8	185 000 3I/51.7	208 000 3I/52.7	283 700 3I/52.9	354 600 3I/52.9	415 900 3I/52			
	45	–	–	–	–	–	–	–	30 800 3I/45.1	47 500 3I/44.4	60 100 3I/44.2	97 500 3I/45.4	132 300 3I/46.6	181 700 3I/46.7	219 700 3I/47.1	278 500 3I/45.5	346 500 3I/45.5	439 300 3I/46.8			
	40	–	2430 3I/40.8	3000 3I/42.5	5 270 3I/43.6	6000 3I/43.6	10 900 3I/39.1	19 250 3I/40.8	27 300 3I/38.7	48 650 3I/38.5	56 100 3I/39.9	100 000 3I/41.5	118 400 3I/40.4	170 700 3I/42.4	225 700 3I/41.2	286 100 3I/40.7	356 000 3I/40.7	451 400 3I/42.3			
	35.5	–	–	–	–	–	–	–	27 700 3I/37.5	47 700 3I/36.5	58 650 3I/36.3	95 400 3I/34.4	117 300 3I/35.4	173 000 3I/36.9	231 400 3I/37.2	293 400 3I/37.4	365 100 3I/37.4	462 900 3I/38.4			
	31.5	–	2430 3I/33.5	2720 3I/34.9	5 190 3I/32.8	6 110 3I/32.8	10 650 3I/32.6	17 750 3I/33.5	27 400 3I/32.2	42 700 3I/31.6	56 900 3I/32.8	90 050 3I/31.5	120 700 3I/30.6	172 300 3I/33.5	238 000 3I/32.5	301 700 3I/33.5	375 500 3I/33.5	476 100 3I/34.7			
	28	–	–	–	–	–	9 000 2I/28.8	–	25 550 3I/29.1	43 600 3I/28.4	51 200 3I/28.6	88 600 3I/27.2	115 000 3I/27.3	177 900 3I/28.7	229 800 3I/28.8	311 500 3I/30	387 600 3I/30	471 900 3I/30.3			
	25	1 080 2I/24.4	2300 2I/24.1	2900 2I/25.1	4 440 2I/26	5 220 2I/26	10 300 2I/23.7	20 600 2I/24.1	30 200 2I/24.1	45 000 2I/24.6	62 900 2I/25.4	93 200 2I/24.2	119 400 2I/25	188 200 2I/25	237 100 2I/24.6	260 800 2I/25	378 100 2I/25	419 000 2I/25.7			
	22.4	–	–	–	–	–	–	–	32 950 2I/21.7	50 000 2I/22.5	67 600 2I/23.3	95 250 2I/22.2	122 300 2I/23	200 200 2I/22	231 600 2I/22.2	293 600 2I/22.8	385 400 2I/22.8	463 900 2I/23.4			

For n_1 lower than 560 rpm see page 107.
▲ Possible forced lubrication with heat exchanger: consult us.

$n_{N2} \cdot L_h$ rpm · h	i_N	Nominal output power P_{N2} [hp] / Nominal output torque T_{N2} [lb in] / Train of gears / ratio ... / i																	i_N	n_1 rpm	n_{N2}
		50	63	64	80	81	100	125	140	160	180	200	225	250	280	320	321	360			
3 550 000	20	1 260 2I/20.1	2 620 2I/19.3	3 210 2I/20.1	5 260 2I/20.8	6 190 2I/20.8	11 100 2I/19.3	22 200 2I/19.3	33 550 2I/19.6	52 900 2I/20.7	64 550 2I/20.8	97 300 2I/20.3	127 900 2I/20	197 100 2I/19.7	252 400 2I/20.1	320 000 2I/20.6	389 000 2I/20.6	505 800 2I/20.3			
	18	–	–	–	–	–	–	–	33 350 2I/17.6	52 000 2I/18.1	69 600 2I/18	96 250 2I/17.6	133 500 2I/18.1	202 000 2I/17.8	263 100 2I/17.9	334 200 2I/17.8	416 300 2I/17.8	523 000 2I/18.3			
	16	1 470 2I/16.3	2 700 2I/15.8	3 520 2I/16.5	6 220 2I/15.7	7 360 2I/15.7	11 400 2I/16.1	21 500 2I/15.8	31 100 2I/15.1	55 850 2I/15.7	64 850 2I/16.6	97 200 2I/16.1	127 000 2I/15.6	193 200 2I/16.2	247 700 2I/15.7	338 500 2I/15.9	421 500 2I/15.9	512 500 2I/16			
	14	–	–	–	–	–	–	–	33 700 2I/14.7	54 800 2I/14.1	69 650 2I/14.4	98 250 2I/13.9	121 900 2I/14.6	200 500 2I/14.6	242 200 2I/14.7	343 200 2I/14.3	419 700 2I/14.3	534 100 2I/14.4			
	12.5	1 450 2I/12.3	2 680 2I/13.1	3 220 2I/13.6	5 270 2I/13.7	6 200 2I/13.7	11 000 2I/12.3	22 750 2I/13.1	34 250 2I/13.3	53 650 2I/13.6	65 950 2I/13.6	96 300 2I/13	131 600 2I/12.8	201 500 2I/13.1	260 500 2I/13.3	329 500 2I/13.4	401 500 2I/13.4	521 500 2I/13.1			
	11.2	–	–	–	–	–	–	–	34 000 2I/11.9	52 700 2I/11.9	70 600 2I/11.8	98 200 2I/11.2	137 500 2I/11.5	204 100 2I/11.8	271 600 2I/11.9	344 700 2I/11.5	429 700 2I/11.5	543 400 2I/11.8			
	10	6.49 1 500 2I/10.2	11.5 2 770 2I/10.7	14.4 3 620 2I/11.2	27 6 260 2I/10.3	31.8 7 370 2I/10.3	49.2 11 350 2I/10.2	96.5 23 300 2I/10.7	136 31 200 2I/10.2	245 56 800 2I/10.3	292 70 300 2I/10.7	432 99 600 2I/10.2	622 139 400 2I/9.95	828 200 100 2I/10.7▲	1 175 275 500 2I/10.4▲	– 349 500 2I/10.3	– 435 700 2I/10.3	– 551 100 2I/10.7	10	2800	**280**
	9	–	–	–	–	–	–	–	123 28 550 2I/9.22	213 49 600 2I/9.24	244 57 350 2I/9.31	453 101 000 2I/8.85	574 128 400 2I/8.88	876 202 800 2I/9.19▲	1 130 262 800 2I/9.22▲	– 354 300 2I/9.24	– 441 700 2I/9.24	– 527 400 2I/9.31	9	2500	
	8	6.15 1 390 2I/8.01	11.8 2 740 2I/8.26	14.7 3 310 2I/7.99	27.8 6 280 2I/8.03	32.7 7 390 2I/8.03	50.2 11 300 2I/8.01	99.5 23 150 2I/8.26	–	222 50 100 2I/8.03	–	454 102 300 2I/8.01	–	884 205 500 2I/8.26	–	– 359 000 2I/8.03	– 447 500 2I/8.03	–	8	2240	
	6.3	5.57 1 250 2I/6.42	10.3 2 350 2I/6.53	12.6 3 030 2I/6.86	23.6 5 310 2I/6.41	28.1 6 300 2I/6.41	49.9 11 200 2I/6.42	89.7 20 550 2I/6.53	–	183 41 100 2I/6.41	–	419 94 200 2I/6.42	–	825 188 800 2I/6.53	–	1 425 320 100 2I/6.41	1 683 378 000 2I/6.41	–	6.3	1800	
	5	–	11.1 2500 I/5	–	21.6 5 070 I/5.2	–	47.5 10 300 I/4.82	93.2 21 000 I/5	134 30 250 I/5	208 46 200 I/4.92	266 60 750 I/5.07	411 91 100 I/4.92	510 116 500 I/5.07	645 147 400 I/5.08	1 024 230 400 I/5	1 314 291 200 I/4.92	1 642 364 000 I/4.92	1 763 402 400 I/5.07	5	1400	
	4.5	–	–	–	–	–	–	94.7 21 250 I/4.45	141 32 050 I/4.5	220 49 850 I/4.5	276 64 850 I/4.67	409 92 750 I/4.5	505 118 800 I/4.67	756 170 400 I/4.47	916 207 800 I/4.5	1 303 295 600 I/4.5	1 628 369 500 I/4.5	1 750 405 900 I/4.6	4.5	1250	
	4	–	12.9 2900 I/4	–	26.4 6 190 I/4.16	–	48 10 600 I/3.92	95.6 21 500 I/4	146 33 600 I/4.08	218 50 700 I/4.13	274 63 950 I/4.15	405 94 300 I/4.13	537 123 100 I/4.07	709 159 500 I/4	1 012 232 200 I/4.08	1 296 296 700 I/4.07	1 620 370 800 I/4.07	1 752 394 500 I/4	4	1120	
	3.55	–	–	–	–	–	–	110 25 000 I/3.62	146 33 450 I/3.64	207 47 250 I/3.62	302 68 650 I/3.6	413 93 000 I/3.57	532 122 900 I/3.67	748 170 500 I/3.62	957 219 700 I/3.64	1 295 285 700 I/3.5	1 619 357 100 I/3.5	1 734 393 400 I/3.6	3.55	1000	
	3.15	–	13 3000 I/3.28	–	28.7 6300 I/3.13	–	55.2 12 650 I/3.27	112 25 700 I/3.28	155 33 800 I/3.13	230 50 550 I/3.13	300 68 200 I/3.25	411 94 050 I/3.27	559 124 400 I/3.18	711 163 600 I/3.28	1 068 238 500 I/3.19	1 289 282 700 I/3.13	1 611 353 400 I/3.13	1 718 390 900 I/3.25	3.15	900	
	2.8	–	–	–	–	–	–	121 26 200 I/2.75	151 33 600 I/2.82	218 48 250 I/2.81	274 61 050 I/2.83	429 95 350 I/2.82	545 121 700 I/2.83	787 174 400 I/2.81	993 220 900 I/2.82	1 265 280 400 I/2.81	1 582 350 500 I/2.81	1 778 396 900 I/2.83	2.8	800	
	2.5	–	13.7 3070 I/2.53	–	30.2 6 550 I/2.44	–	51.4 11 650 I/2.55	118 26 500 I/2.53	155 34 800 I/2.53	194 42 050 I/2.44	243 53 900 I/2.5	397 90 000 I/2.55	501 108 000 I/2.43	731 164 100 I/2.53	1 020 228 800 I/2.53	1 308 283 900 I/2.44	1 636 354 900 I/2.44	1 816 403 000 I/2.5	2.5	710	
	2.24	–	–	–	–	–	–	113 25 650 I/2.28	140 32 300 I/2.3	173 38 300 I/2.21	215 48 250 I/2.24	359 79 000 I/2.2	447 101 600 I/2.27	711 166 100 I/2.33	962 221 300 I/2.3	1 270 287 500 I/2.26	1 587 359 400 I/2.26	1 753 400 800 I/2.29	2.24	630	

For n_1 lower than 560 rpm see page 107.
▲ Possible forced lubrication with heat exchanger: consult us.

$n_{N2} \cdot L_h$ rpm · h	i_N	50	63	64	80	81	100	125	140	160	180	200	225	250	280	320	321	360	i_N	n_1 rpm	n_{N2}
		Nominal output power P_{N2} [hp]																			
		Nominal output torque T_{N2} [lb in]																			
		Train of gears / ratio ... / i																			
3 550 000								87.4		154		317		688		1 206	1 427		2	560	**280**
	2	–	–	–	–	–	–	19 700 **I/2**	–	33 850 **I/1.95**	–	73 000 **I/2.05**	–	154 900 **I/2**	–	265 000 **I/1.95**	313 600 **I/1.95**	–			
3 150 000	56	–	–	–	–	–	–	–	30 700 **3I/55.4**	46 200 **3I/55.5**	63 000 **3I/55.3**	95 000 **3I/54.1**	131 200 **3I/55.5**	187 900 **3I/55.6**	214 000 **3I/56**	271 300 **3I/57.8**	337 600 **3I/57.8**	428 000 **3I/59.4**			
	50	–	2360 **3I/49.4**	3000 **3I/51.5**	5000 **3I/49.8**	6000 **3I/49.8**	10 600 **3I/51.2**	19 700 **3I/49.5**	31 500 **3I/50.4**	46 200 **3I/50.8**	67 000 **3I/51**	95 000 **3I/52.6**	132 000 **3I/51.8**	190 000 **3I/51.7**	213 500 **3I/52.7**	293 500 **3I/52.9**	366 900 **3I/52.9**	427 000 **3I/52**			
	45	–	–	–	–	–	–	–	31 850 **3I/45.1**	48 700 **3I/44.4**	62 100 **3I/44.2**	100 000 **3I/45.4**	136 700 **3I/46.6**	187 800 **3I/46.7**	225 700 **3I/47.1**	286 100 **3I/45.5**	356 000 **3I/45.5**	451 400 **3I/46.8**			
	40	–	2500 **3I/40.8**	3070 **3I/42.5**	5 290 **3I/43.6**	6 220 **3I/43.6**	11 200 **3I/39.1**	19 900 **3I/40.8**	28 250 **3I/38.7**	50 350 **3I/38.5**	58 000 **3I/39.9**	103 000 **3I/41.5**	122 500 **3I/40.4**	176 600 **3I/42.4**	231 400 **3I/41.2**	293 400 **3I/40.7**	365 100 **3I/40.7**	462 900 **3I/42.3**			
	35.5	–	–	–	–	–	–	–	28 500 **3I/37.5**	49 250 **3I/36.5**	60 350 **3I/36.3**	98 500 **3I/34.4**	120 700 **3I/35.4**	178 500 **3I/36.9**	238 000 **3I/37.2**	301 700 **3I/37.4**	375 500 **3I/37.4**	476 100 **3I/38.4**			
	31.5	–	2500 **3I/33.5**	2800 **3I/34.9**	5 380 **3I/32.8**	6 330 **3I/32.8**	11 050 **3I/32.6**	18 350 **3I/33.5**	28 300 **3I/32.2**	44 200 **3I/31.6**	58 750 **3I/32.8**	93 300 **3I/31.5**	124 600 **3I/30.6**	177 900 **3I/33.5**	245 700 **3I/32.5**	311 500 **3I/33.5**	387 600 **3I/33.5**	491 500 **3I/34.7**			
	28	–	–	–	–	–	9 250 **2I/28.8**	–	26 250 **3I/29.1**	44 800 **3I/28.4**	52 600 **3I/28.6**	91 050 **3I/27.2**	118 200 **3I/27.3**	182 800 **3I/28.7**	236 100 **3I/28.8**	320 000 **3I/30**	398 300 **3I/30**	484 800 **3I/30.3**			
	25	1 090 **2I/24.4**	2360 **2I/24.1**	2 950 **2I/25.1**	4 450 **2I/26**	5 240 **2I/26**	10 600 **2I/23.7**	21 600 **2I/24.1**	30 300 **2I/24.1**	46 200 **2I/24.6**	65 200 **2I/25.4**	95 750 **2I/24.2**	123 800 **2I/25**	190 000 **2I/25**	245 800 **2I/24.6**	267 700 **2I/25**	391 900 **2I/25**	434 300 **2I/25.7**			
	22.4	–	–	–	–	–	–	–	34 150 **2I/21.7**	51 500 **2I/22.5**	70 050 **2I/23.3**	98 700 **2I/22.2**	126 700 **2I/23**	201 000 **2I/22**	237 900 **2I/22.2**	301 700 **2I/22.8**	399 200 **2I/22.8**	476 600 **2I/23.4**			
	20	1 270 **2I/20.1**	2 710 **2I/19.3**	3 220 **2I/20.1**	5 280 **2I/20.8**	6 210 **2I/20.8**	11 500 **2I/19.3**	23 000 **2I/19.3**	34 700 **2I/19.6**	54 750 **2I/20.7**	66 800 **2I/20.8**	100 700 **2I/20.3**	129 700 **2I/20**	203 900 **2I/19.7**	255 900 **2I/20.1**	324 300 **2I/20.6**	402 200 **2I/20.6**	512 700 **2I/20.3**			
	18	–	–	–	–	–	–	–	34 400 **2I/17.6**	53 650 **2I/18.1**	71 850 **2I/18**	99 350 **2I/17.6**	135 100 **2I/18.1**	208 500 **2I/17.8**	266 500 **2I/17.9**	338 500 **2I/17.8**	421 500 **2I/17.8**	529 700 **2I/18.3**			
	16	1 500 **2I/16.3**	2 790 **2I/15.8**	3 640 **2I/16.5**	6 250 **2I/15.7**	7 380 **2I/15.7**	11 850 **2I/16.1**	22 300 **2I/15.8**	31 550 **2I/15.1**	57 850 **2I/15.7**	66 900 **2I/16.6**	100 700 **2I/16.1**	128 800 **2I/15.6**	196 300 **2I/16.2**	251 200 **2I/15.7**	343 200 **2I/15.9**	427 500 **2I/15.9**	519 800 **2I/16**			
	14	–	–	–	–	–	–	–	34 900 **2I/14.7**	56 800 **2I/14.1**	72 200 **2I/14.4**	101 800 **2I/13.9**	125 400 **2I/14.6**	201 200 **2I/14.6**	245 700 **2I/14.7**	348 200 **2I/14.3**	425 700 **2I/14.3**	541 800 **2I/14.4**			
	12.5	1 500 **2I/12.3**	2 780 **2I/13.1**	3 230 **2I/13.6**	5 290 **2I/13.7**	6 220 **2I/13.7**	11 400 **2I/12.3**	23 550 **2I/13.1**	35 500 **2I/13.3**	55 600 **2I/13.6**	67 800 **2I/13.6**	99 800 **2I/13**	133 500 **2I/12.8**	208 800 **2I/13.1**	264 300 **2I/13.3**	334 200 **2I/13.4**	407 200 **2I/13.4**	529 000 **2I/13.1**			
									132	204	275	395	539	795	1 028	–	–	–	11.2	2800	**250**
	11.2	–	–	–	–	–	–	–	35 250 **2I/11.9**	54 600 **2I/11.9**	73 100 **2I/11.8**	99 600 **2I/11.2**	139 400 **2I/11.5**	211 500 **2I/11.8▲**	275 500 **2I/11.9▲**	353 100 **2I/11.5**	441 400 **2I/11.5**	551 100 **2I/11.8**			
		6	10.6	13	24.2	28.5	45.4	89.1	123	226	270	391	563	749	1 064	–	–	–	10	2500	
	10	1 550 **2I/10.2**	2 870 **2I/10.7**	3 670 **2I/11.2**	6 290 **2I/10.3**	7 400 **2I/10.3**	11 700 **2I/10.2**	24 100 **2I/10.7**	31 600 **2I/10.2**	58 800 **2I/10.3**	72 750 **2I/10.7**	101 000 **2I/10.2**	141 300 **2I/9.95**	202 800 **2I/10.7▲**	279 200 **2I/10.4▲**	354 300 **2I/10.3**	441 700 **2I/10.3**	558 600 **2I/10.7**			
									112	193	222	411	521	795	1 026	–	–	–	9	2240	
	9	–	–	–	–	–	–	–	29 200 **2I/9.22**	50 250 **2I/9.24**	58 100 **2I/9.31**	102 300 **2I/8.85**	130 100 **2I/8.88**	205 500 **2I/9.19**	266 300 **2I/9.22**	359 000 **2I/9.24**	447 500 **2I/9.24**	534 400 **2I/9.31**			

For n_1 lower than 560 rpm see page 107.
▲ Possible forced lubrication with heat exchanger: consult us.

$n_{N2} \cdot L_h$ rpm · h	i_N	Nominal output power P_{N2} [hp] / Nominal output torque T_{N2} [lb in] / Train of gears / ratio ... / i																	i_N	n_1 rpm	n_{N2}
		50	63	64	80	81	100	125	140	160	180	200	225	250	280	320	321	360			
3 150 000	8	5.56 1 400 2I/8.01	10.9 2 830 2I/8.26	13.6 3 420 2I/7.99	25.7 6 500 2I/8.03	30.2 7 640 2I/8.03	46.4 11 700 2I/8.01	91.9 23 950 2I/8.26	–	201 50 800 2I/8.03	–	411 103 700 2I/8.01	–	800 208 300 2I/8.26	–	1 438 363 900 2I/8.03▲	1 792 453 600 2I/8.03▲	–	8	2000	**250**
	6.3	5.02 1 270 2I/6.42	9.3 2 390 2I/6.53	11.6 3 140 2I/6.86	21.1 5 330 2I/6.41	25.8 6 530 2I/6.41	46 11 600 2I/6.42	80.9 20 800 2I/6.53	–	165 41 650 2I/6.41	–	378 95 550 2I/6.42	–	744 191 500 2I/6.53	–	1 285 324 600 2I/6.41	1 517 383 300 2I/6.41	–	6.3	1600	
	5	–	9.92 2500 I/5	–	19.4 5 080 I/5.2	–	43.9 10 650 I/4.82	86.1 21 700 I/5	120 30 250 I/5	191 47 500 I/4.92	246 62 850 I/5.07	380 94 250 I/4.92	471 120 500 I/5.07	596 152 500 I/5.08	946 238 400 I/5	1 214 301 300 I/4.92	1 517 376 600 I/4.92	1 628 416 400 I/5.07	5	1250	
	4.5	–	–	–	–	–	–	87.7 22 000 I/4.45	127 32 100 I/4.5	202 51 300 I/4.5	255 67 050 I/4.67	378 95 850 I/4.5	468 122 800 I/4.67	701 176 100 I/4.47	848 214 800 I/4.5	1 206 305 500 I/4.5	1 508 381 800 I/4.5	1 620 419 500 I/4.6	4.5	1120	
	4	–	11.9 3000 I/4	–	23.7 6 210 I/4.16	–	44.3 10 950 I/3.92	88.3 22 250 I/4	135 34 750 I/4.08	201 52 450 I/4.13	253 66 200 I/4.15	375 97 550 I/4.13	496 127 400 I/4.07	655 165 000 I/4	935 240 300 I/4.08	1 197 306 900 I/4.07	1 497 383 700 I/4.07	1 619 408 100 I/4	4	1000	
	3.55	–	–	–	–	–	–	102 25 700 I/3.62	135 34 500 I/3.64	193 48 750 I/3.62	281 70 850 I/3.6	384 96 000 I/3.57	494 126 800 I/3.67	695 175 900 I/3.62	889 226 800 I/3.64	1 203 294 900 I/3.5	1 504 368 600 I/3.5	1 611 406 100 I/3.6	3.55	900	
	3.15	–	11.6 3000 I/3.28	–	25.5 6300 I/3.13	–	49.1 12 650 I/3.27	99.3 25 700 I/3.28	142 35 050 I/3.13	212 52 400 I/3.13	274 70 100 I/3.25	379 97 450 I/3.27	515 128 900 I/3.18	655 169 500 I/3.28	984 247 000 I/3.19	1 187 292 900 I/3.13	1 483 366 100 I/3.13	1 582 405 000 I/3.25	3.15	800	
	2.8	–	–	–	–	–	–	109 26 500 I/2.75	139 34 850 I/2.82	193 48 250 I/2.81	243 61 050 I/2.83	394 98 850 I/2.82	501 126 100 I/2.83	724 180 700 I/2.81	913 228 900 I/2.82	1 164 290 600 I/2.81	1 455 363 200 I/2.81	1 636 411 400 I/2.83	2.8	710	
	2.5	–	12.1 3070 I/2.53	–	26.8 6 550 I/2.44	–	45.6 11 650 I/2.55	105 26 500 I/2.53	140 35 400 I/2.53	172 42 050 I/2.44	216 53 900 I/2.5	352 90 000 I/2.55	444 108 000 I/2.43	672 170 100 I/2.53	938 237 100 I/2.53	1 203 294 300 I/2.44	1 504 367 900 I/2.44	1 670 417 700 I/2.5	2.5	630	
	2.24	–	–	–	–	–	–	100 25 650 I/2.28	125 32 300 I/2.3	154 38 300 I/2.21	191 48 250 I/2.24	319 79 000 I/2.2	397 101 600 I/2.27	655 172 000 I/2.33	855 221 300 I/2.3	1 169 297 800 I/2.26	1 427 363 500 I/2.26	1 589 408 900 I/2.29	2.24	560	
2 800 000	63	–	2300 3I/60.1	2800 3I/62.6	4870 3I/66.3	5600 3I/66.3	10 300 3I/61.5	20 600 3I/60.2	30 000 3I/62	45 000 3I/63.5	65 000 3I/63.8	92 500 3I/62.6	128 000 3I/61.7	185 000 3I/61.5	211 900 3I/62.7	305 300 3I/67.1	381 700 3I/67.1	415 900 3I/66			
	56	–	–	–	–	–	–	–	31 500 3I/55.4	47 500 3I/55.5	65 000 3I/55.3	97 500 3I/54.1	135 800 3I/55.5	194 400 3I/55.6	219 700 3I/56	278 500 3I/57.8	346 500 3I/57.8	439 300 3I/59.4			
	50	–	2430 3I/49.4	3070 3I/51.5	5150 3I/49.8	6150 3I/49.8	10 900 3I/51.2	20 350 3I/49.5	31 500 3I/50.4	47 500 3I/50.8	67 000 3I/51	97 500 3I/52.6	136 000 3I/51.8	195 000 3I/51.7	219 300 3I/52.7	303 300 3I/52.9	379 100 3I/52.9	438 700 3I/52			
	45	–	–	–	–	–	–	–	32 950 3I/45.1	50 000 3I/44.4	64 250 3I/44.2	103 000 3I/45.4	141 400 3I/46.6	194 300 3I/46.7	231 400 3I/47.1	293 400 3I/45.5	365 100 3I/45.5	462 900 3I/46.8			
	40	–	2570 3I/40.8	3 240 3I/42.5	5 310 3I/43.6	6 240 3I/43.6	11 500 3I/39.1	20 550 3I/40.8	29 150 3I/38.7	51 950 3I/38.5	59 900 3I/39.9	106 000 3I/41.5	126 500 3I/40.4	182 200 3I/42.4	238 000 3I/41.2	301 700 3I/40.7	375 500 3I/40.7	476 100 3I/42.3			
	35.5	–	–	–	–	–	–	–	29 400 3I/37.5	51 000 3I/36.5	62 300 3I/36.3	102 000 3I/34.4	124 600 3I/35.4	184 900 3I/36.9	245 700 3I/37.2	311 500 3I/37.4	387 600 3I/37.4	491 500 3I/38.4			
	31.5	–	2570 3I/33.5	2900 3I/34.9	5 570 3I/32.8	6 560 3I/32.8	11 200 3I/32.6	18 850 3I/33.5	29 050 3I/32.2	45 850 3I/31.6	60 350 3I/32.8	96 700 3I/31.5	128 000 3I/30.6	182 800 3I/33.5	252 500 3I/32.5	320 000 3I/33.5	398 300 3I/33.5	504 900 3I/34.7			
	28	–	–	–	–	–	9 500 2I/28.8	–	26 950 3I/29.1	46 000 3I/28.4	54 000 3I/28.6	93 450 3I/27.2	121 300 3I/27.3	187 600 3I/28.7	242 400 3I/28.8	328 500 3I/30	408 800 3I/30	497 700 3I/30.3			

For n_1 lower than 560 rpm see page 107.
▲ Possible forced lubrication with heat exchanger: consult us.

$n_{N2} \cdot L_h$ rpm · h	i_N	50	63	64	80	81	100	125	140	160	180	200	225	250	280	320	321	360	i_N	n_1 rpm	n_{N2}
		Nominal output power P_{N2} [hp] Nominal output torque T_{N2} [lb in] Train of gears / ratio ... / i																			
2 800 000	25	1 090 2I/24.4	2430 2I/24.1	2 960 2I/25.1	4 470 2I/26	5 260 2I/26	10 900 2I/23.7	21 700 2I/24.1	30 400 2I/24.1	47 650 2I/24.6	67 550 2I/25.4	96 100 2I/24.2	128 200 2I/25	197 900 2I/25	254 600 2I/24.6	275 000 2I/25	406 000 2I/25	449 900 2I/25.7			
	22.4	–	–	–	–	–	–	–	34 950 2I/21.7	53 000 2I/22.5	72 450 2I/23.3	102 100 2I/22.2	131 100 2I/23	201 700 2I/22	241 200 2I/22.2	305 800 2I/22.8	413 000 2I/22.8	483 100 2I/23.4			
	20	1 270 2I/20.1	2 800 2I/19.3	3 240 2I/20.1	5 300 2I/20.8	6 230 2I/20.8	11 850 2I/19.3	23 700 2I/19.3	35 800 2I/19.6	56 500 2I/20.7	68 950 2I/20.8	103 900 2I/20.3	131 300 2I/20	210 400 2I/19.7	259 100 2I/20.1	328 400 2I/20.6	415 100 2I/20.6	519 200 2I/20.3			
	18	–	–	–	–	–	–	–	35 650 2I/17.6	55 600 2I/18.1	74 450 2I/18	102 900 2I/17.6	137 100 2I/18.1	216 000 2I/17.8	270 200 2I/17.9	343 200 2I/17.8	427 500 2I/17.8	537 200 2I/18.3			
	16	1 500 2I/16.3	2 890 2I/15.8	3 670 2I/16.5	6 270 2I/15.7	7 410 2I/15.7	12 250 2I/16.1	23 100 2I/15.8	32 550 2I/15.1	59 950 2I/15.7	69 350 2I/16.6	104 400 2I/16.1	132 100 2I/15.6	203 500 2I/16.2	254 800 2I/15.7	352 700 2I/15.9	440 900 2I/15.9	527 200 2I/16			
	14	–	–	–	–	–	–	–	35 000 2I/14.7	58 850 2I/14.1	74 850 2I/14.4	105 600 2I/13.9	129 900 2I/14.6	202 000 2I/14.6	249 200 2I/14.7	353 200 2I/14.3	431 800 2I/14.3	549 600 2I/14.4			
	12.5	5.43 1 500 2I/12.3	9.79 2 880 2I/13.1	10.6 3 240 2I/13.6	17.3 5 320 2I/13.7	20.3 6 250 2I/13.7	42.7 11 800 2I/12.3	83 24 400 2I/13.1	123 36 750 2I/13.3	186 56 950 2I/13.6	229 70 250 2I/13.6	355 103 400 2I/13	471 135 400 2I/12.8	735 216 300 2I/13.1▲	894 268 000 2I/13.3▲	– 338 900 2I/13.4	– 421 200 2I/13.4	– 536 500 2I/13.1	12.5	2800	224
	11.2	–	–	–	–	–	–	–	121 36 450 2I/11.9	189 56 500 2I/11.9	254 75 650 2I/11.8	362 102 000 2I/11.2	488 141 300 2I/11.5	735 218 800 2I/11.8▲	931 279 200 2I/11.9▲	– 365 400 2I/11.5	– 456 700 2I/11.5	– 558 600 2I/11.8	11.2	2500	
	10	5.55 1 600 2I/10.2	9.82 2 970 2I/10.7	11.7 3 680 2I/11.2	21.8 6 310 2I/10.3	25.6 7 420 2I/10.3	42.1 12 100 2I/10.2	82.5 24 900 2I/10.7	112 32 300 2I/10.2	210 60 750 2I/10.3	250 75 200 2I/10.7	358 103 100 2I/10.2	511 143 200 2I/9.95	680 205 500 2I/10.7	966 282 900 2I/10.4	– 361 600 2I/10.3	– 452 000 2I/10.3	– 566 000 2I/10.7	10	2240	
	9	–	–	–	–	–	–	–	104 30 200 2I/9.22	175 50 950 2I/9.24	201 58 900 2I/9.31	372 103 800 2I/8.85	471 131 900 2I/8.88	719 208 300 2I/9.19	929 269 900 2I/9.22	1 249 363 900 2I/9.24▲	1 558 453 600 2I/9.24▲	1 846 541 700 2I/9.31▲	9	2000	
	8	5.07 1 420 2I/8.01	10.1 2 920 2I/8.26	12.6 3 530 2I/7.99	23.6 6 650 2I/8.03	28.1 7 890 2I/8.03	43.1 12 100 2I/8.01	85.4 24 700 2I/8.26	–	183 51 450 2I/8.03	–	374 105 000 2I/8.01	–	729 210 900 2I/8.26	–	1 310 368 500 2I/8.03	1 633 459 300 2I/8.03	–	8	1800	
	6.3	4.46 1 290 2I/6.42	8.47 2 490 2I/6.53	10.6 3 270 2I/6.86	18.5 5 350 2I/6.41	23.2 6 690 2I/6.41	41.9 12 100 2I/6.42	71.9 21 150 2I/6.53	–	147 42 350 2I/6.41	–	336 97 100 2I/6.42	–	662 194 600 2I/6.53	–	1 142 329 900 2I/6.41	1 349 389 500 2I/6.41	–	6.3	1400	
	5	–	8.88 2500 I/5	–	17.4 5 100 I/5.2	–	40.1 10 900 I/4.82	78.7 22 150 I/5	107 30 250 I/5	172 47 650 I/4.92	225 64 200 I/5.07	347 96 150 I/4.92	434 123 900 I/5.07	552 157 600 I/5.08	876 246 400 I/5	1 124 311 300 I/4.92	1 405 389 200 I/4.92	1 508 430 300 I/5.07	5	1120	
	4.5	–	–	–	–	–	–	80.4 22 550 I/4.45	113 32 100 I/4.5	181 51 450 I/4.5	236 69 350 I/4.67	350 99 150 I/4.5	432 127 000 I/4.67	647 182 200 I/4.47	783 222 200 I/4.5	1 114 316 000 I/4.5	1 393 395 000 I/4.5	1 497 434 000 I/4.6	4.5	1000	
	4	–	10.8 3 030 I/4	–	21.4 6 230 I/4.16	–	41.2 11 300 I/3.92	82 23 000 I/4	126 35 900 I/4.08	187 54 150 I/4.13	235 68 300 I/4.15	348 100 700 I/4.13	461 131 500 I/4.07	608 170 300 I/4	869 248 000 I/4.08	1 112 316 800 I/4.07	1 390 396 000 I/4.07	1 504 421 200 I/4	4	900	
	3.55	–	–	–	–	–	–	90.2 25 700 I/3.62	125 35 750 I/3.64	177 50 500 I/3.62	257 73 000 I/3.6	353 99 450 I/3.57	455 131 400 I/3.67	640 182 300 I/3.62	819 234 900 I/3.64	1 108 305 500 I/3.5	1 385 381 800 I/3.5	1 483 420 700 I/3.6	3.55	800	
	3.15	–	10.5 3070 I/3.28	–	23.4 6500 I/3.13	–	43.6 12 650 I/3.27	90.9 26 500 I/3.28	131 36 300 I/3.13	195 54 300 I/3.13	243 70 100 I/3.25	348 101 000 I/3.27	474 133 600 I/3.18	602 175 700 I/3.28	905 256 000 I/3.19	1 091 303 600 I/3.13	1 364 379 500 I/3.13	1 455 419 800 I/3.25	3.15	710	
	2.8	–	–	–	–	–	–	96.3 26 500 I/2.75	128 36 100 I/2.82	171 48 250 I/2.81	215 61 050 I/2.83	359 101 400 I/2.82	447 126 600 I/2.83	666 187 300 I/2.81	840 237 300 I/2.82	1 070 301 200 I/2.81	1 338 376 500 I/2.81	1 504 426 400 I/2.83	2.8	630	

For n_1 lower than 560 rpm see page 107.
▲ Possible forced lubrication with heat exchanger: consult us.

$n_{N2} \cdot L_h$ rpm · h	i_N	50	63	64	80	81	100	125	140	160	180	200	225	250	280	320	321	360	i_N	n_1 rpm	n_{N2}
		Nominal output power P_{N2} [hp] / Nominal output torque T_{N2} [lb in] / Train of gears / ratio ... / i																			
2 800 000	2.5		10.8		23.8		40.6	95.5	125	153	192	313	395	619	847	1 108	1 385	1 538	2.5	560	**224**
		–	3070 I/2.53	–	6 550 I/2.44	–	11 650 I/2.55	27 200 I/2.53	35 400 I/2.53	42 050 I/2.44	53 900 I/2.5	90 000 I/2.55	108 000 I/2.43	176 200 I/2.53	240 700 I/2.53	304 900 I/2.44	381 100 I/2.44	432 700 I/2.5			
2 500 000	71	–	–	–	–	–	–	–	31 500 3I/72.8	46 200 3I/74.9	64 250 3I/74.6	95 000 3I/72.6	132 000 3I/74.5	190 000 3I/74.7	214 000 3I/75.3	281 600 3I/71	351 900 3I/71	428 000 3I/73			
	63	–	2360 3I/60.1	2900 3I/62.6	5000 3I/66.3	5800 3I/66.3	10 600 3I/61.5	21 200 3I/60.2	31 500 3I/62	46 200 3I/63.5	67 000 3I/63.8	95 000 3I/62.6	132 000 3I/61.7	190 000 3I/61.5	219 200 3I/62.7	315 900 3I/67.1	394 900 3I/67.1	427 000 3I/66			
	56	–	–	–	–	–	–	–	32 500 3I/55.4	48 700 3I/55.5	67 000 3I/55.3	100 000 3I/54.1	140 300 3I/55.5	200 900 3I/55.6	225 700 3I/56	286 100 3I/57.8	356 000 3I/57.8	451 400 3I/59.4			
	50	–	2500 3I/49.4	3150 3I/51.5	5300 3I/49.8	6300 3I/49.8	11 200 3I/51.2	21 050 3I/49.5	32 500 3I/50.4	48 700 3I/50.8	69 000 3I/51	100 000 3I/52.6	140 000 3I/51.8	200 000 3I/51.7	224 900 3I/52.7	313 800 3I/52.9	392 200 3I/52.9	449 800 3I/52			
	45	–	–	–	–	–	–	–	34 000 3I/45.1	51 500 3I/44.4	66 350 3I/44.2	106 000 3I/45.4	146 000 3I/46.6	200 500 3I/46.7	238 000 3I/47.1	301 700 3I/45.5	375 500 3I/45.5	476 100 3I/46.8			
	40	–	2650 3I/40.8	3 250 3I/42.5	5 330 3I/43.6	6 270 3I/43.6	11 800 3I/39.1	21 300 3I/40.8	30 200 3I/38.7	53 850 3I/38.5	62 050 3I/39.9	109 000 3I/41.5	131 000 3I/40.4	188 800 3I/42.4	245 700 3I/41.2	311 500 3I/40.7	387 600 3I/40.7	491 500 3I/42.3			
	35.5	–	–	–	–	–	–	–	30 400 3I/37.5	52 900 3I/36.5	64 000 3I/36.3	105 700 3I/34.4	128 000 3I/35.4	191 700 3I/36.9	252 500 3I/37.2	320 000 3I/37.4	398 300 3I/37.4	504 900 3I/38.4			
	31.5	–	2650 3I/33.5	3000 3I/34.9	5 780 3I/32.8	6 800 3I/32.8	11 500 3I/32.6	19 350 3I/33.5	29 850 3I/32.2	47 500 3I/31.6	61 950 3I/32.8	100 200 3I/31.5	131 400 3I/30.6	187 600 3I/33.5	259 200 3I/32.5	328 500 3I/33.5	408 800 3I/33.5	518 300 3I/34.7			
	28	–	–	–	–	–	9 750 2I/28.8	–	27 700 3I/29.1	47 250 3I/28.4	55 500 3I/28.6	96 000 3I/27.2	124 600 3I/27.3	192 800 3I/28.7	249 100 3I/28.8	337 500 3I/30	420 000 3I/30	511 300 3I/30.3			
	25	1 100 2I/24.4	2 530 2I/24.1	2 970 2I/25.1	4 490 2I/26	5 280 2I/26	10 900 2I/23.7	21 750 2I/24.1	30 500 2I/24.1	47 800 2I/24.6	69 450 2I/25.4	96 450 2I/24.2	132 700 2I/25	198 600 2I/25	263 400 2I/24.6	278 800 2I/25	409 400 2I/25	465 500 2I/25.7			
	22.4	–	–	–	–	–	–	–	35 050 2I/21.7	53 000 2I/22.5	74 800 2I/23.3	104 000 2I/22.2	135 300 2I/23	202 300 2I/22	244 200 2I/22.2	309 700 2I/22.8	421 200 2I/22.8	489 200 2I/23.4			
	20	1 280 2I/20.1	2 900 2I/19.3	3 250 2I/20.1	5 320 2I/20.8	6 260 2I/20.8	12 300 2I/19.3	24 550 2I/19.3	37 100 2I/19.6	57 050 2I/20.7	71 400 2I/20.8	107 700 2I/20.3	135 300 2I/20	218 000 2I/19.7	262 800 2I/20.1	333 100 2I/20.6	430 000 2I/20.6	526 600 2I/20.3			
	18	–	–	–	–	–	–	–	36 950 2I/17.6	57 600 2I/18.1	75 000 2I/18	106 700 2I/17.6	139 000 2I/18.1	223 900 2I/17.8	274 100 2I/17.9	348 200 2I/17.8	433 600 2I/17.8	544 900 2I/18.3			
	16	1 510 2I/16.3	3 000 2I/15.8	3 690 2I/16.5	6 290 2I/15.7	7 440 2I/15.7	12 700 2I/16.1	23 950 2I/15.8	33 700 2I/15.1	60 000 2I/15.7	71 850 2I/16.6	108 200 2I/16.1	136 900 2I/15.6	210 900 2I/16.2	258 500 2I/15.7	365 600 2I/15.9	457 000 2I/15.9	534 800 2I/16			
									106	193	239	349	409	617	764	–	–	–	14	2800	**200**
	14	–	–	–	–	–	–	–	35 150 2I/14.7	60 950 2I/14.1	77 500 2I/14.4	109 400 2I/13.9	134 600 2I/14.6	202 800 2I/14.6 ▲	252 700 2I/14.7 ▲	358 200 2I/14.3	437 900 2I/14.3	557 400 2I/14.4			
		4.86	9.05	9.49	15.6	18.2	39.4	76.7	113	167	211	328	427	679	809	–	–	–	12.5	2500	
	12.5	1 510 2I/12.3	2 980 2I/13.1	3 260 2I/13.6	5 390 2I/13.7	6 270 2I/13.7	12 200 2I/12.3	25 250 2I/13.1	38 050 2I/13.3	57 150 2I/13.6	72 650 2I/13.6	107 000 2I/13	137 200 2I/12.8	223 800 2I/13.1 ▲	271 700 2I/13.3 ▲	343 600 2I/13.4	435 800 2I/13.4	543 800 2I/13.1			
									112	175	235	335	443	680	845	–	–	–	11.2	2240	
	11.2	–	–	–	–	–	–	–	37 650 2I/11.9	58 400 2I/11.9	78 200 2I/11.8	105 500 2I/11.2	143 200 2I/11.5	226 100 2I/11.8	282 900 2I/11.9	370 000 2I/11.5	462 500 2I/11.5	566 000 2I/11.8			

For n_1 lower than 560 rpm see page 107.
▲ Possible forced lubrication with heat exchanger: consult us.

$n_{N2} \cdot L_h$ rpm · h	i_N	50	63	64	80	81	100	125	140	160	180	200	225	250	280	320	321	360	i_N	n_1 rpm	n_{N2}
		Nominal output power P_{N2} [hp] Nominal output torque T_{N2} [lb in] Train of gears / ratio ... / i																			
2 500 000	10	5.13 1 650 2I/10.2	9.07 3 070 2I/10.7	10.5 3 690 2I/11.2	19.5 6 330 2I/10.3	23 7 450 2I/10.3	38.9 12 550 2I/10.2	76.2 25 800 2I/10.7	104 33 450 2I/10.2	194 62 850 2I/10.3	231 77 800 2I/10.7	331 106 600 2I/10.2	463 145 200 2I/9.95	629 212 600 2I/10.7	874 286 800 2I/10.4	1 153 374 100 2I/10.3 ▲	1 441 467 700 2I/10.3 ▲	1 705 573 700 2I/10.7 ▲	10	2000	200
	9	–	–	–	–	–	–	–	96.5 31 150 2I/9.22	159 51 600 2I/9.24	183 59 600 2I/9.31	346 107 200 2I/8.85	430 133 600 2I/8.88	656 210 900 2I/9.19	846 273 300 2I/9.22	1 139 368 500 2I/9.24	1 420 459 300 2I/9.24	1 683 548 500 2I/9.31	9	1800	
	8	4.59 1 450 2I/8.01	9.3 3 030 2I/8.26	11.6 3 660 2I/7.99	21.1 6 670 2I/8.03	25.8 8 170 2I/8.03	39.7 12 500 2I/8.01	78.6 25 600 2I/8.26	–	165 52 150 2I/8.03	–	338 106 500 2I/8.01	–	657 213 900 2I/8.26	–	1 181 373 700 2I/8.03	1 472 465 800 2I/8.03	–	8	1600	
	6.3	4 1 290 2I/6.42	7.82 2 580 2I/6.53	9.78 3 380 2I/6.86	16.6 5 370 2I/6.41	20.7 6 710 2I/6.41	38.7 12 500 2I/6.42	64.6 21 300 2I/6.53	–	132 42 600 2I/6.41	–	302 97 650 2I/6.42	–	594 195 800 2I/6.53	–	1 030 333 000 2I/6.41	1 212 392 000 2I/6.41	–	6.3	1250	
	5	–	8.15 2570 I/5	–	15.6 5 120 I/5.2	–	35.9 10 900 I/4.82	70.5 22 200 I/5	95.9 30 250 I/5	154 47 800 I/4.92	201 64 200 I/5.07	311 96 500 I/4.92	388 123 900 I/5.07	509 163 000 I/5.08	786 247 800 I/5	1 038 322 100 I/4.92	1 298 402 600 I/4.92	1 393 445 200 I/5.07	5	1000	
	4.5	–	–	–	–	–	–	72.6 22 650 I/4.45	102 32 100 I/4.5	164 51 650 I/4.5	213 69 750 I/4.67	325 102 300 I/4.5	401 131 100 I/4.67	601 188 000 I/4.47	728 229 300 I/4.5	1 035 326 200 I/4.5	1 294 407 700 I/4.5	1 390 447 900 I/4.6	4.5	900	
	4	–	9.61 3 030 I/4	–	19.1 6 260 I/4.16	–	37.9 11 700 I/3.92	75.5 23 800 I/4	113 36 200 I/4.08	168 54 700 I/4.13	216 70 750 I/4.15	320 104 300 I/4.13	425 136 200 I/4.07	560 176 500 I/4	800 256 900 I/4.08	1 024 328 200 I/4.07	1 280 410 200 I/4.07	1 385 436 400 I/4	4	800	
	3.55	–	–	–	–	–	–	82.6 26 500 I/3.62	115 37 050 I/3.64	163 52 350 I/3.62	228 73 000 I/3.6	325 103 100 I/3.57	418 136 200 I/3.67	589 188 900 I/3.62	753 243 500 I/3.64	1 019 316 600 I/3.5	1 274 395 800 I/3.5	1 364 436 000 I/3.6	3.55	710	
	3.15	–	9.34 3070 I/3.28	–	20.7 6500 I/3.13	–	38.7 12 650 I/3.27	80.6 26 500 I/3.28	120 37 650 I/3.13	173 54 300 I/3.13	216 70 100 I/3.25	320 104 700 I/3.27	436 138 500 I/3.18	554 182 100 I/3.28	832 265 400 I/3.19	1 004 314 700 I/3.13	1 255 393 300 I/3.13	1 338 435 100 I/3.25	3.15	630	
	2.8	–	–	–	–	–	–	87.9 27 200 I/2.75	118 37 400 I/2.82	152 48 250 I/2.81	192 61 050 I/2.83	319 101 400 I/2.82	397 126 600 I/2.83	613 194 100 I/2.81	774 245 800 I/2.82	986 312 000 I/2.81	1 232 390 100 I/2.81	1 385 441 700 I/2.83	2.8	560	
2 240 000	80	–	2000 3I/75.2	2430 3I/78.2	4250 3I/82.7	4870 3I/82.7	9 000 3I/75.5	18 000 3I/75.3	30 000 3I/81.4	45 000 3I/85.7	65 000 3I/86.1	92 500 3I/84	128 000 3I/82.7	185 000 3I/82.7	233 800 3I/84.3	327 100 3I/82.5	387 000 3I/82.5	415 900 3I/81.1			
	71	–	–	–	–	–	–	–	32 500 3I/72.8	47 500 3I/74.9	66 450 3I/74.6	97 500 3I/72.6	136 000 3I/74.5	195 000 3I/74.7	219 700 3I/75.3	291 300 3I/71	364 100 3I/71	439 300 3I/73			
	63	–	2430 3I/60.1	3000 3I/62.6	5150 3I/66.3	6000 3I/66.3	10 900 3I/61.5	21 800 3I/60.2	31 500 3I/62	47 500 3I/63.5	67 000 3I/63.8	97 500 3I/62.6	136 000 3I/61.7	195 000 3I/61.5	226 500 3I/62.7	326 500 3I/67.1	408 100 3I/67.1	438 700 3I/66			
	56	–	–	–	–	–	–	–	33 500 3I/55.4	50 000 3I/55.5	69 000 3I/55.3	103 000 3I/54.1	145 200 3I/55.5	207 800 3I/55.6	231 400 3I/56	293 400 3I/57.8	365 100 3I/57.8	462 900 3I/59.4			
	50	–	2570 3I/49.4	3250 3I/51.5	5450 3I/49.8	6500 3I/49.8	11 500 3I/51.2	21 700 3I/49.5	33 500 3I/50.4	50 000 3I/50.8	71 000 3I/51	103 000 3I/52.6	145 000 3I/51.8	206 000 3I/51.7	231 300 3I/52.7	323 900 3I/52.9	404 800 3I/52.9	462 700 3I/52			
	45	–	–	–	–	–	–	–	35 250 3I/45.1	53 000 3I/44.4	68 700 3I/44.2	109 000 3I/45.4	151 200 3I/46.6	207 700 3I/46.7	245 700 3I/47.1	311 500 3I/45.5	387 600 3I/45.5	491 500 3I/46.8			
	40	–	2720 3I/40.8	3 270 3I/42.5	5 350 3I/43.6	6 290 3I/43.6	12 200 3I/39.1	22 050 3I/40.8	31 300 3I/38.7	55 800 3I/38.5	64 300 3I/39.9	112 000 3I/41.5	135 800 3I/40.4	195 700 3I/42.4	252 500 3I/41.2	320 000 3I/40.7	398 300 3I/40.7	504 900 3I/42.3			
	35.5	–	–	–	–	–	–	–	31 500 3I/37.5	54 800 3I/36.5	65 700 3I/36.3	109 600 3I/34.4	131 400 3I/35.4	198 700 3I/36.9	259 200 3I/37.2	328 500 3I/37.4	408 800 3I/37.4	518 300 3I/38.4			

For n_1 lower than 560 rpm see page 107.
▲ Possible forced lubrication with heat exchanger: consult us.

$n_{N2} \cdot L_h$ rpm · h	i_N	Nominal output power P_{N2} [hp] / Nominal output torque T_{N2} [lb in] / Train of gears / ratio ... / i																	i_N	n_1 rpm	n_{N2}
		50	63	64	80	81	100	125	140	160	180	200	225	250	280	320	321	360			
2 240 000	31.5	–	2720 3I/33.5	3070 3I/34.9	5 980 3I/32.8	6900 3I/32.8	11 800 3I/32.6	19 900 3I/33.5	30 650 3I/32.2	49 200 3I/31.6	63 650 3I/32.8	103 900 3I/31.5	135 000 3I/30.6	192 800 3I/33.5	266 300 3I/32.5	337 500 3I/33.5	420 000 3I/33.5	532 500 3I/34.7			
	28	–	–	–	–	–	9 750 2I/28.8	–	28 050 3I/29.1	47 900 3I/28.4	56 250 3I/28.6	97 300 3I/27.2	126 300 3I/27.3	195 400 3I/28.7	252 400 3I/28.8	342 100 3I/30	425 800 3I/30	518 300 3I/30.3			
	25	1 100 2I/24.4	2 540 2I/24.1	2 980 2I/25.1	4 500 2I/26	5 290 2I/26	11 450 2I/23.7	21 850 2I/24.1	30 600 2I/24.1	48 000 2I/24.6	69 650 2I/25.4	96 800 2I/24.2	136 900 2I/25	199 300 2I/25	267 800 2I/24.6	282 300 2I/25	410 700 2I/25	480 400 2I/25.7			
	22.4	–	–	–	–	–	–	–	35 200 2I/21.7	54 700 2I/22.5	77 250 2I/23.3	104 400 2I/22.2	140 100 2I/23	203 100 2I/22	247 700 2I/22.2	314 100 2I/22.8	422 800 2I/22.8	496 200 2I/23.4			
	20	1 280 2I/20.1	3 010 2I/19.3	3 260 2I/20.1	5 340 2I/20.8	6 280 2I/20.8	12 750 2I/19.3	25 450 2I/19.3	38 100 2I/19.6	57 300 2I/20.7	74 000 2I/20.8	111 600 2I/20.3	140 200 2I/20	225 900 2I/19.7	266 500 2I/20.1	337 900 2I/20.6	445 700 2I/20.6	534 800 2I/20.3			
	18	–	–	–	–	–	–	–	38 300 2I/17.6	59 750 2I/18.1	75 000 2I/18	110 600 2I/17.6	141 000 2I/18.1	232 100 2I/17.8	278 000 2I/17.9	353 200 2I/17.8	439 900 2I/17.8	552 700 2I/18.3			
	16	4.12 1 520 2I/16.3	8.72 3 110 2I/15.8	9.95 3 700 2I/16.5	17.9 6 320 2I/15.7	21.2 7 470 2I/15.7	36.4 13 150 2I/16.1	69.6 24 800 2I/15.8	103 34 950 2I/15.1	174 61 500 2I/15.7	199 74 450 2I/16.6	310 112 100 2I/16.1	403 141 900 2I/15.6	600 218 500 2I/16.2	742 262 200 2I/15.7	– 378 700 2I/15.9	– 473 400 2I/15.9	– 542 400 2I/16	16	2800	**180**
	14	–	–	–	–	–	–	–	95.2 35 250 2I/14.7	169 60 000 2I/14.1	221 80 200 2I/14.4	323 113 100 2I/13.9	378 139 300 2I/14.6	553 203 500 2I/14.6▲	691 256 200 2I/14.7▲	– 363 100 2I/14.3	– 443 900 2I/14.3	– 565 000 2I/14.4	14	2500	
	12.5	4.37 1 510 2I/12.3	8.38 3 080 2I/13.1	8.53 3 270 2I/13.6	14.2 5 470 2I/13.7	16.4 6 330 2I/13.7	36.5 12 650 2I/12.3	71 26 100 2I/13.1	102 38 200 2I/13.3	150 57 350 2I/13.6	196 75 100 2I/13.6	303 110 600 2I/13	387 139 000 2I/12.8	621 228 300 2I/13.1	734 275 200 2I/13.3	– 348 100 2I/13.4	– 450 400 2I/13.4	– 551 000 2I/13.1	12.5	2240	
	11.2	–	–	–	–	–	–	–	104 38 950 2I/11.9	161 60 400 2I/11.9	217 80 900 2I/11.8	309 109 100 2I/11.2	401 145 200 2I/11.5	628 233 600 2I/11.8	765 286 800 2I/11.9	1 024 371 300 2I/11.5▲	1 281 464 100 2I/11.5▲	1 539 573 700 2I/11.8▲	11.2	2000	
	10	4.74 1 700 2I/10.2	8.43 3 170 2I/10.7	9.45 3 710 2I/11.2	17.6 6 350 2I/10.3	20.7 7 470 2I/10.3	36.1 12 950 2I/10.2	70.8 26 600 2I/10.7	96.5 34 500 2I/10.2	177 63 700 2I/10.3	215 80 250 2I/10.7	307 110 100 2I/10.2	422 147 000 2I/9.95	584 219 400 2I/10.7	796 290 400 2I/10.4	1 071 386 100 2I/10.3	1 339 482 700 2I/10.3	1 554 581 000 2I/10.7	10	1800	
	9	–	–	–	–	–	–	–	88.9 32 300 2I/9.22	144 52 300 2I/9.24	165 60 450 2I/9.31	319 111 000 2I/8.85	388 135 600 2I/8.88	591 213 900 2I/9.19	763 277 200 2I/9.22	1 031 375 400 2I/9.24	1 289 469 300 2I/9.24	1 517 556 300 2I/9.31	9	1600	
	8	4.18 1 510 2I/8.01	8.47 3 150 2I/8.26	10.6 3 810 2I/7.99	18.5 6 700 2I/8.03	22.8 8 250 2I/8.03	36.1 13 000 2I/8.01	71.6 26 650 2I/8.26	–	147 53 000 2I/8.03	–	306 110 400 2I/8.01	–	584 217 400 2I/8.26	–	1 050 379 700 2I/8.03	1 309 473 300 2I/8.03	–	8	1400	
	6.3	3.59 1 300 2I/6.42	7.24 2 660 2I/6.53	9.06 3 500 2I/6.86	14.9 5 390 2I/6.41	18.7 6 730 2I/6.41	35.8 12 950 2I/6.42	58.2 21 400 2I/6.53	–	119 42 900 2I/6.41	–	272 98 250 2I/6.42	–	536 196 900 2I/6.53	–	931 336 100 2I/6.41	1 093 394 500 2I/6.41	–	6.3	1120	
	5	–	7.34 2570 I/5	–	14.1 5 140 I/5.2	–	32.5 10 950 I/4.82	63.7 22 300 I/5	86.3 30 250 I/5	139 48 000 I/4.92	181 64 200 I/5.07	281 96 850 I/4.92	349 123 900 I/5.07	473 168 300 I/5.08	708 247 800 I/5	953 328 400 I/4.92	1 191 410 500 I/4.92	1 294 459 500 I/5.07	5	900	
	4.5	–	–	–	–	–	–	64.7 22 700 I/4.45	90.5 32 100 I/4.5	146 51 850 I/4.5	190 69 750 I/4.67	291 103 000 I/4.5	369 135 600 I/4.67	554 194 800 I/4.47	670 237 600 I/4.5	953 337 900 I/4.5	1 191 422 400 I/4.5	1 280 464 000 I/4.6	4.5	800	
	4	–	8.53 3 030 I/4	–	17 6 280 I/4.16	–	34.9 12 150 I/3.92	69.5 24 700 I/4	100 36 300 I/4.08	150 54 900 I/4.13	199 73 350 I/4.15	295 108 100 I/4.13	391 141 200 I/4.07	515 182 900 I/4	736 266 300 I/4.08	942 340 100 I/4.07	1 178 425 200 I/4.07	1 274 452 300 I/4	4	710	
	3.55	–	–	–	–	–	–	74.6 27 000 I/3.62	105 38 300 I/3.64	150 54 250 I/3.62	203 73 000 I/3.6	299 106 800 I/3.57	385 141 100 I/3.67	541 195 800 I/3.62	692 252 400 I/3.64	937 328 200 I/3.5	1 171 410 200 I/3.5	1 255 451 900 I/3.6	3.55	630	

For n_1 lower than 560 rpm see page 107.
▲ Possible forced lubrication with heat exchanger: consult us.

$n_{N2} \cdot L_h$ rpm · h	i_N	50	63	64	80	81	100	125	140	160	180	200	225	250	280	320	321	360	i_N	n_1 rpm	n_{N2}
		Nominal output power P_{N2} [hp] Nominal output torque T_{N2} [lb in] Train of gears / ratio ... / i																			
2 240 000	3.15	–	8.3 3070 I/3.28	–	18.4 6500 I/3.13	–	34.4 12 650 I/3.27	73.5 27 200 I/3.28	111 39 000 I/3.13	154 54 300 I/3.13	192 70 100 I/3.25	295 108 400 I/3.27	392 140 000 I/3.18	510 188 700 I/3.28	766 274 900 I/3.19	924 326 000 I/3.13	1 155 407 500 I/3.13	1 232 450 700 I/3.25	3.15	560	**180**
2 000 000	90	–	–	–	–	–	–	–	31 500 3I/89.4	46 200 3I/93.7	61 500 3I/93.3	95 000 3I/86.4	132 000 3I/88.8	190 000 3I/89	222 800 3I/89.7	302 500 3I/90.1	378 200 3I/90.1	428 000 3I/92.7			
	80	–	2060 3I/75.2	2500 3I/78.2	4370 3I/82.7	5000 3I/82.7	9 250 3I/75.5	18 500 3I/75.3	31 500 3I/81.4	46 200 3I/85.7	67 000 3I/86.1	95 000 3I/84	132 000 3I/82.7	190 000 3I/82.7	241 900 3I/84.3	325 000 3I/82.5	400 000 3I/82.5	427 000 3I/81.1			
	71	–	–	–	–	–	–	–	32 500 3I/72.8	48 700 3I/74.9	68 700 3I/74.6	100 000 3I/72.6	140 000 3I/74.5	200 000 3I/74.7	225 700 3I/75.3	301 000 3I/71	376 300 3I/71	451 400 3I/73			
	63	–	2500 3I/60.1	3070 3I/62.6	5 360 3I/66.3	6 310 3I/66.3	11 200 3I/61.5	22 400 3I/60.2	32 500 3I/62	48 700 3I/63.5	69 000 3I/63.8	100 000 3I/62.6	140 000 3I/61.7	200 000 3I/61.5	234 400 3I/62.7	337 800 3I/67.1	422 200 3I/67.1	449 800 3I/66			
	56	–	–	–	–	–	–	–	33 500 3I/55.4	51 500 3I/55.5	71 000 3I/55.3	106 000 3I/54.1	149 800 3I/55.5	214 500 3I/55.6	238 000 3I/56	301 700 3I/57.8	375 500 3I/57.8	476 100 3I/59.4			
	50	–	2650 3I/49.4	3350 3I/51.5	5600 3I/49.8	6700 3I/49.8	11 800 3I/51.2	22 500 3I/49.5	34 500 3I/50.4	51 500 3I/50.8	73 000 3I/51	106 000 3I/52.6	150 000 3I/51.8	212 000 3I/51.7	238 800 3I/52.7	335 500 3I/52.9	419 400 3I/52.9	477 600 3I/52			
	45	–	–	–	–	–	–	–	36 500 3I/45.1	54 500 3I/44.4	71 250 3I/44.2	112 000 3I/45.4	156 800 3I/46.6	215 300 3I/46.7	252 500 3I/47.1	320 000 3I/45.5	398 300 3I/45.5	504 900 3I/46.8			
	40	–	2800 3I/40.8	3 280 3I/42.5	5 370 3I/43.6	6 310 3I/43.6	12 500 3I/39.1	22 900 3I/40.8	32 450 3I/38.7	56 000 3I/38.5	66 650 3I/39.9	115 000 3I/41.5	140 800 3I/40.4	202 800 3I/42.4	259 200 3I/41.2	328 500 3I/40.7	408 800 3I/40.7	518 300 3I/42.3			
	35.5	–	–	–	–	–	–	–	32 650 3I/37.5	56 800 3I/36.5	67 500 3I/36.3	113 500 3I/34.4	135 000 3I/35.4	205 800 3I/36.9	266 300 3I/37.2	337 500 3I/37.4	420 000 3I/37.4	532 500 3I/38.4			
	31.5	–	2800 3I/33.5	3070 3I/34.9	6 190 3I/32.8	6900 3I/32.8	11 800 3I/32.6	20 150 3I/33.5	31 050 3I/32.2	50 900 3I/31.6	64 500 3I/32.8	107 400 3I/31.5	136 900 3I/30.6	195 400 3I/33.5	269 900 3I/32.5	342 100 3I/33.5	425 800 3I/33.5	539 800 3I/34.7			
	28	–	–	–	–	–	10 000 2I/28.8	–	28 400 3I/29.1	48 500 3I/28.4	56 950 3I/28.6	98 550 3I/27.2	127 900 3I/27.3	197 900 3I/28.7	255 600 3I/28.8	346 500 3I/30	431 100 3I/30	524 900 3I/30.3			
	25	1 100 2I/24.4	2 550 2I/24.1	2 990 2I/25.1	4 520 2I/26	5 310 2I/26	11 500 2I/23.7	21 900 2I/24.1	30 750 2I/24.1	48 150 2I/24.6	69 900 2I/25.4	97 150 2I/24.2	140 000 2I/25	200 000 2I/25	268 800 2I/24.6	286 300 2I/25	412 300 2I/25	497 700 2I/25.7			
	22.4	–	–	–	–	–	–	–	35 300 2I/21.7	54 900 2I/22.5	77 550 2I/23.3	104 800 2I/22.2	145 200 2I/23	203 900 2I/22	254 200 2I/22.2	318 600 2I/22.8	424 400 2I/22.8	504 200 2I/23.4			
	20	1 290 2I/20.1	3 120 2I/19.3	3 270 2I/20.1	5 360 2I/20.8	6 300 2I/20.8	13 200 2I/19.3	26 250 2I/19.3	38 250 2I/19.6	57 500 2I/20.7	76 700 2I/20.8	114 100 2I/20.3	145 300 2I/20	228 800 2I/19.7	274 200 2I/20.1	342 700 2I/20.6	462 000 2I/20.6	554 300 2I/20.3			
									100	152	191	289	357	584	698	–	–	–	18	2800	**160**
	18	–	–	–	–	–	–	–	39 650 2I/17.6	61 900 2I/18.1	77 500 2I/18	114 500 2I/17.6	145 100 2I/18.1	234 100 2I/17.8	282 000 2I/17.9	358 200 2I/17.8	446 700 2I/17.8	560 500 2I/18.3			
		3.69	8.06	8.91	16	19	33.6	64.3	95.2	156	184	286	372	554	672	–	–	–	16	2500	
	16	1 520 2I/16.3	3 220 2I/15.8	3 710 2I/16.5	6 340 2I/15.7	7 500 2I/15.7	13 600 2I/16.1	25 650 2I/15.8	36 150 2I/15.1	61 500 2I/15.7	77 000 2I/16.6	116 000 2I/16.1	146 800 2I/15.6	226 100 2I/16.2	265 700 2I/15.7	391 800 2I/15.9	489 800 2I/15.9	553 300 2I/16			
									85.6	155	205	299	350	497	629	–	–	–	14	2240	
	14	–	–	–	–	–	–	–	35 400 2I/14.7	61 500 2I/14.1	82 900 2I/14.4	116 900 2I/13.9	143 900 2I/14.6	204 200 2I/14.6	260 200 2I/14.7	367 800 2I/14.3	454 400 2I/14.3	572 400 2I/14.4			

For n_1 lower than 560 rpm see page 107.

$n_{N2} \cdot L_h$ rpm · h	i_N	50	63	64	80	81	100	125	140	160	180	200	225	250	280	320	321	360	i_N	n_1 rpm	n_{N2}
		Nominal output power P_{N2} [hp] Nominal output torque T_{N2} [lb in] Train of gears / ratio ... / i																			
2 000 000	12.5	3.92 1 520 2I/12.3	7.64 3 150 2I/13.1	7.64 3 280 2I/13.6	12.8 5 540 2I/13.7	14.9 6 410 2I/13.7	33.7 13 050 2I/12.3	63.9 26 300 2I/13.1	91.3 38 350 2I/13.3	134 57 550 2I/13.6	180 77 550 2I/13.6	279 114 100 2I/13	357 143 400 2I/12.8	556 229 200 2I/13.1	668 280 600 2I/13.3	838 352 800 2I/13.4▲	1 107 466 000 2I/13.4▲	1 348 558 500 2I/13.1▲	12.5	2000	**160**
	11.2	–	–	–	–	–	–	–	96.1 40 050 2I/11.9	150 62 350 2I/11.9	202 83 500 2I/11.8	287 112 600 2I/11.2	365 147 000 2I/11.5	567 234 300 2I/11.8	697 290 400 2I/11.9	925 372 500 2I/11.5	1 156 465 700 2I/11.5	1 403 581 000 2I/11.8	11.2	1800	
	10	4.23 1 710 2I/10.2	7.76 3 280 2I/10.7	8.43 3 720 2I/11.2	15.7 6 380 2I/10.3	18.5 7 500 2I/10.3	33.2 13 400 2I/10.2	65.2 27 550 2I/10.7	88.9 35 750 2I/10.2	158 63 900 2I/10.3	198 83 150 2I/10.7	283 114 000 2I/10.2	380 149 100 2I/9.95	538 227 300 2I/10.7	718 294 500 2I/10.4	986 400 000 2I/10.3	1 233 500 000 2I/10.3	1 401 589 200 2I/10.7	10	1600	
	9	–	–	–	–	–	–	–	81 33 600 2I/9.22	128 53 150 2I/9.24	147 61 450 2I/9.31	290 115 600 2I/8.85	353 141 200 2I/8.88	525 217 400 2I/9.19	678 281 600 2I/9.22	939 390 800 2I/9.24	1 174 488 500 2I/9.24	1 349 565 200 2I/9.31	9	1400	
	8	3.86 1 560 2I/8.01	7.82 3 260 2I/8.26	9.78 3 940 2I/7.99	16.6 6 720 2I/8.03	20.5 8 280 2I/8.03	33.4 13 450 2I/8.01	66.2 27 550 2I/8.26	–	132 53 350 2I/8.03	–	283 114 200 2I/8.01	–	525 218 700 2I/8.26	–	944 382 100 2I/8.03	1 176 476 300 2I/8.03	–	8	1250	
	6.3	3.22 1 300 2I/6.42	6.69 2 760 2I/6.53	8.36 3 620 2I/6.86	13.4 5 410 2I/6.41	16.7 6 760 2I/6.41	33.1 13 400 2I/6.42	52.3 21 550 2I/6.53	–	107 43 150 2I/6.41	–	244 98 800 2I/6.42	–	481 198 100 2I/6.53	–	839 339 300 2I/6.41	982 397 000 2I/6.41	–	6.3	1000	
	5	–	6.77 2 670 I/5	–	12.6 5 160 I/5.2	–	29 11 000 I/4.82	56.8 22 350 I/5	76.7 30 250 I/5	124 48 150 I/4.92	161 64 200 I/5.07	251 97 200 I/4.92	310 123 900 I/5.07	436 174 300 I/5.08	629 247 800 I/5	850 329 700 I/4.92	1 062 412 100 I/4.92	1 191 476 000 I/5.07	5	800	
	4.5	–	–	–	–	–	–	57.7 22 800 I/4.45	80.4 32 100 I/4.5	130 52 000 I/4.5	168 69 750 I/4.67	258 103 000 I/4.5	327 135 600 I/4.67	507 201 200 I/4.47	616 246 200 I/4.5	849 339 300 I/4.5	1 062 424 200 I/4.5	1 178 480 900 I/4.6	4.5	710	
	4	–	7.57 3 030 I/4	–	15.1 6 300 I/4.16	–	31.6 12 400 I/3.92	62 24 850 I/4	89.4 36 450 I/4.08	133 55 100 I/4.13	183 76 000 I/4.15	268 111 000 I/4.13	359 146 300 I/4.07	474 189 600 I/4	677 276 000 I/4.08	867 352 600 I/4.07	1 083 440 700 I/4.07	1 171 468 800 I/4	4	630	
	3.55	–	–	–	–	–	–	66.6 27 100 I/3.62	93.8 38 450 I/3.64	138 56 200 I/3.62	180 73 000 I/3.6	275 110 700 I/3.57	351 145 000 I/3.67	498 202 800 I/3.62	638 261 500 I/3.64	863 340 000 I/3.5	1 079 425 000 I/3.5	1 155 468 200 I/3.6	3.55	560	
1 800 000	100	–	–	–	–	–	10 300 3I/103	20 600 3I/101	30 000 3I/100	45 000 3I/107	65 000 3I/108	92 500 3I/100	128 000 3I/98.5	185 000 3I/98.5	249 400 3I/100	325 000 3I/105	387 000 3I/105	432 200 3I/103			
	90	–	–	–	–	–	–	–	32 500 3I/89.4	47 500 3I/93.7	63 000 3I/93.3	97 500 3I/86.4	136 000 3I/88.8	195 000 3I/89	230 500 3I/89.7	313 000 3I/90.1	391 200 3I/90.1	439 300 3I/92.7			
	80	–	2120 3I/75.2	2570 3I/78.2	4 530 3I/82.7	5150 3I/82.7	9 500 3I/75.5	19 000 3I/75.3	31 500 3I/81.4	47 500 3I/85.7	67 000 3I/86.1	97 500 3I/84	136 000 3I/82.7	195 000 3I/82.7	250 000 3I/84.3	335 000 3I/82.5	412 000 3I/82.5	438 700 3I/81.1			
	71	–	–	–	–	–	–	–	33 500 3I/72.8	50 000 3I/74.9	71 050 3I/74.6	103 000 3I/72.6	145 000 3I/74.5	206 000 3I/74.7	231 400 3I/75.3	311 500 3I/71	389 300 3I/71	462 900 3I/73			
	63	–	2570 3I/60.1	3150 3I/62.6	5 380 3I/66.3	6 330 3I/66.3	11 500 3I/61.5	23 000 3I/60.2	33 500 3I/62	50 000 3I/63.5	71 000 3I/63.8	103 000 3I/62.6	145 000 3I/61.7	206 000 3I/61.5	241 900 3I/62.7	348 600 3I/67.1	435 800 3I/67.1	462 700 3I/66			
	56	–	–	–	–	–	–	–	35 500 3I/55.4	53 000 3I/55.5	73 700 3I/55.3	109 000 3I/54.1	155 200 3I/55.5	222 200 3I/55.6	245 700 3I/56	311 500 3I/57.8	388 500 3I/57.8	491 500 3I/59.4			
	50	–	2720 3I/49.4	3450 3I/51.5	5800 3I/49.8	6900 3I/49.8	12 200 3I/51.2	23 350 3I/49.5	35 500 3I/50.4	53 000 3I/50.8	77 700 3I/51	109 000 3I/52.6	150 000 3I/51.8	218 000 3I/51.7	245 400 3I/52.7	347 800 3I/52.9	434 700 3I/52.9	490 700 3I/52			
	45	–	–	–	–	–	–	–	37 850 3I/45.1	56 000 3I/44.4	73 850 3I/44.2	115 000 3I/45.4	162 500 3I/46.6	223 200 3I/46.7	259 200 3I/47.1	328 500 3I/45.5	408 800 3I/45.5	518 300 3I/46.8			

For n_1 lower than 560 rpm see page 107.
▲ Possible forced lubrication with heat exchanger: consult us.

$n_{N2} \cdot L_h$ rpm · h	i_N	Nominal output power P_{N2} [hp] / Nominal output torque T_{N2} [lb in] / Train of gears / ratio ... / i																	i_N	n_1 rpm	n_{N2}
		50	63	64	80	81	100	125	140	160	180	200	225	250	280	320	321	360			
1 800 000	40	–	2900 3I/40.8	3 290 3I/42.5	5 390 3I/43.6	6 340 3I/43.6	12 800 3I/39.1	23 700 3I/40.8	33 650 3I/38.7	58 000 3I/38.5	69 050 3I/39.9	118 000 3I/41.5	145 800 3I/40.4	210 100 3I/42.4	266 300 3I/41.2	337 500 3I/40.7	420 000 3I/40.7	532 500 3I/42.3			
	35.5	–	–	–	–	–	–	–	33 800 3I/37.5	58 750 3I/36.5	68 450 3I/36.3	117 500 3I/34.4	136 900 3I/35.4	212 900 3I/36.9	269 900 3I/37.2	342 100 3I/37.4	425 800 3I/37.4	539 800 3I/38.4			
	31.5	–	2800 3I/33.5	3150 3I/34.9	6 390 3I/32.8	7100 3I/32.8	12 200 3I/32.6	20 800 3I/33.5	31 450 3I/32.2	52 550 3I/31.6	65 350 3I/32.8	110 900 3I/31.5	138 600 3I/30.6	199 700 3I/33.5	273 300 3I/32.5	346 500 3I/33.5	431 100 3I/33.5	546 600 3I/34.7			
	28	–	–	–	–	–	10 000 2I/28.8	–	28 800 3I/29.1	49 200 3I/28.4	57 750 3I/28.6	99 950 3I/27.2	129 700 3I/27.3	200 700 3I/28.7	259 300 3I/28.8	351 400 3I/30	437 300 3I/30	532 300 3I/30.3			
	25	1 110 2I/24.4	2 560 2I/24.1	3 010 2I/25.1	4 530 2I/26	5 330 2I/26	11 550 2I/23.7	22 000 2I/24.1	30 850 2I/24.1	48 350 2I/24.6	70 200 2I/25.4	97 500 2I/24.2	140 600 2I/25	200 800 2I/25	269 800 2I/24.6	290 400 2I/25	413 800 2I/25	515 900 2I/25.7			
	22.4	–	–	–	–	–	–	–	35 450 2I/21.7	55 100 2I/22.5	77 850 2I/23.3	105 200 2I/22.2	150 600 2I/23	204 600 2I/22	263 400 2I/22.2	323 100 2I/22.8	426 000 2I/22.8	522 600 2I/23.4			
	20	2.86 1 290 2I/20.1	7.26 3 150 2I/19.3	7.27 3 280 2I/20.1	11.5 5 390 2I/20.8	13.5 6 330 2I/20.8	30.9 13 450 2I/19.3	60.7 26 350 2I/19.3	86.8 38 400 2I/19.6	124 57 700 2I/20.7	166 77 800 2I/20.8	250 114 500 2I/20.3	334 150 500 2I/20	518 229 700 2I/19.7	629 284 100 2I/20.1	– 347 600 2I/20.6	– 478 600 2I/20.6	– 574 300 2I/20.3	20	2800	**140**
	18	–	–	–	–	–	–	–	90.7 40 150 2I/17.6	138 62 800 2I/18.1	171 77 500 2I/18	267 118 500 2I/17.6	330 150 100 2I/18.1	524 234 900 2I/17.8	632 285 800 2I/17.9	– 369 700 2I/17.8	– 462 100 2I/17.8	– 568 200 2I/18.3	18	2500	
	16	3.32 1 530 2I/16.3	7.07 3150 2I/15.8	8.01 3 730 2I/16.5	14.4 6 360 2I/15.7	17.1 7 520 2I/15.7	31.1 14 100 2I/16.1	59.5 26 550 2I/15.8	85.7 36 350 2I/15.1	145 64 100 2I/15.7	166 77 800 2I/16.6	265 119 800 2I/16.1	345 151 700 2I/15.6	513 233 600 2I/16.2	610 269 200 2I/15.7	– 405 000 2I/15.9	– 506 200 2I/15.9	– 571 900 2I/16	16	2240	
	14	–	–	–	–	–	–	–	76.7 35 500 2I/14.7	142 63 050 2I/14.1	189 85 600 2I/14.4	276 121 000 2I/13.9	323 148 900 2I/14.6	446 204 900 2I/14.6	581 269 200 2I/14.7	836 376 100 2I/14.3	1 045 470 100 2I/14.3	1 279 580 200 2I/14.4	14	2000	
	12.5	3.54 1 520 2I/12.3	6.9 3 160 2I/13.1	6.9 3 290 2I/13.6	11.7 5 610 2I/13.7	13.5 6 490 2I/13.7	31.2 13 400 2I/12.3	57.7 26 400 2I/13.1	82.5 38 450 2I/13.3	121 57 750 2I/13.6	163 77 850 2I/13.6	252 114 500 2I/13	331 148 000 2I/12.8	502 229 900 2I/13.1	621 289 600 2I/13.3	764 357 300 2I/13.4	1 028 480 900 2I/13.4	1 252 576 000 2I/13.1	12.5	1800	
	11.2	–	–	–	–	–	–	–	85.8 40 200 2I/11.9	134 62 850 2I/11.9	184 85 650 2I/11.8	265 116 700 2I/11.2	329 149 100 2I/11.5	506 235 200 2I/11.8	628 294 500 2I/11.9	825 373 900 2I/11.5	1 032 467 400 2I/11.5	1 264 589 200 2I/11.8	11.2	1600	
	10	3.72 1 710 2I/10.2	6.93 3350 2I/10.7	7.41 3 730 2I/11.2	13.8 6 400 2I/10.3	16.3 7 530 2I/10.3	30.3 13 950 2I/10.2	59.4 28 700 2I/10.7	81 37 200 2I/10.2	138 64 200 2I/10.3	180 86 550 2I/10.7	258 118 700 2I/10.2	338 151 500 2I/9.95	490 236 600 2I/10.7	638 299 200 2I/10.4	898 416 400 2I/10.3	1 123 520 500 2I/10.3	1 245 598 700 2I/10.7	10	1400	
	9	–	–	–	–	–	–	–	74.8 34 800 2I/9.22	115 53 500 2I/9.24	132 61 850 2I/9.31	268 119 600 2I/8.85	326 146 000 2I/8.88	472 218 700 2I/9.19	609 283 400 2I/9.22	868 404 300 2I/9.24	1 085 505 400 2I/9.24	1 212 568 900 2I/9.31	9	1250	
	8	3.58 1 610 2I/8.01	7.24 3 370 2I/8.26	9.06 4 070 2I/7.99	14.9 6 750 2I/8.03	18.4 8 310 2I/8.03	30.9 13 900 2I/8.01	61.3 28 500 2I/8.26	–	119 53 700 2I/8.03	–	262 118 100 2I/8.01	–	473 220 000 2I/8.26	–	851 384 500 2I/8.03	1 060 479 100 2I/8.03	–	8	1120	
	6.3	2.91 1 310 2I/6.42	6.22 2 840 2I/6.53	7.59 3 650 2I/6.86	12.1 5 420 2I/6.41	15.1 6 780 2I/6.41	29.4 13 200 2I/6.42	47.3 21 650 2I/6.53	–	96.7 43 450 2I/6.41	–	221 99 350 2I/6.42	–	435 199 200 2I/6.53	–	762 342 300 2I/6.41	889 399 300 2I/6.41	–	6.3	900	
	5	–	6.03 2 680 I/5	–	11.2 5 180 I/5.2	–	25.8 11 050 I/4.82	50.6 22 450 I/5	68.1 30 250 I/5	111 48 350 I/4.92	143 64 200 I/5.07	223 97 550 I/4.92	275 123 900 I/5.07	401 180 700 I/5.08	558 247 800 I/5	757 330 900 I/4.92	946 413 600 I/4.92	1 096 493 400 I/5.07	5	710	
	4.5	–	–	–	–	–	–	51.4 22 900 I/4.45	71.3 32 100 I/4.5	116 52 200 I/4.5	149 69 750 I/4.67	229 103 000 I/4.5	291 135 600 I/4.67	452 201 900 I/4.47	567 255 200 I/4.5	757 340 600 I/4.5	946 425 800 I/4.5	1 083 498 500 I/4.6	4.5	630	

For n_1 lower than 560 rpm see page 107.

$n_{N2} \cdot L_h$ rpm · h	i_N	50	63	64	80	81	100	125	140	160	180	200	225	250	280	320	321	360	i_N	n_1 rpm	n_{N2}
		Nominal output power P_{N2} [hp] Nominal output torque T_{N2} [lb in] Train of gears / ratio ... / i																			
1 800 000	4		6.73 3 030 I/4	–	13.4 6 300 I/4.16	–	28.1 12 400 I/3.92	55.4 24 900 I/4	79.5 36 500 I/4.08	119 55 350 I/4.13	163 76 250 I/4.15	239 111 400 I/4.13	331 151 600 I/4.07	436 196 400 I/4	623 285 900 I/4.08	798 365 200 I/4.07	997 456 600 I/4.07	1 079 485 700 I/4	4	560	**140**
1 600 000	100	–	–	–	–	–	10 600 3I/103	21 200 3I/101	31 500 3I/100	46 200 3I/107	67 000 3I/108	95 000 3I/100	132 000 3I/98.5	190 000 3I/98.5	258 000 3I/100	325 000 3I/105	400 000 3I/105	447 100 3I/103			
	90	–	–	–	–	–	–	–	32 500 3I/89.4	48 700 3I/93.7	65 000 3I/93.3	100 000 3I/86.4	140 000 3I/88.8	200 000 3I/89	238 300 3I/89.7	323 500 3I/90.1	404 300 3I/90.1	451 400 3I/92.7			
	80	–	2180 3I/75.2	2650 3I/78.2	4 550 3I/82.7	5 350 3I/82.7	9 750 3I/75.5	19 500 3I/75.3	32 500 3I/81.4	48 700 3I/85.7	69 000 3I/86.1	100 000 3I/84	140 000 3I/82.7	200 000 3I/82.7	258 700 3I/84.3	345 000 3I/82.5	425 000 3I/82.5	449 800 3I/81.1			
	71	–	–	–	–	–	–	–	34 500 3I/72.8	51 500 3I/74.9	73 350 3I/74.6	106 000 3I/72.6	145 000 3I/74.5	212 000 3I/74.7	238 500 3I/75.3	321 500 3I/71	401 800 3I/71	476 100 3I/73			
	63	–	2650 3I/60.1	3 290 3I/62.6	5 400 3I/66.3	6 350 3I/66.3	11 800 3I/61.5	23 600 3I/60.2	34 500 3I/62	51 500 3I/63.5	73 000 3I/63.8	106 000 3I/62.6	150 000 3I/61.7	212 000 3I/61.5	250 600 3I/62.7	361 100 3I/67.1	451 400 3I/67.1	477 600 3I/66			
	56	–	–	–	–	–	–	–	36 500 3I/55.4	54 500 3I/55.5	73 950 3I/55.3	112 000 3I/54.1	155 000 3I/55.5	224 000 3I/55.6	252 500 3I/56	322 200 3I/57.8	402 700 3I/57.8	504 900 3I/59.4			
	50	–	2800 3I/49.4	3550 3I/51.5	6000 3I/49.8	7100 3I/49.8	12 500 3I/51.2	24 200 3I/49.5	36 500 3I/50.4	54 500 3I/50.8	78 000 3I/51	112 000 3I/52.6	155 000 3I/51.8	224 000 3I/51.7	251 900 3I/52.7	360 500 3I/52.9	450 600 3I/52.9	503 700 3I/52			
	45	–	–	–	–	–	–	–	39 200 3I/45.1	58 000 3I/44.4	76 500 3I/44.2	118 000 3I/45.4	168 300 3I/46.6	231 200 3I/46.7	266 300 3I/47.1	337 500 3I/45.5	420 000 3I/45.5	532 500 3I/46.8			
	40	–	2900 3I/40.8	3 300 3I/42.5	5 410 3I/43.6	6 360 3I/43.6	12 800 3I/39.1	24 500 3I/40.8	34 800 3I/38.7	58 000 3I/38.5	71 450 3I/39.9	118 000 3I/41.5	150 900 3I/40.4	217 400 3I/42.4	269 900 3I/41.2	342 100 3I/40.7	425 800 3I/40.7	539 800 3I/42.3			
	35.5	–	–	–	–	–	–	–	34 850 3I/37.5	60 000 3I/36.5	69 300 3I/36.3	121 200 3I/34.4	138 600 3I/35.4	219 800 3I/36.9	273 300 3I/37.2	346 500 3I/37.4	431 100 3I/37.4	546 600 3I/38.4			
	31.5	–	2900 3I/33.5	3150 3I/34.9	6 420 3I/32.8	7100 3I/32.8	12 200 3I/32.6	21 550 3I/33.5	31 900 3I/32.2	54 450 3I/31.6	66 250 3I/32.8	114 900 3I/31.5	140 500 3I/30.6	206 900 3I/33.5	277 200 3I/32.5	351 400 3I/33.5	437 300 3I/33.5	554 400 3I/34.7			
	28	–	–	–	–	–	10 300 2I/28.8	–	29 250 3I/29.1	49 900 3I/28.4	58 600 3I/28.6	102 900 3I/27.2	131 600 3I/27.3	203 500 3I/28.7	263 000 3I/28.8	356 400 3I/30	443 500 3I/30	539 900 3I/30.3			
	25	1 110 2I/24.4	2 570 2I/24.1	3 020 2I/25.1	4 600 2I/26	5 350 2I/26	11 600 2I/23.7	22 100 2I/24.1	30 950 2I/24.1	48 500 2I/24.6	70 450 2I/25.4	97 850 2I/24.2	141 100 2I/25	201 600 2I/25	270 800 2I/24.6	294 600 2I/25	415 400 2I/25	534 700 2I/25.7			
	22.4	–	–	–	–	–	–	–	72.9 35 600 2I/21.7	109 55 350 2I/22.5	149 78 150 2I/23.3	212 105 600 2I/22.2	296 152 800 2I/23	415 205 400 2I/22	547 272 900 2I/22.2	– 327 700 2I/22.8	– 427 500 2I/22.8	– 541 400 2I/23.4	22.4	2800	**125**
	20	2.56 1 300 2I/20.1	6.51 3 160 2I/19.3	6.51 3 300 2I/20.1	10.4 5 460 2I/20.8	12.1 6 350 2I/20.8	27.7 13 500 2I/19.3	54.4 26 450 2I/19.3	77.8 38 550 2I/19.6	111 57 900 2I/20.7	149 78 050 2I/20.8	224 114 900 2I/20.3	308 155 700 2I/20	464 230 500 2I/19.7	581 293 900 2I/20.1	– 352 300 2I/20.6	– 495 200 2I/20.6	– 594 100 2I/20.3	20	2500	
	18	–	–	–	–	–	–	–	81.5 40 250 2I/17.6	124 63 000 2I/18.1	153 77 500 2I/18	247 122 100 2I/17.6	305 155 100 2I/18.1	471 235 800 2I/17.8	574 289 600 2I/17.9	– 375 100 2I/17.8	– 468 800 2I/17.8	– 581 600 2I/18.3	18	2240	
	16	2.97 1 530 2I/16.3	6.51 3250 2I/15.8	7.18 3 740 2I/16.5	12.9 6 380 2I/15.7	15.3 7 550 2I/15.7	27.6 14 000 2I/16.1	55 27 450 2I/15.8	76.8 36 450 2I/15.1	130 64 300 2I/15.7	149 78 050 2I/16.6	245 124 000 2I/16.1	318 156 900 2I/15.6	474 241 700 2I/16.2	552 272 900 2I/15.7	836 419 000 2I/15.9	1 045 523 700 2I/15.9	1 173 591 700 2I/16	16	2000	

For n_1 lower than 560 rpm see page 107.

$n_{N2} \cdot L_h$ rpm · h	i_N	50	63	64	80	81	100	125	140	160	180	200	225	250	280	320	321	360	i_N	n_1 rpm	n_{N2}
		Nominal output power P_{N2} [hp] Nominal output torque T_{N2} [lb in] Train of gears / ratio ... / i																			
1 600 000	14	–	–	–	–	–	–	–	69.2 35 650 2I/14.7	129 63 300 2I/14.1	170 85 900 2I/14.4	257 124 900 2I/13.9	298 152 800 2I/14.6	402 205 600 2I/14.6	540 277 900 2I/14.7	776 388 100 2I/14.3	970 485 200 2I/14.3	1 166 587 900 2I/14.4	14	1800	125
	12.5	3.16 1 530 2I/12.3	6.16 3 170 2I/13.1	6.16 3 300 2I/13.6	10.6 5 690 2I/13.7	12.2 6 590 2I/13.7	27.8 13 450 2I/12.3	51.5 26 500 2I/13.1	73.6 38 600 2I/13.3	108 57 950 2I/13.6	145 78 100 2I/13.6	225 114 900 2I/13	305 153 300 2I/12.8	448 230 800 2I/13.1	570 299 100 2I/13.3	688 362 400 2I/13.4	944 497 100 2I/13.4	1 153 596 700 2I/13.1	12.5	1600	
	11.2	–	–	–	–	–	–	–	75.4 40 400 2I/11.9	118 63 100 2I/11.9	162 86 050 2I/11.8	241 121 400 2I/11.2	297 153 600 2I/11.5	444 236 200 2I/11.8	559 299 200 2I/11.9	733 379 700 2I/11.5	914 473 300 2I/11.5	1 124 598 700 2I/11.8	11.2	1400	
	10	3.33 1 720 2I/10.2	6.19 3350 2I/10.7	6.64 3 750 2I/11.2	12.4 6 430 2I/10.3	14.6 7 560 2I/10.3	28 14 450 2I/10.2	54.7 29 600 2I/10.7	74.8 38 500 2I/10.2	124 64 400 2I/10.3	163 87 500 2I/10.7	238 122 800 2I/10.2	309 155 100 2I/9.95	452 244 800 2I/10.7	574 301 200 2I/10.4	819 425 100 2I/10.3	1 024 531 400 2I/10.3	1 119 602 600 2I/10.7	10	1250	
	9	–	–	–	–	–	–	–	67.4 34 950 2I/9.22	104 53 850 2I/9.24	119 62 250 2I/9.31	248 123 600 2I/8.85	302 150 900 2I/8.88	425 220 000 2I/9.19	549 285 100 2I/9.22	803 417 800 2I/9.24	1 004 522 300 2I/9.24	1 093 572 500 2I/9.31	9	1120	
	8	3.3 1 670 2I/8.01	6.58 3 430 2I/8.26	8.36 4 210 2I/7.99	13.4 6 770 2I/8.03	16.5 8 340 2I/8.03	28.5 14 400 2I/8.01	56.6 29 450 2I/8.26	–	107 54 050 2I/8.03	–	242 122 100 2I/8.01	–	425 221 300 2I/8.26	–	764 387 000 2I/8.03	952 482 000 2I/8.03	–	8	1000	
	6.3	2.6 1 310 2I/6.42	5.72 2 950 2I/6.53	6.75 3 650 2I/6.86	10.8 5 440 2I/6.41	13.5 6 810 2I/6.41	26.1 13 200 2I/6.42	42.3 21 800 2I/6.53	–	86.5 43 700 2I/6.41	–	198 99 950 2I/6.42	–	389 200 400 2I/6.53	–	684 345 600 2I/6.41	795 402 000 2I/6.41	–	6.3	800	
	5	–	5.37 2 690 I/5	–	9.99 5 200 I/5.2	–	23 11 100 I/4.82	45.1 22 550 I/5	60.4 30 250 I/5	98.5 48 500 I/4.92	127 64 200 I/5.07	199 97 900 I/4.92	244 123 900 I/5.07	369 187 300 I/5.08	495 247 800 I/5	674 332 100 I/4.92	843 415 200 I/4.92	1 008 511 400 I/5.07	5	630	
	4.5	–	–	–	–	–	–	45.8 23 000 I/4.45	63.4 32 100 I/4.5	103 52 400 I/4.5	133 69 750 I/4.67	203 103 000 I/4.5	258 135 600 I/4.67	403 202 700 I/4.47	522 264 400 I/4.5	675 341 900 I/4.5	844 427 300 I/4.5	997 516 400 I/4.6	4.5	560	
1 400 000	125	–	–	–	–	–	10 300 3I/123	20 600 3I/123	26 500 3I/123	38 700 3I/128	54 500 3I/131	80 000 3I/119	109 000 3I/123	160 000 3I/125	218 000 3I/123	272 000 3I/127	335 000 3I/127	437 000 3I/131			
	100	–	–	–	–	–	10 900 3I/103	21 800 3I/101	31 500 3I/100	47 500 3I/107	67 000 3I/108	97 500 3I/100	136 000 3I/98.5	195 000 3I/98.5	266 600 3I/100	335 000 3I/105	412 000 3I/105	462 100 3I/103			
	90	–	–	–	–	–	–	–	33 500 3I/89.4	50 000 3I/93.7	67 000 3I/93.3	103 000 3I/86.4	145 000 3I/88.8	206 000 3I/89	246 500 3I/89.7	334 700 3I/90.1	418 300 3I/90.1	462 900 3I/92.7			
	80	–	2240 3I/75.2	2720 3I/78.2	4 570 3I/82.7	5 370 3I/82.7	10 000 3I/75.5	20 000 3I/75.3	33 500 3I/81.4	50 000 3I/85.7	71 000 3I/86.1	103 000 3I/84	145 000 3I/82.7	206 000 3I/82.7	267 000 3I/84.3	355 000 3I/82.5	437 000 3I/82.5	462 700 3I/81.1			
	71	–	–	–	–	–	–	–	35 500 3I/72.8	53 000 3I/74.9	76 000 3I/74.6	109 000 3I/72.6	150 000 3I/74.5	218 000 3I/74.7	247 100 3I/75.3	333 000 3I/71	416 300 3I/71	491 500 3I/73			
	63	–	2720 3I/60.1	3 310 3I/62.6	5 420 3I/66.3	6 370 3I/66.3	12 200 3I/61.5	24 300 3I/60.2	35 500 3I/62	53 000 3I/63.5	75 000 3I/63.8	109 000 3I/62.6	150 000 3I/61.7	218 000 3I/61.5	259 700 3I/62.7	374 300 3I/67.1	467 900 3I/67.1	490 700 3I/66			
	56	–	–	–	–	–	–	–	36 500 3I/55.4	56 000 3I/55.5	74 250 3I/55.3	115 000 3I/54.1	160 000 3I/55.5	230 000 3I/55.6	259 200 3I/56	333 900 3I/57.8	417 400 3I/57.8	518 300 3I/59.4			
	50	–	2900 3I/49.4	3650 3I/51.5	6150 3I/49.8	7300 3I/49.8	12 800 3I/51.2	25 050 3I/49.5	37 500 3I/50.4	56 000 3I/50.8	78 300 3I/51	115 400 3I/52.6	160 000 3I/51.8	231 700 3I/51.7	260 700 3I/52.7	373 400 3I/52.9	466 800 3I/52.9	517 500 3I/52			
	45	–	–	–	–	–	–	–	40 000 3I/45.1	58 000 3I/44.4	79 150 3I/44.2	118 000 3I/45.4	165 000 3I/46.6	237 000 3I/46.7	269 900 3I/47.1	342 100 3I/45.5	425 800 3I/45.5	539 800 3I/46.8			

For n_1 lower than 560 rpm see page 107.

$n_{N2} \cdot L_h$ rpm · h	i_N	Nominal output power P_{N2} [hp] / Nominal output torque T_{N2} [lb in] / Train of gears / ratio ... / i																	i_N	n_1 rpm	n_{N2}
		50	63	64	80	81	100	125	140	160	180	200	225	250	280	320	321	360			
1 400 000	40	–	3000 3I/40.8	3 310 3I/42.5	5 420 3I/43.6	6 380 3I/43.6	13 200 3I/39.1	25 300 3I/40.8	35 900 3I/38.7	60 000 3I/38.5	73 750 3I/39.9	122 000 3I/41.5	155 700 3I/40.4	224 400 3I/42.4	273 300 3I/41.2	346 500 3I/40.7	431 100 3I/40.7	546 600 3I/42.3			
	35.5	–	–	–	–	–	–	–	36 100 3I/37.5	60 000 3I/36.5	70 250 3I/36.3	122 500 3I/34.4	143 300 3I/35.4	227 700 3I/36.9	277 200 3I/37.2	351 400 3I/37.4	437 300 3I/37.4	554 400 3I/38.4			
	31.5	–	2900 3I/33.5	3250 3I/34.9	6 450 3I/32.8	7300 3I/32.8	12 500 3I/32.6	22 300 3I/33.5	32 350 3I/32.2	56 450 3I/31.6	67 200 3I/32.8	119 100 3I/31.5	142 600 3I/30.6	214 500 3I/33.5	281 200 3I/32.5	356 400 3I/33.5	443 500 3I/33.5	562 300 3I/34.7			
	28	–	–	–	–	–	10 600 2I/28.8	–	30 050 3I/29.1	50 600 3I/28.4	59 450 3I/28.6	106 700 3I/27.2	133 500 3I/27.3	206 500 3I/28.7	266 800 3I/28.8	361 500 3I/30	449 900 3I/30	547 700 3I/30.3			
	25	2.03 1 120 2I/24.4	4.75 2 580 2I/24.1	5.37 3 030 2I/25.1	7.97 4 660 2I/26	9.21 5 390 2I/26	21.8 11 650 2I/23.7	40.9 22 150 2I/24.1	57.3 31 050 2I/24.1	87.9 48 700 2I/24.6	124 70 700 2I/25.4	180 98 250 2I/24.2	252 141 600 2I/25	360 202 300 2I/25	491 271 800 2I/24.6	– 298 800 2I/25	– 416 900 2I/25	– 553 900 2I/25.7	25	2800	**112**
	22.4	–	–	–	–	–	–	–	65.3 35 700 2I/21.7	97.9 55 550 2I/22.5	133 78 400 2I/23.3	190 105 900 2I/22.2	265 153 400 2I/23	372 206 100 2I/22	506 282 400 2I/22.2	– 332 200 2I/22.8	– 429 100 2I/22.8	– 560 100 2I/23.4	22.4	2500	
	20	2.3 1 300 2I/20.1	5.85 3 170 2I/19.3	5.85 3 310 2I/20.1	9.44 5 530 2I/20.8	10.9 6 400 2I/20.8	24.9 13 500 2I/19.3	48.9 26 550 2I/19.3	70 38 650 2I/19.6	99.9 58 100 2I/20.7	134 78 350 2I/20.8	201 115 300 2I/20.3	285 161 000 2I/20	417 231 300 2I/19.7	531 299 800 2I/20.1	– 357 000 2I/20.6	– 498 700 2I/20.6	– 614 000 2I/20.3	20	2240	
	18	–	–	–	–	–	–	–	73.1 40 400 2I/17.6	111 63 250 2I/18.1	142 80 750 2I/18	221 122 600 2I/17.6	282 160 500 2I/18.1	422 236 600 2I/17.8	519 293 500 2I/17.9	672 376 400 2I/17.8	840 470 500 2I/17.8	1 045 601 700 2I/18.3	18	2000	
	16	2.69 1 540 2I/16.3	5.86 3250 2I/15.8	6.48 3 750 2I/16.5	11.7 6 400 2I/15.7	13.8 7 570 2I/15.7	25.7 14 500 2I/16.1	51.1 28 350 2I/15.8	69.4 36 600 2I/15.1	118 64 550 2I/15.7	135 78 300 2I/16.6	227 128 000 2I/16.1	296 162 000 2I/15.6	437 247 700 2I/16.2	503 276 400 2I/15.7	765 426 100 2I/15.9	956 532 600 2I/15.9	1 090 610 700 2I/16	16	1800	
	14	–	–	–	–	–	–	–	61.8 35 750 2I/14.7	115 63 500 2I/14.1	152 86 200 2I/14.4	234 128 400 2I/13.9	266 153 300 2I/14.6	359 206 400 2I/14.6	497 287 900 2I/14.7	715 402 100 2I/14.3	894 502 600 2I/14.3	1 074 609 100 2I/14.4	14	1600	
	12.5	2.77 1 540 2I/12.3	5.41 3 180 2I/13.1	5.46 3 340 2I/13.6	9.38 5 780 2I/13.7	10.9 6 690 2I/13.7	24.4 13 550 2I/12.3	45.2 26 600 2I/13.1	64.7 38 750 2I/13.3	95.2 58 200 2I/13.6	128 78 450 2I/13.6	198 115 400 2I/13	278 159 600 2I/12.8	394 231 700 2I/13.1	501 300 400 2I/13.3	612 368 200 2I/13.4	830 499 200 2I/13.4	1 050 621 100 2I/13.1	12.5	1400	
	11.2	–	–	–	–	–	–	–	67.5 40 500 2I/11.9	106 63 350 2I/11.9	145 86 350 2I/11.8	217 122 700 2I/11.2	274 158 900 2I/11.5	398 237 000 2I/11.8	502 301 200 2I/11.9	659 382 100 2I/11.5	821 476 300 2I/11.5	1 037 618 700 2I/11.8	11.2	1250	
	10	3 1 730 2I/10.2	5.67 3 430 2I/10.7	5.97 3 760 2I/11.2	11.1 6 450 2I/10.3	13.1 7 590 2I/10.3	25.9 14 900 2I/10.2	49.2 29 700 2I/10.7	67.3 38 700 2I/10.2	112 64 650 2I/10.3	146 87 500 2I/10.7	220 126 900 2I/10.2	286 160 300 2I/9.95	411 248 200 2I/10.7	517 303 100 2I/10.4	736 426 600 2I/10.3	920 533 300 2I/10.3	1 009 606 400 2I/10.7	10	1120	
	9	–	–	–	–	–	–	–	60.1 34 950 2I/9.22	93 54 150 2I/9.24	107 62 650 2I/9.31	229 127 800 2I/8.85	279 156 200 2I/8.88	387 224 100 2I/9.19	493 286 900 2I/9.22	742 432 300 2I/9.24	928 540 400 2I/9.24	982 576 100 2I/9.31	9	1000	
	8	3.07 1 720 2I/8.01	5.92 3 430 2I/8.26	7.68 4 300 2I/7.99	12.1 6 790 2I/8.03	14.9 8 370 2I/8.03	26.5 14 850 2I/8.01	51.8 30 000 2I/8.26	–	96.7 54 400 2I/8.03	–	225 126 100 2I/8.01	–	385 222 500 2I/8.26	–	692 389 200 2I/8.03	862 484 800 2I/8.03	–	8	900	
	6.3	2.31 1 320 2I/6.42	5.26 3 050 2I/6.53	5.99 3 650 2I/6.86	9.6 5 470 2I/6.41	12 6 830 2I/6.41	23.2 13 200 2I/6.42	37.8 21 900 2I/6.53	–	76.7 43 700 2I/6.41	–	177 100 600 2I/6.42	–	348 201 600 2I/6.53	–	613 348 900 2I/6.41	711 404 600 2I/6.41	–	6.3	710	
	5	–	4.79 2 700 I/5	–	8.91 5 210 I/5.2	–	20.5 11 100 I/4.82	40.2 22 650 I/5	53.7 30 250 I/5	87.9 48 700 I/4.92	113 64 200 I/5.07	177 98 300 I/4.92	217 123 900 I/5.07	339 194 000 I/5.08	440 247 800 I/5	602 333 400 I/4.92	752 416 700 I/4.92	899 513 300 I/5.07	5	560	
1 250 000	125	–	–	–	–	–	10 600 3I/123	21 200 3I/123	26 500 3I/123	40 000 3I/128	56 000 3I/131	82 500 3I/119	112 000 3I/123	165 000 3I/125	224 000 3I/123	280 000 3I/127	335 000 3I/127	450 000 3I/131			

For n_1 lower than 560 rpm see page 107.

$n_{N2} \cdot L_h$ rpm · h	i_N	50	63	64	80	81	100	125	140	160	180	200	225	250	280	320	321	360	i_N	n_1 rpm	n_{N2}
		Nominal output power P_{N2} [hp] Nominal output torque T_{N2} [lb in] Train of gears / ratio ... / i																			
1 250 000	100	–	–	–	–	–	11 200 3l/103	22 400 3l/101	32 500 3l/100	48 700 3l/107	69 000 3l/108	100 000 3l/100	140 000 3l/98.5	200 000 3l/98.5	275 900 3l/100	345 000 3l/105	425 000 3l/105	478 100 3l/103			
	90	–	–	–	–	–	–	–	34 500 3l/89.4	51 500 3l/93.7	69 000 3l/93.3	106 000 3l/86.4	145 000 3l/88.8	212 000 3l/89	254 400 3l/89.7	345 400 3l/90.1	431 800 3l/90.1	476 100 3l/92.7			
	80	–	2300 3l/75.2	2800 3l/78.2	4 580 3l/82.7	5 390 3l/82.7	10 300 3l/75.5	20 600 3l/75.3	34 500 3l/81.4	51 500 3l/85.7	73 000 3l/86.1	106 000 3l/84	150 000 3l/82.7	212 000 3l/82.7	276 600 3l/84.3	365 000 3l/82.5	450 000 3l/82.5	477 600 3l/81.1			
	71	–	–	–	–	–	–	–	36 500 3l/72.8	54 500 3l/74.9	78 750 3l/74.6	112 000 3l/72.6	155 000 3l/74.5	224 000 3l/74.7	256 100 3l/75.3	345 200 3l/71	431 400 3l/71	504 900 3l/73			
	63	–	2800 3l/60.1	3 320 3l/62.6	5 440 3l/66.3	6 400 3l/66.3	12 500 3l/61.5	25 000 3l/60.2	36 500 3l/62	54 500 3l/63.5	78 550 3l/63.8	112 000 3l/62.6	155 000 3l/61.7	224 000 3l/61.5	269 200 3l/62.7	388 000 3l/67.1	475 000 3l/67.1	503 700 3l/66			
	56	–	–	–	–	–	–	–	37 500 3l/55.4	58 000 3l/55.5	74 500 3l/55.3	118 000 3l/54.1	165 000 3l/55.5	237 400 3l/55.6	266 300 3l/56	345 900 3l/57.8	432 400 3l/57.8	532 500 3l/59.4			
	50	–	2900 3l/49.4	3 760 3l/51.5	6150 3l/49.8	7500 3l/49.8	12 800 3l/51.2	25 900 3l/49.5	38 850 3l/50.4	58 300 3l/50.8	78 550 3l/51	115 800 3l/52.6	165 300 3l/51.8	232 500 3l/51.7	269 700 3l/52.7	386 300 3l/52.9	482 900 3l/52.9	524 600 3l/52			
	45	–	–	–	–	–	–	–	40 600 3l/45.1	60 000 3l/44.4	81 650 3l/44.2	123 100 3l/45.4	170 000 3l/46.6	237 700 3l/46.7	273 300 3l/47.1	346 500 3l/45.5	431 100 3l/45.5	546 600 3l/46.8			
	40	–	3000 3l/40.8	3 320 3l/42.5	5 440 3l/43.6	6 400 3l/43.6	13 600 3l/39.1	26 200 3l/40.8	37 200 3l/38.7	60 000 3l/38.5	76 400 3l/39.9	122 000 3l/41.5	161 300 3l/40.4	232 400 3l/42.4	277 200 3l/41.2	351 400 3l/40.7	437 300 3l/40.7	554 400 3l/42.3			
	35.5	–	–	–	–	–	–	–	37 450 3l/37.5	61 500 3l/36.5	72 050 3l/36.3	123 000 3l/34.4	148 500 3l/35.4	236 000 3l/36.9	281 200 3l/37.2	356 400 3l/37.4	443 500 3l/37.4	562 300 3l/38.4			
	31.5	–	2900 3l/33.5	3250 3l/34.9	6 470 3l/32.8	7300 3l/32.8	12 500 3l/32.6	23 150 3l/33.5	33 300 3l/32.2	58 500 3l/31.6	68 150 3l/32.8	123 400 3l/31.5	144 600 3l/30.6	222 300 3l/33.5	285 200 3l/32.5	361 500 3l/33.5	449 900 3l/33.5	570 400 3l/34.7			
	28	–	–	–	–	–	16.4 10 650 2l/28.8	–	47.6 31 150 3l/29.1	80.3 51 350 3l/28.4	93.6 60 250 3l/28.6	180 110 500 3l/27.2	220 135 400 3l/27.3	324 209 400 3l/28.7	417 270 500 3l/28.8	542 366 600 3l/30▲	675 456 300 3l/30▲	816 555 400 3l/30.3▲	28	2800	100
	25	1.82 1 120 2l/24.4	4.26 2 590 2l/24.1	4.81 3 040 2l/25.1	7.21 4 730 2l/26	8.33 5 460 2l/26	19.5 11 700 2l/23.7	36.6 22 250 2l/24.1	51.3 31 200 2l/24.1	78.8 48 850 2l/24.6	111 70 950 2l/25.4	161 98 600 2l/24.2	226 142 100 2l/25	322 203 000 2l/25	440 272 800 2l/24.6	– 302 800 2l/25	– 418 400 2l/25	– 573 100 2l/25.7	25	2500	
	22.4	–	–	–	–	–	–	–	58.7 35 850 2l/21.7	88 55 700 2l/22.5	120 78 700 2l/23.3	171 106 300 2l/22.2	238 153 900 2l/23	334 206 800 2l/22	468 291 800 2l/22.2	– 336 600 2l/22.8	– 430 600 2l/22.8	– 578 900 2l/23.4	22.4	2240	
	20	2.06 1 310 2l/20.1	5.24 3 190 2l/19.3	5.25 3 320 2l/20.1	8.54 5 610 2l/20.8	9.89 6 490 2l/20.8	22.3 13 550 2l/19.3	43.8 26 650 2l/19.3	62.7 38 800 2l/19.6	89.6 58 350 2l/20.7	120 78 600 2l/20.8	180 115 700 2l/20.3	261 165 200 2l/20	374 232 100 2l/19.7	476 300 900 2l/20.1	556 361 800 2l/20.6	769 500 500 2l/20.6	993 635 300 2l/20.3	20	2000	
	18	–	–	–	–	–	–	–	66 40 550 2l/17.6	100 63 450 2l/18.1	129 81 000 2l/18	200 123 000 2l/17.6	262 165 600 2l/18.1	381 237 400 2l/17.8	473 297 300 2l/17.9	607 377 700 2l/17.8	759 472 100 2l/17.8	970 621 000 2l/18.3	18	1800	
	16	2.4 1 540 2l/16.3	5.37 3350 2l/15.8	5.78 3 760 2l/16.5	10.4 6 430 2l/15.7	12.3 7 600 2l/15.7	22.9 14 500 2l/16.1	47.1 29 350 2l/15.8	61.9 36 700 2l/15.1	105 64 750 2l/15.7	120 78 600 2l/16.6	203 128 600 2l/16.1	272 167 800 2l/15.6	390 248 600 2l/16.2	453 280 300 2l/15.7	682 427 700 2l/15.9	853 534 600 2l/15.9	1 004 632 600 2l/16	16	1600	
	14	–	–	–	–	–	–	–	54.3 35 900 2l/14.7	101 63 800 2l/14.1	134 86 550 2l/14.4	206 128 900 2l/13.9	234 154 000 2l/14.6	315 207 200 2l/14.6	450 298 000 2l/14.7	651 418 500 2l/14.3	814 523 200 2l/14.3	978 634 000 2l/14.4	14	1400	

For n_1 lower than 560 rpm see page 107.
▲ Possible forced lubrication with heat exchanger: consult us.

$n_{N2} \cdot L_h$ rpm · h	i_N	Nominal output power P_{N2} [hp] / Nominal output torque T_{N2} [lb in] / Train of gears / ratio ... / i																	i_N	n_1 rpm	n_{N2}
		50	**63**	**64**	**80**	**81**	**100**	**125**	**140**	**160**	**180**	**200**	**225**	**250**	**280**	**320**	**321**	**360**			
1 250 000	12.5	2.49 1 540 **2I/12.3**	4.85 3 190 **2I/13.1**	4.89 3 350 **2I/13.6**	8.4 5 800 **2I/13.7**	9.73 6 710 **2I/13.7**	21.9 13 600 **2I/12.3**	40.5 26 700 **2I/13.1**	57.9 38 900 **2I/13.3**	85.3 58 400 **2I/13.6**	114 78 750 **2I/13.6**	177 115 800 **2I/13**	257 165 100 **2I/12.8**	353 232 600 **2I/13.1**	449 301 400 **2I/13.3**	550 370 600 **2I/13.4**	744 501 000 **2I/13.4**	970 642 600 **2I/13.1**	12.5	1250	**100**
	11.2	–	–	–	–	–	–	–	60.7 40 650 **2I/11.9**	95.1 63 550 **2I/11.9**	130 86 650 **2I/11.8**	195 123 100 **2I/11.2**	254 164 200 **2I/11.5**	358 237 900 **2I/11.8**	453 303 100 **2I/11.9**	594 384 500 **2I/11.5**	740 479 100 **2I/11.5**	961 639 400 **2I/11.8**	11.2	1120	
	10	2.68 1 730 **2I/10.2**	5.06 3 430 **2I/10.7**	5.35 3 770 **2I/11.2**	9.97 6 470 **2I/10.3**	11.7 7 610 **2I/10.3**	22.5 14 500 **2I/10.2**	44.1 29 800 **2I/10.7**	60.1 38 700 **2I/10.2**	100 64 850 **2I/10.3**	130 87 500 **2I/10.7**	199 128 600 **2I/10.2**	264 165 900 **2I/9.95**	368 249 100 **2I/10.7**	465 305 000 **2I/10.4**	660 428 100 **2I/10.3**	825 535 200 **2I/10.3**	928 624 400 **2I/10.7**	10	1000	
	9	–	–	–	–	–	–	–	54.1 34 950 **2I/9.22**	84.2 54 500 **2I/9.24**	96.7 63 050 **2I/9.31**	208 128 900 **2I/8.85**	259 161 200 **2I/8.88**	359 231 300 **2I/9.19**	447 288 500 **2I/9.22**	689 446 200 **2I/9.24**	862 557 700 **2I/9.24**	889 579 500 **2I/9.31**	9	900	
	8	2.83 1 780 **2I/8.01**	5.26 3 430 **2I/8.26**	6.85 4 310 **2I/7.99**	10.8 6 820 **2I/8.03**	13.3 8 400 **2I/8.03**	23.8 15 000 **2I/8.01**	46.1 30 000 **2I/8.26**	–	86.5 54 750 **2I/8.03**	–	207 130 600 **2I/8.01**	–	344 223 900 **2I/8.26**	–	635 401 700 **2I/8.03**	794 502 200 **2I/8.03**	–	8	800	
	6.3	2.06 1 320 **2I/6.42**	4.67 3 050 **2I/6.53**	5.31 3 650 **2I/6.86**	8.55 5 490 **2I/6.41**	10.7 6 860 **2I/6.41**	21.2 13 600 **2I/6.42**	33.7 22 050 **2I/6.53**	–	68.1 43 700 **2I/6.41**	–	158 101 200 **2I/6.42**	–	310 202 900 **2I/6.53**	–	549 352 300 **2I/6.41**	635 407 300 **2I/6.41**	–	6.3	630	
1 120 000	160	–	–	–	–	–	9 000 **3I/151**	18 000 **3I/153**	–	–	–	–	–	–	–	–	–	–			
	125	–	–	–	–	–	10 900 **3I/123**	21 800 **3I/123**	27 200 **3I/123**	41 200 **3I/128**	58 000 **3I/131**	85 000 **3I/119**	115 000 **3I/123**	170 000 **3I/125**	230 000 **3I/123**	290 000 **3I/127**	345 000 **3I/127**	462 000 **3I/131**			
	100	–	–	–	–	–	11 500 **3I/103**	23 000 **3I/101**	33 500 **3I/100**	50 000 **3I/107**	71 000 **3I/108**	103 000 **3I/100**	145 000 **3I/98.5**	206 000 **3I/98.5**	284 700 **3I/100**	355 000 **3I/105**	437 000 **3I/105**	493 400 **3I/103**			
	90	–	–	–	–	–	–	–	35 500 **3I/89.4**	53 000 **3I/93.7**	71 000 **3I/93.3**	109 000 **3I/86.4**	150 000 **3I/88.8**	218 000 **3I/89**	263 600 **3I/89.7**	357 800 **3I/90.1**	447 300 **3I/90.1**	491 500 **3I/92.7**			
	80	–	2360 **3I/75.2**	2900 **3I/78.2**	4 600 **3I/82.7**	5 410 **3I/82.7**	10 600 **3I/75.5**	21 200 **3I/75.3**	35 500 **3I/81.4**	53 000 **3I/85.7**	75 000 **3I/86.1**	109 000 **3I/84**	150 000 **3I/82.7**	218 000 **3I/82.7**	286 700 **3I/84.3**	375 000 **3I/82.5**	462 000 **3I/82.5**	493 100 **3I/81.1**			
	71	–	–	–	–	–	–	–	37 500 **3I/72.8**	56 000 **3I/74.9**	81 600 **3I/74.6**	115 000 **3I/72.6**	160 000 **3I/74.5**	230 000 **3I/74.7**	265 500 **3I/75.3**	357 800 **3I/71**	447 200 **3I/71**	518 300 **3I/73**			
	63	–	2900 **3I/60.1**	3 330 **3I/62.6**	5 460 **3I/66.3**	6 420 **3I/66.3**	12 800 **3I/61.5**	25 700 **3I/60.2**	37 500 **3I/62**	56 000 **3I/63.5**	78 850 **3I/63.8**	116 100 **3I/62.6**	160 000 **3I/61.7**	232 900 **3I/61.5**	278 900 **3I/62.7**	401 900 **3I/67.1**	487 000 **3I/67.1**	517 500 **3I/66**			
	56	–	–	–	–	–	–	–	38 700 **3I/55.4**	58 000 **3I/55.5**	74 800 **3I/55.3**	118 000 **3I/54.1**	165 000 **3I/55.5**	238 300 **3I/55.6**	269 900 **3I/56**	357 900 **3I/57.8**	447 400 **3I/57.8**	539 800 **3I/59.4**			
	50	–	3000 **3I/49.4**	3 780 **3I/51.5**	6300 **3I/49.8**	7 630 **3I/49.8**	13 200 **3I/51.2**	26 750 **3I/49.5**	38 950 **3I/50.4**	58 500 **3I/50.8**	78 800 **3I/51**	116 200 **3I/52.6**	165 900 **3I/51.8**	233 300 **3I/51.7**	278 400 **3I/52.7**	398 700 **3I/52.9**	498 400 **3I/52.9**	531 200 **3I/52**			
	45	–	–	–	–	–	–	–	40 750 **3I/45.1**	60 000 **3I/44.4**	84 600 **3I/44.2**	123 600 **3I/45.4**	175 100 **3I/46.6**	238 600 **3I/46.7**	277 200 **3I/47.1**	355 500 **3I/45.5**	444 400 **3I/45.5**	554 400 **3I/46.8**			
	40	–	3070 **3I/40.8**	3 340 **3I/42.5**	5 460 **3I/43.6**	6 430 **3I/43.6**	13 650 **3I/39.1**	26 800 **3I/40.8**	38 550 **3I/38.7**	61 500 **3I/38.5**	79 150 **3I/39.9**	125 000 **3I/41.5**	167 200 **3I/40.4**	240 900 **3I/42.4**	281 200 **3I/41.2**	356 400 **3I/40.7**	443 500 **3I/40.7**	562 300 **3I/42.3**			
	35.5	–	–	–	–	–	–	–	38 800 **3I/37.5**	61 500 **3I/36.5**	74 650 **3I/36.3**	123 400 **3I/34.4**	153 900 **3I/35.4**	238 700 **3I/36.9**	285 200 **3I/37.2**	361 500 **3I/37.4**	449 900 **3I/37.4**	570 400 **3I/38.4**			

For n_1 lower than 560 rpm see page 107.

$n_{N2} \cdot L_h$ rpm · h	i_N	50	63	64	80	81	100	125	140	160	180	200	225	250	280	320	321	360	i_N	n_1 rpm	n_{N2}
		Nominal output power P_{N2} [hp] Nominal output torque T_{N2} [lb in] Train of gears / ratio ... / i																			
1 120 000	31.5	–	3.98 3000 3I/33.5	4.26 3350 3I/34.9	8.81 6 500 3I/32.8	10.2 7500 3I/32.8	17.5 12 800 3I/32.6	31.7 23 950 3I/33.5	47.6 34 500 3I/32.2	85.1 60 600 3I/31.6	94.6 69 850 3I/32.8	180 127 900 3I/31.5	213 146 700 3I/30.6	305 230 300 3I/33.5	395 289 200 3I/32.5	487 366 600 3I/33.5▲	606 456 300 3I/33.5▲	740 578 500 3I/34.7▲	31.5	2800	90
	28	–	–	–	–	–	14.7 10 700 2I/28.8	–	43.9 32 250 3I/29.1	72.7 52 050 3I/28.4	84.7 61 100 3I/28.6	167 114 300 3I/27.2	199 137 200 3I/27.3	293 212 300 3I/28.7	377 274 200 3I/28.8	491 371 600 3I/30	611 462 500 3I/30	738 563 000 3I/30.3	28	2500	
	25	1.64 1 120 2I/24.4	3.83 2 600 2I/24.1	4.33 3 050 2I/25.1	6.55 4 790 2I/26	7.56 5 530 2I/26	17.6 11 700 2I/23.7	32.9 22 300 2I/24.1	46.2 31 300 2I/24.1	70.8 49 050 2I/24.6	99.8 71 200 2I/25.4	145 98 950 2I/24.2	203 142 600 2I/25	290 203 700 2I/25	395 273 700 2I/24.6	– 306 800 2I/25	– 419 900 2I/25	– 592 300 2I/25.7	25	2240	
	22.4	–	–	–	–	–	–	–	52.6 35 950 2I/21.7	78.9 55 900 2I/22.5	107 78 950 2I/23.3	153 106 700 2I/22.2	213 154 500 2I/23	300 207 600 2I/22	427 298 500 2I/22.2	474 341 200 2I/22.8	600 432 100 2I/22.8	814 598 900 2I/23.4	22.4	2000	
	20	1.86 1 310 2I/20.1	4.74 3 200 2I/19.3	4.74 3 330 2I/20.1	7.79 5 680 2I/20.8	9.01 6 570 2I/20.8	20.1 13 600 2I/19.3	39.6 26 700 2I/19.3	56.6 38 950 2I/19.6	80.9 58 500 2I/20.7	108 78 850 2I/20.8	163 116 100 2I/20.3	236 165 700 2I/20	338 232 900 2I/19.7	430 301 900 2I/20.1	507 366 400 2I/20.6	695 502 100 2I/20.6	922 655 700 2I/20.3	20	1800	
	18	–	–	–	–	–	–	–	58.9 40 700 2I/17.6	89.4 63 700 2I/18.1	115 81 300 2I/18	178 123 400 2I/17.6	241 171 600 2I/18.1	340 238 300 2I/17.8	432 305 200 2I/17.9	547 382 900 2I/17.8	681 476 900 2I/17.8	894 643 400 2I/18.3	18	1600	
	16	2.11 1 550 2I/16.3	4.81 3 430 2I/15.8	5.08 3 780 2I/16.5	9.15 6 450 2I/15.7	10.8 7 630 2I/15.7	20.7 15 000 2I/16.1	41.9 29 850 2I/15.8	54.4 36 850 2I/15.1	92.2 65 050 2I/15.7	106 78 950 2I/16.6	178 129 100 2I/16.1	240 169 200 2I/15.6	343 249 600 2I/16.2	410 290 000 2I/15.7	600 429 500 2I/15.9	750 536 800 2I/15.9	911 656 300 2I/16	16	1400	
	14	–	–	–	–	–	–	–	48.6 36 050 2I/14.7	90.3 64 000 2I/14.1	120 86 850 2I/14.4	185 129 400 2I/13.9	210 154 500 2I/14.6	283 208 000 2I/14.6	403 299 000 2I/14.7	601 433 000 2I/14.3	752 541 300 2I/14.3	903 655 900 2I/14.4	14	1250	
	12.5	2.24 1 550 2I/12.3	4.36 3 200 2I/13.1	4.39 3 360 2I/13.6	7.55 5 820 2I/13.7	8.74 6 740 2I/13.7	19.7 13 650 2I/12.3	36.4 26 800 2I/13.1	52.1 39 050 2I/13.3	76.7 58 600 2I/13.6	103 79 000 2I/13.6	159 116 200 2I/13	231 165 800 2I/12.8	317 233 400 2I/13.1	404 302 500 2I/13.3	496 373 000 2I/13.4	669 502 700 2I/13.4	888 656 900 2I/13.1	12.5	1120	
	11.2	–	–	–	–	–	–	–	54.4 40 800 2I/11.9	85.2 63 800 2I/11.9	117 86 950 2I/11.8	175 123 500 2I/11.2	235 169 900 2I/11.5	321 238 700 2I/11.8	417 312 900 2I/11.9	534 387 000 2I/11.5	665 482 000 2I/11.5	887 661 500 2I/11.8	11.2	1000	
	10	2.42 1 740 2I/10.2	4.56 3 430 2I/10.7	4.83 3 790 2I/11.2	9 6 490 2I/10.3	10.6 7 640 2I/10.3	20.9 15 000 2I/10.2	39.8 29 900 2I/10.7	54.1 38 700 2I/10.2	90.3 65 100 2I/10.3	117 87 500 2I/10.7	180 129 100 2I/10.2	246 171 200 2I/9.95	332 249 900 2I/10.7	421 306 900 2I/10.4	596 429 600 2I/10.3	745 536 900 2I/10.3	862 644 500 2I/10.7	10	900	
	9	–	–	–	–	–	–	–	48.1 34 950 2I/9.22	75.3 54 850 2I/9.24	86.5 63 450 2I/9.31	186 129 400 2I/8.85	239 167 000 2I/8.88	331 239 600 2I/9.19	400 290 300 2I/9.22	635 462 200 2I/9.24	794 577 800 2I/9.24	795 583 300 2I/9.31	9	800	
	8	2.53 1 800 2I/8.01	4.67 3 430 2I/8.26	6.08 4 310 2I/7.99	9.6 6 840 2I/8.03	11.8 8 430 2I/8.03	21.1 15 000 2I/8.01	41.6 30 550 2I/8.26	–	77.3 55 100 2I/8.03	–	190 135 400 2I/8.01	–	307 225 300 2I/8.26	–	584 416 400 2I/8.03	730 520 500 2I/8.03	–	8	710	
	6.3	1.83 1 320 2I/6.42	4.15 3 050 2I/6.53	4.72 3 650 2I/6.86	7.63 5 510 2I/6.41	9.53 6 880 2I/6.41	18.8 13 600 2I/6.42	30.1 22 150 2I/6.53	–	60.5 43 700 2I/6.41	–	141 101 800 2I/6.42	–	277 203 600 2I/6.53	–	490 354 000 2I/6.41	568 409 900 2I/6.41	–	6.3	560	
1 000 000	160	–	–	–	–	–	9 250 3I/151	18 500 3I/153	–	–	–	–	–	–	–	–	–	–			
	125	–	–	–	–	–	11 200 3I/123	22 400 3I/123	28 000 3I/123	42 500 3I/128	60 000 3I/131	87 500 3I/119	118 000 3I/123	175 000 3I/125	236 000 3I/123	300 000 3I/127	355 000 3I/127	475 000 3I/131			
	100	–	–	–	–	–	11 800 3I/103	23 600 3I/101	34 500 3I/100	51 500 3I/107	73 000 3I/108	106 000 3I/100	150 000 3I/98.5	212 000 3I/98.5	295 000 3I/100	365 000 3I/105	450 000 3I/105	511 200 3I/103			
	90	–	–	–	–	–	–	–	36 500 3I/89.4	54 500 3I/93.7	73 000 3I/93.3	112 000 3I/86.4	155 000 3I/88.8	224 000 3I/89	273 200 3I/89.7	370 900 3I/90.1	463 600 3I/90.1	504 900 3I/92.7			

For n_1 lower than 560 rpm see page 107.
▲ Possible forced lubrication with heat exchanger: consult us.

$n_{N2} \cdot L_h$ rpm · h	i_N	50	63	64	80	81	100	125	140	160	180	200	225	250	280	320	321	360	i_N	n_1 rpm	n_{N2}
		Nominal output power P_{N2} [hp] Nominal output torque T_{N2} [lb in] Train of gears / ratio ... / i																			
1 000 000	80	–	2430 3I/75.2	3000 3I/78.2	4 620 3I/82.7	5 430 3I/82.7	10 900 3I/75.5	21 800 3I/75.3	36 500 3I/81.4	54 500 3I/85.7	79 300 3I/86.1	112 000 3I/84	155 000 3I/82.7	224 000 3I/82.7	297 100 3I/84.3	387 000 3I/82.5	475 000 3I/82.5	511 100 3I/81.1			
	71	–	–	–	–	–	–	–	38 700 3I/72.8	58 000 3I/74.9	82 500 3I/74.6	118 000 3I/72.6	165 000 3I/74.5	239 600 3I/74.7	275 000 3I/75.3	370 600 3I/71	463 300 3I/71	532 500 3I/73			
	63	–	2900 3I/60.1	3 340 3I/62.6	5 480 3I/66.3	6 440 3I/66.3	12 800 3I/61.5	25 700 3I/60.2	39 100 3I/62	58 000 3I/63.5	79 100 3I/63.8	116 500 3I/62.6	166 300 3I/61.7	233 800 3I/61.5	288 500 3I/62.7	403 700 3I/67.1	487 000 3I/67.1	524 600 3I/66			
	56	–	–	–	–	–	–	–	38 700 3I/55.4	60 000 3I/55.5	75 000 3I/55.3	122 000 3I/54.1	170 000 3I/55.5	239 100 3I/55.6	273 300 3I/56	369 400 3I/57.8	461 700 3I/57.8	546 600 3I/59.4			
	50	–	3000 3I/49.4	3 790 3I/51.5	6 510 3I/49.8	7 660 3I/49.8	13 200 3I/51.2	26 500 3I/49.5	39 100 3I/50.4	58 700 3I/50.8	79 100 3I/51	116 600 3I/52.6	166 500 3I/51.8	234 100 3I/51.7	288 400 3I/52.7	403 500 3I/52.9	504 400 3I/52.9	538 800 3I/52			
	45	–	–	–	–	–	–	–	40 900 3I/45.1	61 500 3I/44.4	87 100 3I/44.2	124 000 3I/45.4	175 700 3I/46.6	239 500 3I/46.7	281 200 3I/47.1	368 500 3I/45.5	460 600 3I/45.5	562 300 3I/46.8			
	40	–	3070 3I/40.8	3 350 3I/42.5	5 480 3I/43.6	6 450 3I/43.6	13 700 3I/39.1	26 900 3I/40.8	39 950 3I/38.7	61 500 3I/38.5	82 050 3I/39.9	125 000 3I/41.5	173 300 3I/40.4	249 700 3I/42.4	285 200 3I/41.2	361 500 3I/40.7	449 900 3I/40.7	570 400 3I/42.3			
	35.5	–	–	–	–	–	–	–	47.6 40 200 3I/37.5	77.9 63 950 3I/36.5	94.6 77 350 3I/36.3	160 123 900 3I/34.4	200 159 500 3I/35.4	288 239 500 3I/36.9	346 289 200 3I/37.2	436 366 600 3I/37.4▲	543 456 700 3I/37.4▲	668 578 500 3I/38.4▲	35.5	2800	80
	31.5	–	3.55 3000 3I/33.5	3.8 3350 3I/34.9	7.9 6 520 3I/32.8	9.29 7 670 3I/32.8	15.6 12 800 3I/32.6	29.3 24 800 3I/33.5	43.9 35 650 3I/32.2	78.6 62 700 3I/31.6	87.4 72 250 3I/32.8	163 129 500 3I/31.5	193 148 700 3I/30.6	282 238 200 3I/33.5	357 293 200 3I/32.5	441 371 600 3I/33.5	548 462 500 3I/33.5	670 586 400 3I/34.7	31.5	2500	
	28	–	–	–	–	–	13.2 10 750 2I/28.8	–	40.7 33 300 3I/29.1	66 52 700 3I/28.4	76.9 61 900 3I/28.6	154 118 200 3I/27.2	181 139 000 3I/27.3	266 215 100 3I/28.7	343 277 800 3I/28.8	446 376 500 3I/30	554 468 600 3I/30	670 570 400 3I/30.3	28	2240	
	25	1.47 1 130 2I/24.4	3.43 2 610 2I/24.1	3.88 3 060 2I/25.1	5.93 4 860 2I/26	6.85 5 610 2I/26	15.7 11 750 2I/23.7	29.5 22 400 2I/24.1	41.4 31 400 2I/24.1	63.4 49 200 2I/24.6	89.4 71 450 2I/25.4	130 99 300 2I/24.2	182 143 100 2I/25	260 204 500 2I/25	354 274 700 2I/24.6	395 311 000 2I/25	535 421 400 2I/25	740 600 500 2I/25.7	25	2000	
	22.4	–	–	–	–	–	–	–	47.5 36 100 2I/21.7	71.2 56 100 2I/22.5	97 79 200 2I/23.3	138 107 000 2I/22.2	193 155 000 2I/23	270 208 300 2I/22	386 299 500 2I/22.2	432 345 500 2I/22.8	542 433 500 2I/22.8	756 618 100 2I/23.4	22.4	1800	
	20	1.66 1 310 2I/20.1	4.22 3 210 2I/19.3	4.23 3 340 2I/20.1	7.02 5 760 2I/20.8	8.12 6 670 2I/20.8	18 13 650 2I/19.3	35.3 26 800 2I/19.3	50.5 39 100 2I/19.6	72.1 58 750 2I/20.7	96.8 79 150 2I/20.8	145 116 500 2I/20.3	211 166 300 2I/20	301 233 800 2I/19.7	383 303 000 2I/20.1	457 371 600 2I/20.6	620 504 000 2I/20.6	823 658 500 2I/20.3	20	1600	
	18	–	–	–	–	–	–	–	51.7 40 850 2I/17.6	78.6 63 950 2I/18.1	101 81 650 2I/18	157 124 000 2I/17.6	216 175 600 2I/18.1	299 239 300 2I/17.8	394 317 700 2I/17.9	486 389 100 2I/17.8	606 484 600 2I/17.8	814 669 700 2I/18.3	18	1400	
	16	1.89 1 550 2I/16.3	4.29 3 430 2I/15.8	4.55 3 790 2I/16.5	8.2 6 480 2I/15.7	9.7 7 660 2I/15.7	18.5 15 000 2I/16.1	37.5 29 950 2I/15.8	48.7 37 000 2I/15.1	82.6 65 250 2I/15.7	94.6 79 200 2I/16.6	160 129 600 2I/16.1	215 169 800 2I/15.6	307 250 500 2I/16.2	379 300 000 2I/15.7	537 431 000 2I/15.9	672 538 800 2I/15.9	816 658 700 2I/16	16	1250	
	14	–	–	–	–	–	–	–	43.7 36 150 2I/14.7	81.2 64 250 2I/14.1	108 87 150 2I/14.4	166 129 800 2I/13.9	188 155 100 2I/14.6	254 208 700 2I/14.6	363 300 100 2I/14.7	557 447 500 2I/14.3	696 559 400 2I/14.3	836 677 900 2I/14.4	14	1120	
	12.5	2 1 550 2I/12.3	3.9 3 220 2I/13.1	3.93 3 370 2I/13.6	6.77 5 840 2I/13.7	7.83 6 760 2I/13.7	17.6 13 650 2I/12.3	32.6 26 900 2I/13.1	46.7 39 200 2I/13.3	68.7 58 850 2I/13.6	92.2 79 300 2I/13.6	143 116 600 2I/13	207 166 400 2I/12.8	284 234 200 2I/13.1	362 303 600 2I/13.3	446 375 400 2I/13.4	599 504 500 2I/13.4	796 659 200 2I/13.1	12.5	1000	
	11.2	–	–	–	–	–	–	–	49.1 40 950 2I/11.9	76.9 64 000 2I/11.9	105 87 250 2I/11.8	158 123 900 2I/11.2	217 175 000 2I/11.5	290 239 500 2I/11.8	387 322 900 2I/11.9	483 389 200 2I/11.5	602 484 800 2I/11.5	824 682 700 2I/11.8	11.2	900	

For n_1 lower than 560 rpm see page 107.
▲ Possible forced lubrication with heat exchanger: consult us.

$n_{N2} \cdot L_h$ rpm · h	i_N	50	63	64	80	81	100	125	140	160	180	200	225	250	280	320	321	360	i_N	n_1 rpm	n_{N2}
		Nominal output power P_{N2} [hp] Nominal output torque T_{N2} [lb in] Train of gears / ratio ... / i																			
1 000 000	10	2.16 1 740 2I/10.2	4.05 3 430 2I/10.7	4.31 3 800 2I/11.2	8.03 6 520 2I/10.3	9.45 7 670 2I/10.3	18.6 15 000 2I/10.2	35.5 30 050 2I/10.7	48.1 38 700 2I/10.2	80.5 65 350 2I/10.3	104 87 500 2I/10.7	161 129 600 2I/10.2	226 177 300 2I/9.95	297 250 800 2I/10.7	377 308 900 2I/10.4	532 431 200 2I/10.3	664 538 900 2I/10.3	794 667 700 2I/10.7	10	800	80
	9	–	–	–	–	–	–	–	42.7 34 950 2I/9.22	67.3 55 200 2I/9.24	77.3 63 900 2I/9.31	165 129 900 2I/8.85	213 167 500 2I/8.88	304 248 300 2I/9.19	357 292 200 2I/9.22	567 465 600 2I/9.24	709 582 000 2I/9.24	730 603 300 2I/9.31	9	710	
	8	2.25 1 800 2I/8.01	4.14 3 430 2I/8.26	5.4 4 310 2I/7.99	8.55 6 870 2I/8.03	10.5 8 470 2I/8.03	18.7 15 000 2I/8.01	36.9 30 550 2I/8.26	–	69 55 500 2I/8.03	–	170 136 000 2I/8.01	–	280 231 500 2I/8.26	–	537 431 600 2I/8.03	671 539 500 2I/8.03	–	8	630	
900 000	160	–	–	–	–	–	9 500 3I/151	19 000 3I/153	–	–	–	–	–	–	–	–	–	–			
	125	–	–	–	–	–	11 500 3I/123	23 000 3I/123	29 000 3I/123	43 700 3I/128	61 500 3I/131	90 000 3I/119	122 000 3I/123	180 000 3I/125	243 000 3I/123	307 000 3I/127	365 000 3I/127	487 000 3I/131			
	100	–	–	–	–	–	12 200 3I/103	24 300 3I/101	35 500 3I/100	53 000 3I/107	75 000 3I/108	109 000 3I/100	150 000 3I/98.5	218 000 3I/98.5	304 100 3I/100	375 000 3I/105	462 000 3I/105	529 800 3I/103			
	90	–	–	–	–	–	–	–	37 500 3I/89.4	56 000 3I/93.7	75 450 3I/93.3	115 000 3I/86.4	160 000 3I/88.8	230 000 3I/89	283 100 3I/89.7	382 100 3I/90.1	477 600 3I/90.1	518 300 3I/92.7			
	80	–	2500 3I/75.2	3 070 3I/78.2	4 630 3I/82.7	5 450 3I/82.7	11 200 3I/75.5	22 450 3I/75.3	37 500 3I/81.4	56 000 3I/85.7	79 600 3I/86.1	117 100 3I/84	160 000 3I/82.7	230 000 3I/82.7	304 700 3I/84.3	404 900 3I/82.5	487 000 3I/82.5	529 500 3I/81.1			
	71	–	–	–	–	–	–	–	40 000 3I/72.8	58 000 3I/74.9	82 500 3I/74.6	118 000 3I/72.6	165 000 3I/74.5	240 500 3I/74.7	284 600 3I/75.3	382 000 3I/71	477 500 3I/71	539 800 3I/73			
	63	–	3000 3I/60.1	3 350 3I/62.6	5 500 3I/66.3	6 470 3I/66.3	13 200 3I/61.5	26 900 3I/60.2	39 250 3I/62	58 900 3I/63.5	79 400 3I/63.8	116 900 3I/62.6	166 800 3I/61.7	234 500 3I/61.5	297 800 3I/62.7	405 000 3I/67.1	506 300 3I/67.1	531 200 3I/66			
	56	–	–	–	–	–	–	–	40 500 3I/55.4	60 000 3I/55.5	75 300 3I/55.3	124 300 3I/54.1	170 000 3I/55.5	239 900 3I/55.6	277 200 3I/56	382 200 3I/57.8	477 800 3I/57.8	554 400 3I/59.4			
	50	–	3070 3I/49.4	3 810 3I/51.5	6 530 3I/49.8	7 690 3I/49.8	13 600 3I/51.2	27 200 3I/49.5	39 250 3I/50.4	58 950 3I/50.8	79 400 3I/51	117 100 3I/52.6	167 100 3I/51.8	235 000 3I/51.7	298 900 3I/52.7	405 000 3I/52.9	506 300 3I/52.9	546 500 3I/52			
	45	–	–	–	–	–	–	–	41 050 3I/45.1	61 500 3I/44.4	87 400 3I/44.2	124 500 3I/45.4	176 400 3I/46.6	240 400 3I/46.7	285 200 3I/47.1	381 900 3I/45.5	477 400 3I/45.5	570 400 3I/46.8			
	40	–	3.43 3150 3I/40.8	3.52 3 360 3I/42.5	5.61 5 510 3I/43.6	6.61 6 480 3I/43.6	15.6 13 750 3I/39.1	29.4 27 000 3I/40.8	46.6 40 550 3I/38.7	72.7 63 000 3I/38.5	92.1 82 750 3I/39.9	139 130 200 3I/41.5	196 177 900 3I/40.4	264 251 800 3I/42.4	312 289 200 3I/41.2	400 366 600 3I/40.7▲	498 456 300 3I/40.7▲	608 578 500 3I/42.3▲	40	2800	71
	35.5	–	–	–	–	–	–	–	43.4 41 100 3I/37.5	69.8 64 200 3I/36.5	87.4 80 000 3I/36.3	143 124 300 3I/34.4	185 165 000 3I/35.4	258 240 400 3I/36.9	313 293 200 3I/37.2	401 378 000 3I/37.4	501 472 500 3I/37.4	605 586 400 3I/38.4	35.5	2500	
	31.5	–	3.26 3070 3I/33.5	3.51 3450 3I/34.9	7.1 6 540 3I/32.8	8.35 7 700 3I/32.8	14.4 13 200 3I/32.6	27.2 25 650 3I/33.5	40.7 36 850 3I/32.2	72.8 64 800 3I/31.6	80.9 74 650 3I/32.8	147 129 900 3I/31.5	175 150 600 3I/30.6	261 246 200 3I/33.5	324 297 100 3I/32.5	400 376 500 3I/33.5	498 468 600 3I/33.5	608 594 100 3I/34.7	31.5	2240	
	28	–	–	–	–	–	11.8 10 750 2I/28.8	–	37.6 34 450 3I/29.1	59.7 53 450 3I/28.4	69.6 62 750 3I/28.6	142 122 200 3I/27.2	164 140 900 3I/27.3	241 218 000 3I/28.7	310 281 600 3I/28.8	403 381 700 3I/30	502 475 000 3I/30	606 578 200 3I/30.3	28	2000	
	25	1.32 1 130 2I/24.4	3.1 2 610 2I/24.1	3.5 3 070 2I/25.1	5.4 4 920 2I/26	6.24 5 680 2I/26	14.2 11 800 2I/23.7	26.6 22 450 2I/24.1	37.4 31 500 2I/24.1	57.3 49 400 2I/24.6	80.7 71 700 2I/25.4	117 99 600 2I/24.2	164 143 600 2I/25	234 205 100 2I/25	320 275 600 2I/24.6	366 320 400 2I/25	483 422 800 2I/25	668 602 500 2I/25.7	25	1800	

For n_1 lower than 560 rpm see page 107.
▲ Possible forced lubrication with heat exchanger: consult us.

$n_{N2} \cdot L_h$ rpm · h	i_N	Nominal output power P_{N2} [hp] / Nominal output torque T_{N2} [lb in] / Train of gears / ratio ... / i																	i_N	n_1 rpm	n_{N2}
		50	63	64	80	81	100	125	140	160	180	200	225	250	280	320	321	360			
900 000	22.4	–	–	–	–	–	–	–	42.4 36 200 2I/21.7	63.5 56 300 2I/22.5	86.5 79 500 2I/23.3	123 107 400 2I/22.2	172 155 500 2I/23	241 209 000 2I/22	344 300 600 2I/22.2	389 350 400 2I/22.8	483 435 100 2I/22.8	696 640 300 2I/23.4	22.4	1600	71
	20	1.46 1 320 2I/20.1	3.71 3 220 2I/19.3	3.74 3 380 2I/20.1	6.24 5 850 2I/20.8	7.22 6 770 2I/20.8	15.8 13 700 2I/19.3	31 26 950 2I/19.3	44.4 39 250 2I/19.6	63.4 59 000 2I/20.7	85 79 500 2I/20.8	128 117 000 2I/20.3	185 167 000 2I/20	265 234 700 2I/19.7	337 304 300 2I/20.1	406 377 600 2I/20.6	544 506 100 2I/20.6	723 661 300 2I/20.3	20	1400	
	18	–	–	–	–	–	–	–	46.3 41 000 2I/17.6	70.4 64 200 2I/18.1	90.3 81 950 2I/18	140 124 400 2I/17.6	194 176 200 2I/18.1	268 240 100 2I/17.8	363 328 700 2I/17.9	437 391 500 2I/17.8	544 487 500 2I/17.8	752 692 800 2I/18.3	18	1250	
	16	1.7 1 560 2I/16.3	3.84 3 430 2I/15.8	4.1 3 810 2I/16.5	7.37 6 500 2I/15.7	8.72 7 690 2I/15.7	16.6 15 000 2I/16.1	33.8 30 100 2I/15.8	43.8 37 150 2I/15.1	74.3 65 500 2I/15.7	85 79 500 2I/16.6	144 130 000 2I/16.1	194 170 400 2I/15.6	276 251 400 2I/16.2	351 310 000 2I/15.7	483 432 500 2I/15.9	604 540 600 2I/15.9	734 661 000 2I/16	16	1120	
	14	–	–	–	–	–	–	–	39.2 36 300 2I/14.7	72.7 64 450 2I/14.1	96.4 87 500 2I/14.4	149 130 300 2I/13.9	169 155 600 2I/14.6	228 209 400 2I/14.6	325 301 100 2I/14.7	514 463 000 2I/14.3	643 578 700 2I/14.3	773 701 300 2I/14.4	14	1000	
	12.5	1.81 1 560 2I/12.3	3.53 3 230 2I/13.1	3.55 3 380 2I/13.6	6.11 5 860 2I/13.7	7.07 6 780 2I/13.7	15.9 13 700 2I/12.3	29.5 27 000 2I/13.1	42.2 39 300 2I/13.3	62.1 59 050 2I/13.6	83.2 79 550 2I/13.6	129 117 000 2I/13	187 167 000 2I/12.8	257 235 000 2I/13.1	327 304 600 2I/13.3	404 377 700 2I/13.4	541 506 200 2I/13.4	719 661 400 2I/13.1	12.5	900	
	11.2	–	–	–	–	–	–	–	43.8 41 100 2I/11.9	68.6 64 250 2I/11.9	93.9 87 500 2I/11.8	141 124 400 2I/11.2	193 175 000 2I/11.5	258 240 400 2I/11.8	357 334 500 2I/11.9	432 391 800 2I/11.5	538 487 800 2I/11.5	759 707 300 2I/11.8	11.2	800	
	10	1.93 1 750 2I/10.2	3.59 3 430 2I/10.7	3.84 3 820 2I/11.2	7.16 6 540 2I/10.3	8.42 7 700 2I/10.3	16.5 15 000 2I/10.2	31.6 30 150 2I/10.7	42.7 38 700 2I/10.2	71.7 65 550 2I/10.3	92.3 87 500 2I/10.7	143 130 000 2I/10.2	208 183 800 2I/9.95	264 251 800 2I/10.7	338 312 700 2I/10.4	474 432 800 2I/10.3	592 541 000 2I/10.3	730 692 000 2I/10.7	10	710	
	9	–	–	–	–	–	–	–	37.9 34 950 2I/9.22	60.1 55 550 2I/9.24	69 64 300 2I/9.31	147 130 300 2I/8.85	189 167 500 2I/8.88	279 256 800 2I/9.19	319 294 000 2I/9.22	505 467 300 2I/9.24	632 584 100 2I/9.24	671 625 300 2I/9.31	9	630	
	8	2 1 800 2I/8.01	3.68 3 430 2I/8.26	4.8 4 310 2I/7.99	7.63 6 890 2I/8.03	9.4 8 500 2I/8.03	16.6 15 000 2I/8.01	32.8 30 550 2I/8.26	–	61.7 55 750 2I/8.03	–	151 136 000 2I/8.01	–	258 239 800 2I/8.26	–	495 447 100 2I/8.03	618 558 900 2I/8.03	–	8	560	
800 000	160	–	–	–	–	–	9 750 3I/151	19 500 3I/153	–	–	–	–	–	–	–	–	–	–			
	125	–	–	–	–	–	11 800 3I/123	23 600 3I/123	30 000 3I/123	45 000 3I/128	63 000 3I/131	92 500 3I/119	128 000 3I/123	185 000 3I/125	250 000 3I/123	315 000 3I/127	375 000 3I/127	500 000 3I/131			
	100	–	–	–	–	–	12 500 3I/103	25 000 3I/101	36 500 3I/100	54 500 3I/107	79 850 3I/108	112 000 3I/100	155 000 3I/98.5	224 000 3I/98.5	305 300 3I/100	387 000 3I/105	475 000 3I/105	549 200 3I/103			
	90	–	–	–	–	–	–	–	38 700 3I/89.4	58 000 3I/93.7	75 750 3I/93.3	118 000 3I/86.4	165 000 3I/88.8	241 000 3I/89	293 300 3I/89.7	383 500 3I/90.1	479 400 3I/90.1	532 500 3I/92.7			
	80	–	2500 3I/75.2	3 080 3I/78.2	4 650 3I/82.7	5 470 3I/82.7	11 200 3I/75.5	22 550 3I/75.3	38 700 3I/81.4	58 000 3I/85.7	79 850 3I/86.1	117 500 3I/84	160 000 3I/82.7	235 900 3I/82.7	305 800 3I/84.3	406 300 3I/82.5	487 000 3I/82.5	547 800 3I/81.1			
	71	–	–	–	–	–	–	–	40 000 3I/72.8	60 000 3I/74.9	85 000 3I/74.6	122 000 3I/72.6	170 000 3I/74.5	241 300 3I/74.7	293 700 3I/75.3	383 300 3I/71	479 100 3I/71	546 600 3I/73			
	63	–	3000 3I/60.1	3 370 3I/62.6	5 520 3I/66.3	6 490 3I/66.3	13 200 3I/61.5	27 000 3I/60.2	39 350 3I/62	59 100 3I/63.5	79 650 3I/63.8	117 300 3I/62.6	167 400 3I/61.7	235 400 3I/61.5	305 100 3I/62.7	406 500 3I/67.1	508 200 3I/67.1	546 700 3I/66			
	56	–	–	–	–	–	–	–	40 650 3I/55.4	61 500 3I/55.5	75 600 3I/55.3	124 700 3I/54.1	176 700 3I/55.5	240 800 3I/55.6	285 700 3I/56	383 600 3I/57.8	479 600 3I/57.8	562 300 3I/59.4			

For n_1 lower than 560 rpm see page 107.

$n_{N2} \cdot L_h$ rpm · h	i_N	50	63	64	80	81	100	125	140	160	180	200	225	250	280	320	321	360	i_N	n_1 rpm	n_{N2}
		Nominal output power P_{N2} [hp] Nominal output torque T_{N2} [lb in] Train of gears / ratio ... / i																			
800 000	50	–	3070 3I/49.4	3 820 3I/51.5	6 560 3I/49.8	7 720 3I/49.8	13 600 3I/51.2	27 200 3I/49.5	39 400 3I/50.4	59 150 3I/50.8	79 700 3I/51	117 500 3I/52.6	167 800 3I/51.8	235 900 3I/51.7	305 700 3I/52.7	406 500 3I/52.9	508 200 3I/52.9	554 300 3I/52			
	45	–	–	–	–	–	–	–	40.6 41 200 3I/45.1	63 63 000 3I/44.4	88.1 87 750 3I/44.2	122 125 000 3I/45.4	169 177 000 3I/46.6	230 241 300 3I/46.7	273 289 200 3I/47.1	375 383 600 3I/45.5▲	468 479 500 3I/45.5▲	549 578 500 3I/46.8▲	45	2800	63
	40	–	3.15 3 240 3I/40.8	3.15 3 370 3I/42.5	5.04 5 530 3I/43.6	5.92 6 500 3I/43.6	14 13 800 3I/39.1	26.3 27 100 3I/40.8	41.7 40 700 3I/38.7	64.9 63 000 3I/38.5	82.5 83 050 3I/39.9	125 130 600 3I/41.5	175 178 500 3I/40.4	236 252 700 3I/42.4	282 293 200 3I/41.2	362 371 600 3I/40.7	450 462 500 3I/40.7	550 586 400 3I/42.3	40	2500	
	35.5	–	–	–	–	–	–	–	39.1 41 250 3I/37.5	62.8 64 400 3I/36.5	80.9 82 700 3I/36.3	129 124 800 3I/34.4	171 170 500 3I/35.4	232 241 200 3I/36.9	284 297 100 3I/37.2	365 384 000 3I/37.4	456 479 900 3I/37.4	549 594 100 3I/38.4	35.5	2240	
	31.5	–	2.91 3070 3I/33.5	3.13 3450 3I/34.9	6.36 6 570 3I/32.8	7.48 7 730 3I/32.8	12.9 13 200 3I/32.6	25.1 26 500 3I/33.5	37.6 38 150 3I/32.2	66 65 750 3I/31.6	74.7 77 250 3I/32.8	131 130 400 3I/31.5	158 152 800 3I/30.6	239 252 600 3I/33.5	294 301 100 3I/32.5	362 381 700 3I/33.5	450 475 000 3I/33.5	551 602 200 3I/34.7	31.5	2000	
	28	–	–	–	–	–	10.7 10 800 2I/28.8	–	34.9 35 550 3I/29.1	54.4 54 100 3I/28.4	63.5 63 550 3I/28.6	132 126 200 3I/27.2	149 142 700 3I/27.3	224 225 100 3I/28.7	283 285 200 3I/28.8	368 386 500 3I/30	457 481 000 3I/30	553 585 500 3I/30.3	28	1800	
	25	1.18 1 140 2I/24.4	2.76 2 620 2I/24.1	3.12 3 080 2I/25.1	4.87 4 990 2I/26	5.62 5 760 2I/26	12.7 11 850 2I/23.7	23.8 22 550 2I/24.1	33.3 31 650 2I/24.1	51.1 49 550 2I/24.6	72 71 950 2I/25.4	105 100 000 2I/24.2	147 144 100 2I/25	209 205 900 2I/25	285 276 700 2I/24.6	337 331 900 2I/25	431 424 300 2I/25	596 604 800 2I/25.7	25	1600	
	22.4	–	–	–	–	–	–	–	37.3 36 350 2I/21.7	55.8 56 550 2I/22.5	76 79 850 2I/23.3	108 107 900 2I/22.2	151 156 200 2I/23	212 209 900 2I/22	303 301 800 2I/22.2	346 356 000 2I/22.8	425 437 000 2I/22.8	626 657 800 2I/23.4	22.4	1400	
	20	1.31 1 330 2I/20.1	3.33 3 230 2I/19.3	3.35 3 390 2I/20.1	5.59 5 870 2I/20.8	6.47 6 800 2I/20.8	14.1 13 750 2I/19.3	27.8 27 050 2I/19.3	39.8 39 400 2I/19.6	56.8 59 200 2I/20.7	76.2 79 800 2I/20.8	114 117 400 2I/20.3	166 167 600 2I/20	237 235 600 2I/19.7	302 305 400 2I/20.1	365 380 000 2I/20.6	488 507 900 2I/20.6	648 663 600 2I/20.3	20	1250	
	18	–	–	–	–	–	–	–	41.7 41 150 2I/17.6	63.3 64 400 2I/18.1	81.2 82 200 2I/18	126 124 800 2I/17.6	174 176 800 2I/18.1	241 241 000 2I/17.8	337 339 700 2I/17.9	394 393 900 2I/17.8	490 490 400 2I/17.8	696 716 000 2I/18.3	18	1120	
	16	1.52 1 570 2I/16.3	3.43 3 430 2I/15.8	3.67 3 820 2I/16.5	6.61 6 520 2I/15.7	7.81 7 710 2I/15.7	14.8 15 000 2I/16.1	30.2 30 200 2I/15.8	39.3 37 250 2I/15.1	66.6 65 750 2I/15.7	76.2 79 800 2I/16.6	129 130 500 2I/16.1	173 171 000 2I/15.6	247 252 300 2I/16.2	324 320 800 2I/15.7	433 434 000 2I/15.9	541 542 500 2I/15.9	658 663 300 2I/16	16	1000	
	14	–	–	–	–	–	–	–	35.4 36 400 2I/14.7	65.7 64 700 2I/14.1	86.8 87 500 2I/14.4	134 130 700 2I/13.9	152 156 100 2I/14.6	206 210 100 2I/14.6	293 302 100 2I/14.7	468 468 500 2I/14.3	586 585 600 2I/14.3	718 723 800 2I/14.4	14	900	
	12.5	1.61 1 560 2I/12.3	3.15 3 240 2I/13.1	3.17 3 400 2I/13.6	5.45 5 880 2I/13.7	6.3 6 800 2I/13.7	14.2 13 750 2I/12.3	26.3 27 100 2I/13.1	37.6 39 450 2I/13.3	55.4 59 250 2I/13.6	74.3 79 850 2I/13.6	115 117 400 2I/13	167 167 600 2I/12.8	229 235 900 2I/13.1	291 305 700 2I/13.3	361 380 300 2I/13.4	483 508 100 2I/13.4	641 663 900 2I/13.1	12.5	800	
	11.2	–	–	–	–	–	–	–	39 41 250 2I/11.9	61.1 64 500 2I/11.9	83.3 87 500 2I/11.8	126 124 900 2I/11.2	172 175 000 2I/11.5	230 241 300 2I/11.8	326 344 700 2I/11.9	386 394 300 2I/11.5	481 490 900 2I/11.5	698 733 100 2I/11.8	11.2	710	
	10	1.71 1 750 2I/10.2	3.19 3 430 2I/10.7	3.42 3 830 2I/11.2	6.37 6 570 2I/10.3	7.5 7 720 2I/10.3	14.6 15 000 2I/10.2	28.2 30 250 2I/10.7	37.9 38 700 2I/10.2	63.9 65 800 2I/10.3	81.9 87 500 2I/10.7	127 130 500 2I/10.2	188 187 600 2I/9.95	235 252 700 2I/10.7	311 324 100 2I/10.4	422 434 400 2I/10.3	527 543 000 2I/10.3	671 717 300 2I/10.7	10	630	
	9	–	–	–	–	–	–	–	33.7 34 950 2I/9.22	53.6 55 750 2I/9.24	61.8 64 750 2I/9.31	131 130 800 2I/8.85	168 167 500 2I/8.88	249 257 000 2I/9.19	286 297 400 2I/9.22	451 469 100 2I/9.24	564 586 300 2I/9.24	618 647 800 2I/9.31	9	560	
710 000	160	–	–	–	–	–	10 000 3I/151	20 000 3I/153	–	–	–	–	–	–	–	–	–	–			
	125	–	–	–	–	–	12 200 3I/123	24 300 3I/123	30 700 3I/123	46 200 3I/128	65 000 3I/131	95 000 3I/119	132 000 3I/123	190 000 3I/125	257 000 3I/123	325 000 3I/127	387 000 3I/127	515 000 3I/131			

For n_1 lower than 560 rpm see page 107.
▲ Possible forced lubrication with heat exchanger: consult us.

$n_{N2} \cdot L_h$ rpm · h	i_N	Nominal output power P_{N2} [hp] / Nominal output torque T_{N2} [lb in] / Train of gears / ratio ... / i																	i_N	n_1 rpm	n_{N2}
		50	63	64	80	81	100	125	140	160	180	200	225	250	280	320	321	360			
710 000	100	–	–	–	–	–	12 800 3I/103	25 700 3I/101	37 500 3I/100	56 000 3I/107	80 150 3I/108	115 000 3I/100	160 000 3I/98.5	230 000 3I/98.5	306 400 3I/100	407 900 3I/105	487 000 3I/105	568 900 3I/103			
	90	–	–	–	–	–	–	–	40 000 3I/89.4	58 000 3I/93.7	76 000 3I/93.3	118 000 3I/86.4	165 000 3I/88.8	241 800 3I/89	303 500 3I/89.7	384 900 3I/90.1	481 100 3I/90.1	539 800 3I/92.7			
	80	–	2570 3I/75.2	3 090 3I/78.2	4 670 3I/82.7	5 490 3I/82.7	11 500 3I/75.5	22 650 3I/75.3	39 550 3I/81.4	58 000 3I/85.7	80 150 3I/86.1	117 900 3I/84	168 400 3I/82.7	236 700 3I/82.7	306 800 3I/84.3	407 700 3I/82.5	509 600 3I/82.5	565 400 3I/81.1			
	71	–	–	–	–	–	–	–	41 350 3I/72.8	60 000 3I/74.9	85 000 3I/74.6	122 000 3I/72.6	170 000 3I/74.5	242 200 3I/74.7	304 300 3I/75.3	384 700 3I/71	480 900 3I/71	554 400 3I/73			
	63	–	3070 3I/60.1	3 380 3I/62.6	5 540 3I/66.3	6 510 3I/66.3	13 800 3I/61.5	27 100 3I/60.2	39 500 3I/62	59 350 3I/63.5	79 950 3I/63.8	117 700 3I/62.6	168 100 3I/61.7	236 300 3I/61.5	306 300 3I/62.7	408 100 3I/67.1	510 100 3I/67.1	566 600 3I/66			
	56	–	–	–	–	–	–	–	40 800 3I/55.4	61 500 3I/55.5	75 850 3I/55.3	125 200 3I/54.1	177 300 3I/55.5	241 800 3I/55.6	296 100 3I/56	385 100 3I/57.8	481 400 3I/57.8	570 400 3I/59.4			
			2.83	3.3	5.87	6.9	12.2	25.1	34.8	51.9	69.6	99.7	144	204	259	343	429	483	50	2800	**56**
	50	–	3150 3I/49.4	3 830 3I/51.5	6 580 3I/49.8	7 750 3I/49.8	14 000 3I/51.2	28 000 3I/49.5	39 550 3I/50.4	59 350 3I/50.8	80 000 3I/51	118 000 3I/52.6	168 400 3I/51.8	236 800 3I/51.7	306 900 3I/52.7	408 000 3I/52.9▲	510 100 3I/52.9▲	565 200 3I/52▲			
									36.4	57.7	79	110	151	206	250	336	420	497	45	2500	
	45	–	–	–	–	–	–	–	41 350 3I/45.1	64 600 3I/44.4	88 050 3I/44.2	125 400 3I/45.4	177 700 3I/46.6	242 200 3I/46.7	296 700 3I/47.1	385 000 3I/45.5	481 300 3I/45.5	586 400 3I/46.8			
			2.83	2.83	4.57	5.32	12.6	23.6	37.5	60	74.2	112	158	212	256	330	413	500	40	2240	
	40	–	3 250 3I/40.8	3 390 3I/42.5	5 610 3I/43.6	6 520 3I/43.6	13 850 3I/39.1	27 150 3I/40.8	40 850 3I/38.7	65 000 3I/38.5	83 350 3I/39.9	131 100 3I/41.5	179 100 3I/40.4	253 600 3I/42.4	297 100 3I/41.2	378 700 3I/40.7	473 400 3I/40.7	594 100 3I/42.3			
									35	56.2	74.7	115	158	208	257	327	409	497	35.5	2000	
	35.5	–	–	–	–	–	–	–	41 400 3I/37.5	64 650 3I/36.5	85 550 3I/36.3	125 200 3I/34.4	176 400 3I/35.4	242 100 3I/36.9	301 100 3I/37.2	385 300 3I/37.4	481 700 3I/37.4	602 200 3I/38.4			
			2.69	2.9	5.74	6.76	11.9	23.3	34.9	59.6	69.4	119	147	216	268	330	411	502	31.5	1800	
	31.5	–	3150 3I/33.5	3550 3I/34.9	6 590 3I/32.8	7 750 3I/32.8	13 600 3I/32.6	27 350 3I/33.5	39 350 3I/32.2	65 950 3I/31.6	79 700 3I/32.8	130 800 3I/31.5	157 700 3I/30.6	253 400 3I/33.5	304 900 3I/32.5	386 500 3I/33.5	481 000 3I/33.5	609 800 3I/34.7			
							9.55		32.2	49.1	57.2	122	135	206	255	331	412	498	28	1600	
	28	–	–	–	–	–	10 850 2I/28.8	–	36 850 3I/29.1	54 900 3I/28.4	64 450 3I/28.6	130 700 3I/27.2	145 700 3I/27.3	233 100 3I/28.7	289 200 3I/28.8	392 000 3I/30	487 800 3I/30	593 800 3I/30.3			
		1.04	2.43	2.74	4.33	5	11.1	20.9	29.3	44.9	63.3	92	129	184	251	307	379	524	25	1400	
	25	1 140 2I/24.4	2 630 2I/24.1	3 090 2I/25.1	5 070 2I/26	5 850 2I/26	11 900 2I/23.7	22 650 2I/24.1	31 750 2I/24.1	49 750 2I/24.6	72 250 2I/25.4	100 400 2I/24.2	144 700 2I/25	206 800 2I/25	277 800 2I/24.6	345 500 2I/25	426 100 2I/25	607 300 2I/25.7			
									33.4	50	68.1	96.9	135	190	271	311	381	561	22.4	1250	
	22.4	–	–	–	–	–	–	–	36 500 2I/21.7	56 750 2I/22.5	80 150 2I/23.3	108 300 2I/22.2	156 800 2I/23	210 700 2I/22	302 900 2I/22.2	358 300 2I/22.8	438 500 2I/22.8	660 200 2I/23.4			
		1.18	2.99	3.01	5.03	5.81	12.7	25	35.8	51.1	68.5	103	149	213	271	329	439	583	20	1120	
	20	1 330 2I/20.1	3 240 2I/19.3	3 400 2I/20.1	5 890 2I/20.8	6 820 2I/20.8	13 800 2I/19.3	27 100 2I/19.3	39 550 2I/19.6	59 400 2I/20.7	80 050 2I/20.8	117 800 2I/20.3	168 200 2I/20	236 400 2I/19.7	306 400 2I/20.1	382 400 2I/20.6	509 700 2I/20.6	665 900 2I/20.3			
									37.3	56.7	72.7	113	156	216	306	354	440	642	18	1000	
	18	–	–	–	–	–	–	–	41 300 2I/17.6	64 650 2I/18.1	82 500 2I/18	125 300 2I/17.6	177 500 2I/18.1	241 800 2I/17.8	345 500 2I/17.9	396 300 2I/17.8	493 300 2I/17.8	739 800 2I/18.3			
		1.37	3.09	3.31	5.97	7.05	13.3	27.3	35.5	60.1	68.8	116	157	223	298	391	489	594	16	900	
	16	1 570 2I/16.3	3 430 2I/15.8	3 830 2I/16.5	6 550 2I/15.7	7 740 2I/15.7	15 000 2I/16.1	30 300 2I/15.8	37 400 2I/15.1	65 950 2I/15.7	80 050 2I/16.6	130 900 2I/16.1	171 600 2I/15.6	253 100 2I/16.2	327 800 2I/15.7	435 500 2I/15.9	544 400 2I/15.9	665 500 2I/16			
									31.6	58.6	77.1	120	136	183	262	418	522	652	14	800	
	14	–	–	–	–	–	–	–	36 550 2I/14.7	64 900 2I/14.1	87 500 2I/14.4	131 200 2I/13.9	156 700 2I/14.6	210 900 2I/14.6	303 300 2I/14.7	470 200 2I/14.3	587 800 2I/14.3	739 500 2I/14.4			

For n_1 lower than 560 rpm see page 107.
▲ Possible forced lubrication with heat exchanger: consult us.

$n_{N2} \cdot L_h$ rpm · h	i_N	Nominal output power P_{N2} [hp] / Nominal output torque T_{N2} [lb in] / Train of gears / ratio ... / i																	i_N	n_1 rpm	n_{N2}
		50	63	64	80	81	100	125	140	160	180	200	225	250	280	320	321	360			
710 000	12.5	1.44 1 570 2I/12.3	2.8 3 250 2I/13.1	2.82 3 410 2I/13.6	4.85 5 900 2I/13.7	5.61 6 820 2I/13.7	12.7 13 800 2I/12.3	23.4 27 200 2I/13.1	33.5 39 600 2I/13.3	49.3 59 450 2I/13.6	66.1 80 150 2I/13.6	103 117 900 2I/13	149 168 200 2I/12.8	204 236 700 2I/13.1	260 306 900 2I/13.3	323 382 800 2I/13.4	430 510 000 2I/13.4	571 666 400 2I/13.1	12.5	710	56
	11.2	–	–	–	–	–	–	–	34.8 41 400 2I/11.9	54.5 64 700 2I/11.9	73.9 87 500 2I/11.8	112 125 300 2I/11.2	152 175 000 2I/11.5	205 242 200 2I/11.8	291 346 000 2I/11.9	345 396 900 2I/11.5	429 494 000 2I/11.5	626 740 500 2I/11.8	11.2	630	
	10	1.52 1 750 2I/10.2	2.84 3 430 2I/10.7	3.05 3 840 2I/11.2	5.69 6 590 2I/10.3	6.69 7 750 2I/10.3	13 15 000 2I/10.2	25.1 30 350 2I/10.7	33.7 38 700 2I/10.2	57 66 050 2I/10.3	72.8 87 500 2I/10.7	114 131 000 2I/10.2	167 187 600 2I/9.95	210 253 700 2I/10.7	286 335 800 2I/10.4	376 436 000 2I/10.3	470 545 000 2I/10.3	607 730 000 2I/10.7	10	560	
630 000	160	–	–	–	–	–	10 300 3I/151	20 600 3I/153	–	–	–	–	–	–	–	–	–	–			
	125	–	–	–	–	–	12 500 3I/123	25 000 3I/123	31 900 3I/123	47 500 3I/128	67 000 3I/131	97 500 3I/119	132 000 3I/123	195 000 3I/125	265 000 3I/123	335 000 3I/127	400 000 3I/127	530 000 3I/131			
	100	–	–	–	–	–	12 800 3I/103	25 700 3I/101	38 700 3I/100	58 000 3I/107	80 450 3I/108	118 200 3I/100	160 000 3I/98.5	237 200 3I/98.5	307 500 3I/100	409 400 3I/105	487 000 3I/105	588 600 3I/103			
	90	–	–	–	–	–	–	–	40 000 3I/89.4	60 000 3I/93.7	76 250 3I/93.3	122 000 3I/86.4	170 000 3I/88.8	242 600 3I/89	313 200 3I/89.7	386 200 3I/90.1	482 700 3I/90.1	546 700 3I/92.7			
	80	–	2 640 3I/75.2	3 100 3I/78.2	4 680 3I/82.7	5 510 3I/82.7	11 500 3I/75.5	22 700 3I/75.3	39 700 3I/81.4	59 700 3I/85.7	80 450 3I/86.1	118 400 3I/84	169 000 3I/82.7	237 600 3I/82.7	308 000 3I/84.3	409 200 3I/82.5	511 500 3I/82.5	585 700 3I/81.1			
	71	–	–	–	–	–	–	–	41 500 3I/72.8	61 500 3I/74.9	88 550 3I/74.6	125 900 3I/72.6	175 000 3I/74.5	243 100 3I/74.7	315 300 3I/75.3	386 200 3I/71	482 700 3I/71	562 300 3I/73			
	63	–	3070 3I/60.1	3 390 3I/62.6	5 560 3I/66.3	6 540 3I/66.3	13 850 3I/61.5	27 200 3I/60.2	39 650 3I/62	59 550 3I/63.5	80 300 3I/63.8	118 200 3I/62.6	168 700 3I/61.7	237 200 3I/61.5	307 400 3I/62.7	409 600 3I/67.1	512 000 3I/67.1	587 300 3I/66			
	56	–	–	–	–	–	–	–	32.9 40 950 3I/55.4	50.4 63 000 3I/55.5	61.2 76 150 3I/55.3	103 125 700 3I/54.1	142 178 000 3I/55.5	194 242 600 3I/55.6	243 306 800 3I/56	297 386 500 3I/57.8▲	372 483 200 3I/57.8▲	433 578 500 3I/59.4▲	56	2800	50
	50	–	2.53 3150 3I/49.4	2.96 3 850 3I/51.5	5.26 6 610 3I/49.8	6.18 7 770 3I/49.8	10.9 14 000 3I/51.2	22.4 28 000 3I/49.5	31.2 39 700 3I/50.4	46.5 59 600 3I/50.8	62.4 80 300 3I/51	89.3 118 400 3I/52.6	129 169 000 3I/51.8	182 237 600 3I/51.7	232 308 000 3I/52.7	307 409 500 3I/52.9	384 511 900 3I/52.9	446 584 800 3I/52	50	2500	
	45	–	–	–	–	–	–	–	32.7 41 500 3I/45.1	51.9 64 800 3I/44.4	71 88 350 3I/44.2	98.5 125 800 3I/45.4	136 178 300 3I/46.6	185 243 000 3I/46.7	232 306 700 3I/47.1	302 386 300 3I/45.5	377 482 900 3I/45.5	451 594 100 3I/46.8	45	2240	
	40	–	2.54 3 260 3I/40.8	2.54 3 400 3I/42.5	4.14 5 680 3I/43.6	4.79 6 570 3I/43.6	11.3 13 900 3I/39.1	21.2 27 250 3I/40.8	33.6 41 000 3I/38.7	54.5 66 150 3I/38.5	66.5 83 650 3I/39.9	100 131 500 3I/41.5	141 179 800 3I/40.4	190 254 500 3I/42.4	232 301 100 3I/41.2	305 391 800 3I/40.7	382 489 800 3I/40.7	452 602 200 3I/42.3	40	2000	
	35.5	–	–	–	–	–	–	–	31.6 41 550 3I/37.5	50.8 64 850 3I/36.5	69.4 88 300 3I/36.3	104 125 600 3I/34.4	144 178 000 3I/35.4	188 242 900 3I/36.9	234 304 900 3I/37.2	295 386 600 3I/37.4	369 483 300 3I/37.4	453 609 800 3I/38.4	35.5	1800	
	31.5	–	2.45 3 230 3I/33.5	2.65 3 650 3I/34.9	5.12 6 610 3I/32.8	6.03 7 780 3I/32.8	10.6 13 600 3I/32.6	21.5 28 350 3I/33.5	32.2 40 800 3I/32.2	53.2 66 200 3I/31.6	63.9 82 600 3I/32.8	106 131 300 3I/31.5	135 163 400 3I/30.6	193 254 400 3I/33.5	241 309 200 3I/32.5	297 392 000 3I/33.5	370 487 800 3I/33.5	452 618 500 3I/34.7	31.5	1600	
	28	–	–	–	–	–	8.39 10 900 2I/28.8	–	29.3 38 350 3I/29.1	43.6 55 750 3I/28.4	50.9 65 450 3I/28.6	107 131 700 3I/27.2	123 151 700 3I/27.3	188 242 700 3I/28.7	226 293 900 3I/28.8	295 398 300 3I/30	367 495 600 3I/30	443 603 400 3I/30.3	28	1400	
	25	0.93 1 140 2I/24.4	2.18 2 640 2I/24.1	2.46 3 110 2I/25.1	3.88 5 080 2I/26	4.48 5 870 2I/26	9.98 11 950 2I/23.7	18.7 22 750 2I/24.1	26.2 31 850 2I/24.1	40.2 49 950 2I/24.6	56.7 72 500 2I/25.4	82.4 100 800 2I/24.2	115 145 200 2I/25	165 207 500 2I/25	225 278 800 2I/24.6	284 357 400 2I/25	339 427 600 2I/25	469 609 500 2I/25.7	25	1250	

For n_1 lower than 560 rpm see page 107.
▲ Possible forced lubrication with heat exchanger: consult us.

$n_{N2} \cdot L_h$ rpm · h	i_N	Nominal output power P_{N2} [hp] / Nominal output torque T_{N2} [lb in] / Train of gears / ratio ... / i																	i_N	n_1 rpm	n_{N2}
		50	63	64	80	81	100	125	140	160	180	200	225	250	280	320	321	360			
630 000	22.4	–	–	–	–	–	–	–	30 36 600 2I/21.7	45 56 950 2I/22.5	61.2 80 400 2I/23.3	87.2 108 700 2I/22.2	122 157 300 2I/23	171 211 400 2I/22	244 304 000 2I/22.2	283 363 300 2I/22.8	342 440 000 2I/22.8	504 662 500 2I/23.4	22.4	1120	50
	20	1.05 1 330 2I/20.1	2.68 3 260 2I/19.3	2.7 3 410 2I/20.1	4.5 5 910 2I/20.8	5.21 6 840 2I/20.8	11.4 13 850 2I/19.3	22.4 27 200 2I/19.3	32 39 650 2I/19.6	45.8 59 600 2I/20.7	61.4 80 350 2I/20.8	92.2 118 300 2I/20.3	134 168 800 2I/20	191 237 200 2I/19.7	243 307 500 2I/20.1	296 384 800 2I/20.6	393 511 500 2I/20.6	522 668 300 2I/20.3	20	1000	
	18	–	–	–	–	–	–	–	33.7 41 450 2I/17.6	51.2 64 850 2I/18.1	65.7 82 800 2I/18	102 125 700 2I/17.6	141 178 100 2I/18.1	195 242 600 2I/17.8	276 346 600 2I/17.9	320 398 300 2I/17.8	398 495 600 2I/17.8	580 742 300 2I/18.3	18	900	
	16	1.22 1 580 2I/16.3	2.75 3 430 2I/15.8	2.96 3 850 2I/16.5	5.32 6 570 2I/15.7	6.29 7 770 2I/15.7	11.8 15 000 2I/16.1	24.4 30 400 2I/15.8	31.6 37 500 2I/15.1	53.6 66 200 2I/15.7	61.4 80 350 2I/16.6	104 131 400 2I/16.1	140 172 200 2I/15.6	199 254 100 2I/16.2	266 329 000 2I/15.7	349 437 000 2I/15.9	436 546 400 2I/15.9	530 668 000 2I/16	16	800	
	14	–	–	–	–	–	–	–	28.1 36 700 2I/14.7	52.2 65 150 2I/14.1	68.4 87 500 2I/14.4	107 131 700 2I/13.9	121 157 300 2I/14.6	163 211 700 2I/14.6	233 304 400 2I/14.7	372 472 000 2I/14.3	465 590 000 2I/14.3	581 742 300 2I/14.4	14	710	
	12.5	1.28 1 570 2I/12.3	2.5 3 260 2I/13.1	2.51 3 420 2I/13.6	4.32 5 920 2I/13.7	5 6 850 2I/13.7	11.3 13 850 2I/12.3	20.8 27 200 2I/13.1	29.8 39 750 2I/13.3	43.9 59 700 2I/13.6	58.9 80 450 2I/13.6	91.3 118 300 2I/13	132 168 900 2I/12.8	182 237 600 2I/13.1	231 308 000 2I/13.3	288 385 400 2I/13.4	383 511 900 2I/13.4	509 668 900 2I/13.1	12.5	630	
	11.2	–	–	–	–	–	–	–	31 41 550 2I/11.9	48.6 64 950 2I/11.9	65.7 87 500 2I/11.8	99.9 125 800 2I/11.2	135 175 000 2I/11.5	183 243 000 2I/11.8	259 347 300 2I/11.9	308 398 300 2I/11.5	383 495 600 2I/11.5	558 743 200 2I/11.8	11.2	560	
560 000	160	–	–	–	–	–	10 600 3I/151	21 200 3I/153	–	–	–	–	–	–	–	–	–	–			
	125	–	–	–	–	–	12 800 3I/123	25 700 3I/123	32 000 3I/123	48 700 3I/128	69 000 3I/131	101 100 3I/119	136 000 3I/123	200 000 3I/125	279 800 3I/123	345 000 3I/127	412 000 3I/127	545 000 3I/131			
	100	–	–	–	–	–	13 200 3I/103	26 500 3I/101	38 700 3I/100	58 000 3I/107	80 700 3I/108	118 600 3I/100	165 000 3I/98.5	238 000 3I/98.5	308 500 3I/100	410 700 3I/105	500 000 3I/105	607 500 3I/103			
	90	–	–	–	–	–	–	–	41 100 3I/89.4	60 000 3I/93.7	76 550 3I/93.3	122 000 3I/86.4	170 000 3I/88.8	243 500 3I/89	324 500 3I/89.7	387 600 3I/90.1	484 500 3I/90.1	566 400 3I/92.7			
	80	–	2 650 3I/75.2	3 120 3I/78.2	4 700 3I/82.7	5 530 3I/82.7	12 000 3I/75.5	22 800 3I/75.3	39 850 3I/81.4	59 900 3I/85.7	80 750 3I/86.1	118 800 3I/84	169 600 3I/82.7	238 500 3I/82.7	309 100 3I/84.3	410 700 3I/82.5	513 400 3I/82.5	607 100 3I/81.1			
	71	–	–	–	–	–	–	–	41 650 3I/72.8	61 500 3I/74.9	88 850 3I/74.6	126 400 3I/72.6	179 000 3I/74.5	244 000 3I/74.7	326 900 3I/75.3	387 600 3I/71	484 500 3I/71	570 400 3I/73			
	63	–	2.33 3150 3I/60.1	2.41 3 400 3I/62.6	3.74 5 580 3I/66.3	4.4 6 560 3I/66.3	10.1 13 950 3I/61.5	20.1 27 300 3I/60.2	28.6 39 800 3I/62	41.8 59 800 3I/63.5	56.1 80 550 3I/63.8	84.2 118 600 3I/62.6	122 169 300 3I/61.7	172 238 100 3I/61.5	219 308 600 3I/62.7	272 411 100 3I/67.1▲	340 513 900 3I/67.1▲	410 608 400 3I/66▲	63	2800	45
	56	–	–	–	–	–	–	–	29.5 41 100 3I/55.4	45 63 000 3I/55.5	54.8 76 450 3I/55.3	92.5 126 100 3I/54.1	128 178 600 3I/55.5	174 243 500 3I/55.6	225 317 400 3I/56	266 387 900 3I/57.8	333 484 900 3I/57.8	392 586 400 3I/59.4	56	2500	
	50	–	2.34 3250 3I/49.4	2.66 3 860 3I/51.5	4.73 6 630 3I/49.8	5.56 7 800 3I/49.8	10.1 14 500 3I/51.2	20.8 29 000 3I/49.5	28.1 39 850 3I/50.4	41.8 59 800 3I/50.8	56.1 80 550 3I/51	80.3 118 800 3I/52.6	116 169 600 3I/51.8	164 238 400 3I/51.7	209 309 000 3I/52.7	276 410 900 3I/52.9	345 513 700 3I/52.9	413 604 400 3I/52	50	2240	
	45	–	–	–	–	–	–	–	29.3 41 650 3I/45.1	46.5 65 050 3I/44.4	63.6 88 650 3I/44.2	88.2 126 300 3I/45.4	122 178 900 3I/46.6	166 243 900 3I/46.7	214 317 300 3I/47.1	270 387 700 3I/45.5	338 484 600 3I/45.5	408 602 200 3I/46.8	45	2000	
	40	–	2.29 3 270 3I/40.8	2.29 3 410 3I/42.5	3.77 5 750 3I/43.6	4.36 6 660 3I/43.6	10.2 13 900 3I/39.1	19.1 27 350 3I/40.8	30.4 41 100 3I/38.7	49.2 66 400 3I/38.5	60 83 900 3I/39.9	90.7 132 000 3I/41.5	128 180 400 3I/40.4	172 255 300 3I/42.4	211 304 900 3I/41.2	284 404 400 3I/40.7	354 505 500 3I/40.7	412 609 800 3I/42.3	40	1800	

For n_1 lower than 560 rpm see page 107.
▲ Possible forced lubrication with heat exchanger: consult us.

$n_{N2} \cdot L_h$ rpm · h	i_N	50	63	64	80	81	100	125	140	160	180	200	225	250	280	320	321	360	i_N	n_1 rpm	n_{N2}
		Nominal output power P_{N2} [hp] Nominal output torque T_{N2} [lb in] Train of gears / ratio ... / i																			
560 000	35.5	–	–	–	–	–	–	–	28.2 41 700 3I/37.5	45.3 65 100 3I/36.5	62 88 750 3I/36.3	93 126 100 3I/34.4	128 178 600 3I/35.4	168 243 800 3I/36.9	211 309 200 3I/37.2	266 392 000 3I/37.4	331 487 800 3I/37.4	408 618 500 3I/38.4	35.5	1600	45
	31.5	–	2.14 3 230 3I/33.5	2.32 3 650 3I/34.9	4.5 6 640 3I/32.8	5.3 7 810 3I/32.8	9.28 13 600 3I/32.6	19 28 750 3I/33.5	29.3 42 450 3I/32.2	46.7 66 500 3I/31.6	58.2 85 950 3I/32.8	93 131 900 3I/31.5	123 170 100 3I/30.6	169 255 400 3I/33.5	214 314 200 3I/32.5	267 402 700 3I/33.5	334 503 400 3I/33.5	402 628 400 3I/34.7	31.5	1400	
	28	–	–	–	–	–	7.52 10 950 2I/28.8	–	27.1 39 700 3I/29.1	39 55 750 3I/28.4	45.7 65 900 3I/28.6	96.3 132 200 3I/27.2	114 156 900 3I/27.3	173 251 100 3I/28.7	204 296 100 3I/28.8	263 398 300 3I/30	327 495 600 3I/30	398 607 000 3I/30.3	28	1250	
	25	0.84 1 150 2I/24.4	1.96 2 650 2I/24.1	2.21 3 120 2I/25.1	3.49 5 100 2I/26	4.03 5 890 2I/26	8.97 11 950 2I/23.7	16.8 22 800 2I/24.1	23.6 32 000 2I/24.1	36.2 50 100 2I/24.6	51 72 800 2I/25.4	74.1 101 100 2I/24.2	104 145 800 2I/25	148 208 200 2I/25	202 279 800 2I/24.6	259 364 800 2I/25	305 429 100 2I/25	422 611 600 2I/25.7	25	1120	
	22.4	–	–	–	–	–	–	–	26.9 36 750 2I/21.7	40.3 57 150 2I/22.5	54.9 80 700 2I/23.3	78.1 109 000 2I/22.2	109 157 900 2I/23	153 212 200 2I/22	218 305 000 2I/22.2	261 375 400 2I/22.8	307 441 600 2I/22.8	452 664 900 2I/23.4	22.4	1000	
	20	0.95 1 340 2I/20.1	2.42 3 270 2I/19.3	2.43 3 420 2I/20.1	4.06 5 930 2I/20.8	4.7 6 860 2I/20.8	10.3 13 900 2I/19.3	20.2 27 300 2I/19.3	28.9 39 800 2I/19.6	41.3 59 800 2I/20.7	55.4 80 600 2I/20.8	83.3 118 700 2I/20.3	121 169 400 2I/20	173 238 000 2I/19.7	219 308 500 2I/20.1	267 386 800 2I/20.6	355 513 200 2I/20.6	471 670 500 2I/20.3	20	900	
	18	–	–	–	–	–	–	–	30.1 41 600 2I/17.6	45.7 65 100 2I/18.1	58.6 83 100 2I/18	91.1 126 200 2I/17.6	126 178 700 2I/18.1	174 243 500 2I/17.8	246 347 900 2I/17.9	284 398 300 2I/17.8	354 495 600 2I/17.8	517 745 100 2I/18.3	18	800	
	16	1.09 1 580 2I/16.3	2.44 3 430 2I/15.8	2.63 3 860 2I/16.5	4.74 6 590 2I/15.7	5.61 7 800 2I/15.7	10.5 15 000 2I/16.1	21.7 30 500 2I/15.8	28.1 37 500 2I/15.1	47.8 66 450 2I/15.7	54.7 80 650 2I/16.6	92.4 131 900 2I/16.1	125 172 900 2I/15.6	178 255 000 2I/16.2	237 330 200 2I/15.7	309 437 000 2I/15.9	388 548 400 2I/15.9	472 670 500 2I/16	16	710	
	14	–	–	–	–	–	–	–	25 36 850 2I/14.7	46.5 65 400 2I/14.1	60.7 87 500 2I/14.4	94.9 132 000 2I/13.9	108 157 900 2I/14.6	146 212 500 2I/14.6	208 305 500 2I/14.7	332 473 800 2I/14.3	415 592 200 2I/14.3	517 745 100 2I/14.4	14	630	
	12.5	1.14 1 580 2I/12.3	2.23 3 280 2I/13.1	2.24 3 430 2I/13.6	3.85 5 930 2I/13.7	4.45 6 860 2I/13.7	10.1 13 950 2I/12.3	18.5 27 200 2I/13.1	26.6 39 900 2I/13.3	39.2 59 900 2I/13.6	52.6 80 750 2I/13.6	81.5 118 700 2I/13	118 169 500 2I/12.8	162 238 500 2I/13.1	206 309 200 2I/13.3	257 386 800 2I/13.4	342 513 800 2I/13.4	453 670 000 2I/13.1	12.5	560	
500 000	160	–	–	–	–	–	10 900 3I/151	21 800 3I/153	–	–	–	–	–	–	–	–	–	–			
	125	–	–	–	–	–	12 800 3I/123	25 700 3I/123	32 100 3I/123	50 350 3I/128	69 000 3I/131	101 400 3I/119	140 000 3I/123	200 000 3I/125	280 800 3I/123	345 000 3I/127	412 000 3I/127	560 000 3I/131			
	100	–	–	–	–	–	13 200 3I/103	26 500 3I/101	39 950 3I/100	58 000 3I/107	81 000 3I/108	119 000 3I/100	169 900 3I/98.5	238 900 3I/98.5	309 700 3I/100	412 300 3I/105	515 300 3I/105	629 300 3I/103			
	90	–	–	–	–	–	–	–	41 250 3I/89.4	61 500 3I/93.7	76 850 3I/93.3	126 600 3I/86.4	175 000 3I/88.8	244 400 3I/89	336 300 3I/89.7	389 100 3I/90.1	486 300 3I/90.1	587 100 3I/92.7			
	80	–	2 660 3I/75.2	3 130 3I/78.2	4 720 3I/82.7	5 550 3I/82.7	12 000 3I/75.5	22 900 3I/75.3	40 000 3I/81.4	60 150 3I/85.7	81 050 3I/86.1	119 300 3I/84	170 300 3I/82.7	239 400 3I/82.7	310 300 3I/84.3	412 300 3I/82.5	515 300 3I/82.5	629 200 3I/81.1			
	71	–	–	–	–	–	–	–	25.5 41 800 3I/72.8	37.3 63 000 3I/74.9	53.1 89 200 3I/74.6	77.6 126 800 3I/72.6	107 179 700 3I/74.5	146 244 900 3I/74.7	200 338 600 3I/75.3	243 389 000 3I/71	304 486 300 3I/71	357 586 700 3I/73	71	2800	40
	63	–	2.08 3150 3I/60.1	2.16 3 420 3I/62.6	3.35 5 600 3I/66.3	3.94 6 590 3I/66.3	9.02 14 000 3I/61.5	18.1 27 400 3I/60.2	25.6 39 950 3I/62	37.5 60 000 3I/63.5	50.3 80 850 3I/63.8	75.4 119 000 3I/62.6	109 169 900 3I/61.7	154 238 900 3I/61.5	196 309 700 3I/62.7	244 412 600 3I/67.1	305 515 700 3I/67.1	378 629 400 3I/66	63	2500	
	56	–	–	–	–	–	–	–	26.5 41 250 3I/55.4	41.8 65 300 3I/55.5	49.3 76 700 3I/55.3	83.1 126 500 3I/54.1	115 179 300 3I/55.5	156 244 400 3I/55.6	208 328 000 3I/56	240 389 200 3I/57.8	299 486 600 3I/57.8	355 594 100 3I/59.4	56	2240	

For n_1 lower than 560 rpm see page 107.

$n_{N2} \cdot L_h$ rpm · h	i_N	Nominal output power P_{N2} [hp] / Nominal output torque T_{N2} [lb in] / Train of gears / ratio ... / i																		i_N	n_1 rpm	n_{N2}
		50	63	64	80	81	100	125	140	160	180	200	225	250	280	320	321	360				
500 000	50	–	2.09 3250 3I/49.4	2.39 3 870 3I/51.5	4.24 6 650 3I/49.8	4.98 7 830 3I/49.8	8.99 14 500 3I/51.2	18.6 29 000 3I/49.5	25.1 40 000 3I/50.4	37.5 60 000 3I/50.8	50.3 80 850 3I/51	72 119 200 3I/52.6	104 170 200 3I/51.8	147 239 300 3I/51.7	187 310 200 3I/52.7	248 412 400 3I/52.9	309 515 500 3I/52.9	382 625 300 3I/52	50	2000	**40**
	45	–	–	–	–	–	–	–	26.5 41 750 3I/45.1	42 65 250 3I/44.4	57.4 88 950 3I/44.2	79.7 126 700 3I/45.4	110 179 500 3I/46.6	150 244 700 3I/46.7	199 327 500 3I/47.1	244 389 000 3I/45.5	305 486 300 3I/45.5	372 609 800 3I/46.8	45	1800	
	40	–	2.04 3 280 3I/40.8	2.05 3 420 3I/42.5	3.4 5 840 3I/43.6	3.93 6 750 3I/43.6	9.07 13 950 3I/39.1	17.1 27 450 3I/40.8	27.1 41 250 3I/38.7	43.9 66 650 3I/38.5	53.5 84 200 3I/39.9	80.9 132 500 3I/41.5	114 181 000 3I/40.4	153 256 300 3I/42.4	191 309 200 3I/41.2	261 419 000 3I/40.7	326 523 700 3I/40.7	372 618 500 3I/42.3	40	1600	
	35.5	–	–	–	–	–	–	–	24.8 41 850 3I/37.5	39.8 65 400 3I/36.5	54.5 89 100 3I/36.3	81.7 126 600 3I/34.4	113 179 400 3I/35.4	147 244 800 3I/36.9	188 314 300 3I/37.2	237 398 300 3I/37.4	295 495 600 3I/37.4	363 628 400 3I/38.4	35.5	1400	
	31.5	–	1.91 3 230 3I/33.5	2.07 3 650 3I/34.9	4.03 6 660 3I/32.8	4.75 7 840 3I/32.8	8.28 13 600 3I/32.6	17 28 750 3I/33.5	27.1 43 900 3I/32.2	41.9 66 750 3I/31.6	53.8 88 950 3I/32.8	83.3 132 300 3I/31.5	114 176 000 3I/30.6	152 256 400 3I/33.5	191 314 200 3I/32.5	247 416 700 3I/33.5	309 520 800 3I/33.5	359 628 400 3I/34.7	31.5	1250	
	28	–	–	–	–	–	6.76 10 950 2I/28.8	–	25.1 41 000 3I/29.1	34.9 55 750 3I/28.4	41.2 66 250 3I/28.6	86.6 132 600 3I/27.2	106 162 200 3I/27.3	161 259 500 3I/28.7	184 298 100 3I/28.8	236 398 300 3I/30	293 495 600 3I/30	359 610 600 3I/30.3	28	1120	
	25	0.75 1 150 2I/24.4	1.75 2 660 2I/24.1	1.98 3 130 2I/25.1	3.12 5 120 2I/26	3.61 5 910 2I/26	8.04 12 000 2I/23.7	15.1 22 900 2I/24.1	21.1 32 100 2I/24.1	32.4 50 300 2I/24.6	45.7 73 050 2I/25.4	66.4 101 500 2I/24.2	93 146 300 2I/25	133 209 000 2I/25	181 280 800 2I/24.6	232 366 100 2I/25	273 430 700 2I/25	378 613 800 2I/25.7	25	1000	
	22.4	–	–	–	–	–	–	–	24.3 36 850 2I/21.7	36.4 57 350 2I/22.5	49.6 80 950 2I/23.3	70.5 109 400 2I/22.2	98.4 158 400 2I/23	138 212 900 2I/22	197 306 100 2I/22.2	235 376 600 2I/22.8	277 443 100 2I/22.8	408 667 100 2I/23.4	22.4	900	
	20	0.85 1 340 2I/20.1	2.16 3 280 2I/19.3	2.17 3 430 2I/20.1	3.61 5 930 2I/20.8	4.18 6 860 2I/20.8	9.18 13 950 2I/19.3	18.1 27 400 2I/19.3	25.8 39 950 2I/19.6	36.9 60 050 2I/20.7	49.4 80 900 2I/20.8	74.3 119 100 2I/20.3	108 170 000 2I/20	154 238 900 2I/19.7	196 309 700 2I/20.1	241 391 300 2I/20.6	317 515 100 2I/20.6	421 673 000 2I/20.3	20	800	
	18	–	–	–	–	–	–	–	26.8 41 750 2I/17.6	40.7 65 350 2I/18.1	52.2 83 400 2I/18	81.1 126 600 2I/17.6	112 179 400 2I/18.1	155 244 400 2I/17.8	219 349 200 2I/17.9	252 398 300 2I/17.8	314 495 600 2I/17.8	461 747 900 2I/18.3	18	710	
	16	0.97 1 590 2I/16.3	2.16 3 430 2I/15.8	2.34 3 870 2I/16.5	4.22 6 620 2I/15.7	4.99 7 830 2I/15.7	9.32 15 000 2I/16.1	19.3 30 550 2I/15.8	24.9 37 500 2I/15.1	42.6 66 700 2I/15.7	48.7 80 950 2I/16.6	82 132 000 2I/16.1	111 173 500 2I/15.6	158 256 000 2I/16.2	211 331 500 2I/15.7	275 437 000 2I/15.9	346 550 500 2I/15.9	420 673 000 2I/16	16	630	
	14	–	–	–	–	–	–	–	22.3 36 950 2I/14.7	41.5 65 650 2I/14.1	54 87 500 2I/14.4	84.4 132 000 2I/13.9	96.3 158 500 2I/14.6	130 213 300 2I/14.6	185 306 700 2I/14.7	296 475 500 2I/14.3	370 594 400 2I/14.3	461 747 800 2I/14.4	14	560	
450 000	160	–	–	–	–	–	11 200 3I/151	22 400 3I/153	–	–	–	–	–	–	–	–	–	–			
	125	–	–	–	–	–	13 200 3I/123	26 500 3I/123	32 200 3I/123	50 550 3I/128	71 000 3I/131	101 800 3I/119	140 000 3I/123	209 700 3I/125	281 700 3I/123	355 000 3I/127	432 300 3I/127	560 000 3I/131			
	100	–	–	–	–	–	13 600 3I/103	27 200 3I/101	40 100 3I/100	60 350 3I/107	81 300 3I/108	119 500 3I/100	170 600 3I/98.5	239 800 3I/98.5	310 800 3I/100	413 800 3I/105	517 300 3I/105	652 300 3I/103			
	90	–	–	–	–	–	–	–	41 400 3I/89.4	61 500 3I/93.7	77 150 3I/93.3	127 100 3I/86.4	180 000 3I/88.8	245 400 3I/89	348 600 3I/89.7	390 500 3I/90.1	488 200 3I/90.1	608 500 3I/92.7			
	80	–	1.58 2 670 3I/75.2	1.78 3 140 3I/78.2	2.54 4 740 3I/82.7	2.99 5 570 3I/82.7	7.1 12 050 3I/75.5	13.6 22 950 3I/75.3	21.9 40 150 3I/81.4	31.3 60 350 3I/85.7	42 81 350 3I/86.1	63.3 119 700 3I/84	91.7 170 900 3I/82.7	129 240 300 3I/82.7	164 311 500 3I/84.3	223 413 800 3I/82.5	279 517 300 3I/82.5	357 651 900 3I/81.1	80	2800	**35.5**
	71	–	–	–	–	–	–	–	22.9 41 950 3I/72.8	33.3 63 000 3I/74.9	47.6 89 500 3I/74.6	69.6 127 300 3I/72.6	96 180 300 3I/74.5	130 245 800 3I/74.7	185 350 300 3I/75.3	218 390 400 3I/71	273 488 000 3I/71	330 607 000 3I/73	71	2500	

For n_1 lower than 560 rpm see page 107.

$n_{N2} \cdot L_h$ rpm · h	i_N	50	63	64	80	81	100	125	140	160	180	200	225	250	280	320	321	360	i_N	n_1 rpm	n_{N2}
		Nominal output power P_{N2} [hp] / Nominal output torque T_{N2} [lb in] / Train of gears / ratio … / i																			
450 000	63	–	1.94 3 290 3I/60.1	1.94 3 430 3I/62.6	3.01 5 620 3I/66.3	3.54 6 610 3I/66.3	8.11 14 000 3I/61.5	16.2 27 500 3I/60.2	23 40 100 3I/62	33.7 60 200 3I/63.5	45.2 81 150 3I/63.8	67.8 119 400 3I/62.6	98.3 170 500 3I/61.7	138 239 700 3I/61.5	176 310 800 3I/62.7	219 414 000 3I/67.1	274 517 500 3I/67.1	350 650 500 3I/66	63	2240	**35.5**
	56	–	–	–	–	–	–	–	23.7 41 400 3I/55.4	37.4 65 500 3I/55.5	44.2 76 950 3I/55.3	74.5 127 000 3I/54.1	103 179 900 3I/55.5	140 245 200 3I/55.6	192 339 400 3I/56	215 390 600 3I/57.8	268 488 300 3I/57.8	324 605 700 3I/59.4	56	2000	
	50	–	1.94 3350 3I/49.4	2.15 3 890 3I/51.5	3.82 6 680 3I/49.8	4.5 7 850 3I/49.8	8.09 14 500 3I/51.2	16.7 29 000 3I/49.5	22.7 40 100 3I/50.4	33.9 60 200 3I/50.8	45.4 81 150 3I/51	65 119 600 3I/52.6	94.2 170 700 3I/51.8	133 240 100 3I/51.7	169 311 200 3I/52.7	224 413 800 3I/52.9	279 517 200 3I/52.9	354 645 400 3I/52	50	1800	
	45	–	–	–	–	–	–	–	23.6 41 950 3I/45.1	37.4 65 500 3I/44.4	51.3 89 300 3I/44.2	71.1 127 200 3I/45.4	98.1 180 200 3I/46.6	134 245 600 3I/46.7	183 339 200 3I/47.1	219 392 000 3I/45.5	272 488 100 3I/45.5	335 618 500 3I/46.8	45	1600	
	40	–	1.8 3 300 3I/40.8	1.8 3 440 3I/42.5	3.02 5 930 3I/43.6	3.5 6 860 3I/43.6	7.97 14 050 3I/39.1	15 27 600 3I/40.8	23.8 41 450 3I/38.7	38.6 66 900 3I/38.5	47 84 550 3I/39.9	71.1 133 000 3I/41.5	100 181 800 3I/40.4	135 257 300 3I/42.4	170 314 200 3I/41.2	238 436 100 3I/40.7	297 545 100 3I/40.7	330 628 400 3I/42.3	40	1400	
	35.5	–	–	–	–	–	–	–	22.2 42 000 3I/37.5	35.7 65 600 3I/36.5	48.8 89 450 3I/36.3	73.2 127 100 3I/34.4	101 180 000 3I/35.4	132 245 700 3I/36.9	173 325 200 3I/37.2	211 398 300 3I/37.4	263 495 600 3I/37.4	324 628 400 3I/38.4	35.5	1250	
	31.5	–	1.71 3 230 3I/33.5	1.85 3 650 3I/34.9	3.63 6 690 3I/32.8	4.27 7 870 3I/32.8	7.42 13 600 3I/32.6	15.2 28 750 3I/33.5	24.8 45 000 3I/32.2	37.6 66 950 3I/31.6	49.8 91 900 3I/32.8	74.9 132 800 3I/31.5	106 181 800 3I/30.6	136 257 200 3I/33.5	172 314 200 3I/32.5	229 430 600 3I/33.5	286 538 300 3I/33.5	322 628 400 3I/34.7	31.5	1120	
	28	–	–	–	–	–	6.05 11 000 2I/28.8	–	21.8 40 000 3I/29.1	31.2 55 750 3I/28.4	37 66 700 3I/28.6	77.6 133 100 3I/27.2	97.5 167 800 3I/27.3	145 262 400 3I/28.7	165 300 300 3I/28.8	211 399 900 3I/30	264 499 900 3I/30	322 614 200 3I/30.3	28	1000	
	25	0.68 1 160 2I/24.4	1.58 2 670 2I/24.1	1.79 3 140 2I/25.1	2.82 5 130 2I/26	3.26 5 930 2I/26	7.26 12 050 2I/23.7	13.6 22 950 2I/24.1	19.1 32 200 2I/24.1	29.3 50 450 2I/24.6	41.3 73 300 2I/25.4	60 101 800 2I/24.2	83.9 146 800 2I/25	120 209 700 2I/25	163 281 700 2I/24.6	210 367 300 2I/25	247 432 100 2I/25	342 615 800 2I/25.7	25	900	
	22.4	–	–	–	–	–	–	–	21.7 37 000 2I/21.7	32.5 57 550 2I/22.5	44.2 81 250 2I/23.3	62.9 109 800 2I/22.2	87.8 159 000 2I/23	123 213 700 2I/22	176 307 200 2I/22.2	210 378 000 2I/22.8	247 444 700 2I/22.8	364 669 500 2I/23.4	22.4	800	
	20	0.76 1 350 2I/20.1	1.92 3 290 2I/19.3	1.92 3 430 2I/20.1	3.21 5 930 2I/20.8	3.71 6 860 2I/20.8	8.17 14 000 2I/19.3	16.1 27 500 2I/19.3	23 40 100 2I/19.6	32.8 60 250 2I/20.7	44 81 200 2I/20.8	66.2 119 500 2I/20.3	95.9 170 600 2I/20	137 239 800 2I/19.7	174 310 800 2I/20.1	221 405 600 2I/20.6	282 517 000 2I/20.6	375 675 600 2I/20.3	20	710	
	18	–	–	–	–	–	–	–	23.9 41 900 2I/17.6	36.3 65 600 2I/18.1	46.5 83 700 2I/18	72.3 127 100 2I/17.6	99.7 180 000 2I/18.1	138 245 400 2I/17.8	195 350 500 2I/17.9	224 398 300 2I/17.8	279 495 600 2I/17.8	410 750 000 2I/18.3	18	630	
	16	0.87 1 590 2I/16.3	1.92 3 430 2I/15.8	2.08 3 870 2I/16.5	3.77 6 640 2I/15.7	4.46 7 860 2I/15.7	8.29 15 000 2I/16.1	17.1 30 550 2I/15.8	22.1 37 500 2I/15.1	38 66 950 2I/15.7	43.4 81 250 2I/16.6	72.9 132 000 2I/16.1	98.9 174 200 2I/15.6	141 257 000 2I/16.2	188 332 700 2I/15.7	244 437 000 2I/15.9	309 552 500 2I/15.9	375 675 500 2I/16	16	560	
400 000	160	–	–	–	–	–	11 200 3I/151	23 050 3I/153	–	–	–	–	–	–	–	–	–	–			
	125	–	–	–	–	–	13 200 3I/123	26 500 3I/123	32 350 3I/123	50 700 3I/128	71 000 3I/131	102 100 3I/119	145 000 3I/123	210 400 3I/125	282 800 3I/123	355 000 3I/127	433 900 3I/127	580 000 3I/131			
	100	–	–	–	–	–	13 600 3I/103	27 200 3I/101	40 250 3I/100	60 550 3I/107	81 600 3I/108	119 900 3I/100	171 200 3I/98.5	240 700 3I/98.5	312 000 3I/100	415 400 3I/105	519 200 3I/105	676 100 3I/103			
	90	–	–	–	–	–	–	–	20.7 41 600 3I/89.4	29.9 63 000 3I/93.7	36.9 77 400 3I/93.3	65.5 127 500 3I/86.4	90.4 180 700 3I/88.8	123 246 300 3I/89	174 351 800 3I/89.7	193 392 000 3I/90.1	242 490 000 3I/90.1	302 630 400 3I/92.7	90	2800	**31.5**
	80	–	1.41 2 680 3I/75.2	1.6 3 150 3I/78.2	2.3 4 790 3I/82.7	2.68 5 590 3I/82.7	6.36 12 100 3I/75.5	12.1 23 050 3I/75.3	19.6 40 300 3I/81.4	28 60 550 3I/85.7	37.6 81 650 3I/86.1	56.7 120 100 3I/84	82.2 171 500 3I/82.7	116 241 200 3I/82.7	147 312 600 3I/84.3	200 415 300 3I/82.5	250 519 100 3I/82.5	330 674 400 3I/81.1	80	2500	

For n_1 lower than 560 rpm see page 107.

$n_{N2} \cdot L_h$ rpm · h	i_N	50	63	64	80	81	100	125	140	160	180	200	225	250	280	320	321	360	i_N	n_1 rpm	n_{N2}
		Nominal output power P_{N2} [hp] Nominal output torque T_{N2} [lb in] Train of gears / ratio ... / i																			
400 000	71	–	–	–	–	–	–	–	20.6 42 100 3I/72.8	30.8 65 000 3I/74.9	42.8 89 800 3I/74.6	62.5 127 700 3I/72.6	86.3 180 900 3I/74.5	117 246 600 3I/74.7	166 352 400 3I/75.3	196 391 800 3I/71	245 489 700 3I/71	305 627 300 3I/73	71	2240	31.5
	63	–	1.74 3 300 3I/60.1	1.74 3 440 3I/62.6	2.72 5 680 3I/66.3	3.18 6 630 3I/66.3	7.27 14 050 3I/61.5	14.5 27 600 3I/60.2	20.6 40 250 3I/62	30.2 60 450 3I/63.5	40.5 81 450 3I/63.8	60.8 119 900 3I/62.6	88 171 100 3I/61.7	124 240 600 3I/61.5	158 311 900 3I/62.7	196 415 500 3I/67.1	246 519 400 3I/67.1	324 673 000 3I/66	63	2000	
	56	–	–	–	–	–	–	–	21.4 41 550 3I/55.4	33.8 65 750 3I/55.5	39.9 77 200 3I/55.3	67.3 127 400 3I/54.1	92.8 180 500 3I/55.5	126 246 000 3I/55.6	178 350 300 3I/56	194 391 900 3I/57.8	242 489 900 3I/57.8	301 625 200 3I/59.4	56	1800	
	50	–	1.76 3 430 3I/49.4	1.92 3 900 3I/51.5	3.41 6 700 3I/49.8	4.01 7 880 3I/49.8	7.44 15 000 3I/51.2	15.4 30 000 3I/49.5	20.3 40 250 3I/50.4	30.2 60 450 3I/50.8	40.5 81 450 3I/51	58 120 100 3I/52.6	84 171 400 3I/51.8	118 241 000 3I/51.7	151 312 300 3I/52.7	199 415 300 3I/52.9	249 519 100 3I/52.9	326 668 600 3I/52	50	1600	
	45	–	–	–	–	–	–	–	20.7 42 100 3I/45.1	32.9 65 800 3I/44.4	45 89 650 3I/44.2	62.5 127 700 3I/45.4	86.2 180 900 3I/46.6	117 246 600 3I/46.7	166 352 400 3I/47.1	194 398 300 3I/45.5	242 495 600 3I/45.5	298 628 400 3I/46.8	45	1400	
	40	–	1.61 3 310 3I/40.8	1.61 3 450 3I/42.5	2.7 5 930 3I/43.6	3.12 6 860 3I/43.6	7.14 14 100 3I/39.1	13.4 27 700 3I/40.8	21.3 41 600 3I/38.7	34.6 67 150 3I/38.5	42.2 84 900 3I/39.9	63.7 133 500 3I/41.5	89.6 182 500 3I/40.4	121 258 300 3I/42.4	154 319 600 3I/41.2	216 443 900 3I/40.7	270 554 900 3I/40.7	295 628 400 3I/42.3	40	1250	
	35.5	–	–	–	–	–	–	–	20 42 150 3I/37.5	32.1 65 850 3I/36.5	43.9 89 750 3I/36.3	65.8 127 500 3I/34.4	90.8 180 600 3I/35.4	119 246 500 3I/36.9	161 336 100 3I/37.2	189 398 300 3I/37.4	236 495 600 3I/37.4	290 628 400 3I/38.4	35.5	1120	
	31.5	–	1.53 3 230 3I/33.5	1.66 3 650 3I/34.9	3.25 6 710 3I/32.8	3.82 7 900 3I/32.8	6.63 13 600 3I/32.6	13.6 28 750 3I/33.5	22.2 45 000 3I/32.2	33.7 67 200 3I/31.6	45.1 93 250 3I/32.8	67.1 133 300 3I/31.5	97.5 188 100 3I/30.6	122 258 200 3I/33.5	153 314 200 3I/32.5	211 444 300 3I/33.5	263 555 400 3I/33.5	287 628 400 3I/34.7	31.5	1000	
	28	–	–	–	–	–	5.47 11 050 2I/28.8	–	20.2 41 200 3I/29.1	28.1 55 750 3I/28.4	33.5 67 050 3I/28.6	70 133 500 3I/27.2	90.5 173 200 3I/27.3	131 263 200 3I/28.7	150 302 300 3I/28.8	196 412 700 3I/30	245 515 900 3I/30	291 617 700 3I/30.3	28	900	
	25	0.6 1 160 2I/24.4	1.41 2 680 2I/24.1	1.6 3 150 2I/25.1	2.51 5 130 2I/26	2.89 5 930 2I/26	6.48 12 100 2I/23.7	12.1 23 050 2I/24.1	17 32 300 2I/24.1	26.1 50 650 2I/24.6	36.8 73 550 2I/25.4	53.5 102 200 2I/24.2	74.9 147 300 2I/25	107 210 400 2I/25	146 282 800 2I/24.6	187 368 600 2I/25	220 433 700 2I/25	305 618 100 2I/25.7	25	800	
	22.4	–	–	–	–	–	–	–	19.3 37 150 2I/21.7	28.9 57 750 2I/22.5	39.4 81 600 2I/23.3	56 110 200 2I/22.2	78.2 159 600 2I/23	110 214 500 2I/22	157 308 400 2I/22.2	187 379 400 2I/22.8	220 446 400 2I/22.8	324 672 100 2I/23.4	22.4	710	
	20	0.67 1 350 2I/20.1	1.71 3 300 2I/19.3	1.71 3 440 2I/20.1	2.85 5 930 2I/20.8	3.29 6 860 2I/20.8	7.25 14 000 2I/19.3	14.3 27 600 2I/19.3	20.5 40 250 2I/19.6	29.3 60 500 2I/20.7	39.2 81 500 2I/20.8	58.9 120 000 2I/20.3	85.4 171 300 2I/20	122 240 700 2I/19.7	155 312 000 2I/20.1	201 415 200 2I/20.6	251 519 000 2I/20.6	334 678 100 2I/20.3	20	630	
	18	–	–	–	–	–	–	–	21.3 42 050 2I/17.6	32.4 65 850 2I/18.1	41.5 84 050 2I/18	64.5 127 600 2I/17.6	88.6 180 000 2I/18.1	123 246 300 2I/17.8	174 351 800 2I/17.9	199 398 300 2I/17.8	248 495 600 2I/17.8	365 750 000 2I/18.3	18	560	
355 000	160	–	–	–	–	–	11 500 3I/151	23 150 3I/153	–	–	–	–	–	–	–	–	–	–			
	125	–	–	–	–	–	13 600 3I/123	27 200 3I/123	32 450 3I/123	50 900 3I/128	73 900 3I/131	102 500 3I/119	147 800 3I/123	211 200 3I/125	283 800 3I/123	370 200 3I/127	435 500 3I/127	580 000 3I/131			
	100	–	–	–	–	–	6.06 14 000 3I/103	12.4 28 000 3I/101	18 40 400 3I/100	25.2 60 800 3I/107	33.8 81 900 3I/108	53.4 120 400 3I/100	77.5 171 800 3I/98.5	109 241 600 3I/98.5	139 313 200 3I/100	177 416 900 3I/105	221 521 100 3I/105	294 680 900 3I/103	100	2800	28
	90	–	–	–	–	–	–	–	18.5 41 750 3I/89.4	26.7 63 000 3I/93.7	33 77 700 3I/93.3	58.7 128 000 3I/86.4	81 181 300 3I/88.8	110 247 100 3I/89	156 353 100 3I/89.7	173 393 400 3I/90.1	216 491 700 3I/90.1	279 652 200 3I/92.7	90	2500	
	80	–	1.27 2 690 3I/75.2	1.44 3 160 3I/78.2	2.08 4 850 3I/82.7	2.41 5 610 3I/82.7	5.72 12 150 3I/75.5	10.9 23 150 3I/75.3	17.7 40 450 3I/81.4	25.2 60 800 3I/85.7	33.8 81 900 3I/86.1	51 120 600 3I/84	73.9 172 100 3I/82.7	104 242 000 3I/82.7	132 313 700 3I/84.3	180 416 700 3I/82.5	224 520 900 3I/82.5	298 680 600 3I/81.1	80	2240	

For n_1 lower than 560 rpm see page 107.

$n_{N2} \cdot L_h$ rpm · h	i_N	50	63	64	80	81	100	125	140	160	180	200	225	250	280	320	321	360	i_N	n_1 rpm	n_{N2}
		Nominal output power P_{N2} [hp] Nominal output torque T_{N2} [lb in] Train of gears / ratio ... / i																			
355 000	71	–	–	–	–	–	–	–	18.4 42 250 3I/72.8	28 66 150 3I/74.9	38.3 90 150 3I/74.6	56 128 200 3I/72.6	77.3 181 600 3I/74.5	105 247 500 3I/74.7	149 353 600 3I/75.3	176 393 200 3I/71	220 491 500 3I/71	282 649 000 3I/73	71	2000	28
	63	–	1.57 3 310 3I/60.1	1.57 3 450 3I/62.6	2.48 5 750 3I/66.3	2.87 6 660 3I/66.3	6.56 14 100 3I/61.5	13.1 27 700 3I/60.2	18.6 40 350 3I/62	27.3 60 650 3I/63.5	36.6 81 700 3I/63.8	54.9 120 300 3I/62.6	79.5 171 700 3I/61.7	112 241 400 3I/61.5	142 312 900 3I/62.7	177 416 900 3I/67.1	222 521 100 3I/67.1	295 680 900 3I/66	63	1800	
	56	–	–	–	–	–	–	–	19.1 41 700 3I/55.4	30.2 66 000 3I/55.5	35.6 77 500 3I/55.3	60 127 900 3I/54.1	82.8 181 200 3I/55.5	113 247 000 3I/55.6	160 352 800 3I/56	173 393 400 3I/57.8	216 491 700 3I/57.8	277 647 700 3I/59.4	56	1600	
	50	–	1.54 3 430 3I/49.4	1.69 3 920 3I/51.5	3 6 730 3I/49.8	3.53 7 920 3I/49.8	6.51 15 000 3I/51.2	13.7 30 550 3I/49.5	17.8 40 450 3I/50.4	26.5 60 700 3I/50.8	35.6 81 750 3I/51	50.9 120 600 3I/52.6	73.8 172 100 3I/51.8	104 242 000 3I/51.7	132 313 700 3I/52.7	175 417 000 3I/52.9	219 521 300 3I/52.9	291 681 100 3I/52	50	1400	
	45	–	–	–	–	–	–	–	18.6 42 250 3I/45.1	29.5 66 050 3I/44.4	40.4 90 000 3I/44.2	56 128 200 3I/45.4	77.2 181 600 3I/46.6	105 247 500 3I/46.7	149 353 600 3I/47.1	174 398 300 3I/45.5	216 495 600 3I/45.5	275 648 000 3I/46.8	45	1250	
	40	–	1.45 3 320 3I/40.8	1.45 3 460 3I/42.5	2.42 5 930 3I/43.6	2.8 6 860 3I/43.6	6.42 14 150 3I/39.1	12.1 27 750 3I/40.8	19.2 41 750 3I/38.7	31.1 67 400 3I/38.5	37.9 85 150 3I/39.9	57.3 134 000 3I/41.5	80.5 183 100 3I/40.4	109 259 200 3I/42.4	143 330 300 3I/41.2	194 445 500 3I/40.7	243 556 900 3I/40.7	264 628 400 3I/42.3	40	1120	
	35.5	–	–	–	–	–	–	–	17.9 42 300 3I/37.5	28.7 66 100 3I/36.5	39.3 90 050 3I/36.3	59 128 000 3I/34.4	81.4 181 300 3I/35.4	106 247 400 3I/36.9	148 347 700 3I/37.2	169 398 300 3I/37.4	210 495 600 3I/37.4	264 639 800 3I/38.4	35.5	1000	
	31.5	–	1.38 3 230 3I/33.5	1.49 3 650 3I/34.9	2.94 6 730 3I/32.8	3.45 7 920 3I/32.8	5.96 13 600 3I/32.6	12.2 28 750 3I/33.5	20 45 000 3I/32.2	30.4 67 400 3I/31.6	40.7 93 550 3I/32.8	60.6 133 700 3I/31.5	90 192 900 3I/30.6	110 259 000 3I/33.5	138 314 200 3I/32.5	190 445 800 3I/33.5	238 557 200 3I/33.5	259 628 400 3I/34.7	31.5	900	
	28	–	–	–	–	–	4.88 11 100 2I/28.8	–	18.3 42 050 3I/29.1	24.9 55 750 3I/28.4	30 67 500 3I/28.6	62.5 134 000 3I/27.2	83.4 179 400 3I/27.3	117 264 200 3I/28.7	134 304 600 3I/28.8	181 427 600 3I/30	226 534 500 3I/30	261 621 500 3I/30.3	28	800	
	25	0.54 1 170 2I/24.4	1.26 2 690 2I/24.1	1.42 3 160 2I/25.1	2.22 5 130 2I/26	2.57 5 930 2I/26	5.77 12 150 2I/23.7	10.8 23 150 2I/24.1	15.2 32 450 2I/24.1	23.3 50 850 2I/24.6	32.8 73 850 2I/25.4	47.7 102 600 2I/24.2	66.7 147 900 2I/25	95.2 211 200 2I/25	130 283 800 2I/24.6	167 370 000 2I/25	196 435 300 2I/25	271 620 400 2I/25.7	25	710	
	22.4	–	–	–	–	–	–	–	17.2 37 300 2I/21.7	25.8 58 000 2I/22.5	35.1 81 900 2I/23.3	49.9 110 600 2I/22.2	69.6 160 000 2I/23	97.8 215 300 2I/22	140 309 500 2I/22.2	167 380 900 2I/22.8	196 448 100 2I/22.8	289 674 600 2I/23.4	22.4	630	
	20	0.6 1 360 2I/20.1	1.53 3 320 2I/19.3	1.53 3 450 2I/20.1	2.53 5 930 2I/20.8	2.93 6 860 2I/20.8	6.44 14 000 2I/19.3	12.8 27 700 2I/19.3	18.3 40 400 2I/19.6	26.1 60 700 2I/20.7	35 81 800 2I/20.8	52.6 120 400 2I/20.3	76.2 171 900 2I/20	109 241 600 2I/19.7	139 313 200 2I/20.1	179 416 700 2I/20.6	224 520 900 2I/20.6	298 680 600 2I/20.3	20	560	
315 000	160	–	–	–	–	–	11 500 3I/151	23 200 3I/153	–	–	–	–	–	–	–	–	–	–			
	125	–	–	–	–	–	13 600 3I/123	27 850 3I/123	32 600 3I/123	51 100 3I/128	74 200 3I/131	102 900 3I/119	148 300 3I/123	212 000 3I/125	284 900 3I/123	371 600 3I/127	437 200 3I/127	580 000 3I/131			
	100	–	–	–	–	–	5.41 14 000 3I/103	11 28 000 3I/101	16.1 40 550 3I/100	22.6 61 000 3I/107	30.3 82 200 3I/108	47.9 120 800 3I/100	69.4 172 400 3I/98.5	97.7 242 500 3I/98.5	124 314 300 3I/100	158 418 400 3I/105	198 523 000 3I/105	263 683 400 3I/103	100	2500	25
	90	–	–	–	–	–	–	–	16.7 41 850 3I/89.4	24.7 65 000 3I/93.7	29.7 77 950 3I/93.3	52.8 128 400 3I/86.4	72.8 181 900 3I/88.8	99 248 000 3I/89	140 354 300 3I/89.7	156 394 700 3I/90.1	195 493 400 3I/90.1	258 674 000 3I/92.7	90	2240	
	80	–	1.14 2 700 3I/75.2	1.29 3 170 3I/78.2	1.89 4 920 3I/82.7	2.18 5 680 3I/82.7	5.13 12 200 3I/75.5	9.78 23 200 3I/75.3	15.8 40 600 3I/81.4	22.6 61 000 3I/85.7	30.3 82 200 3I/86.1	45.7 121 000 3I/84	66.2 172 700 3I/82.7	93.2 242 900 3I/82.7	119 314 800 3I/84.3	161 418 200 3I/82.5	201 522 800 3I/82.5	267 683 000 3I/81.1	80	2000	
	71	–	–	–	–	–	–	–	16.6 42 400 3I/72.8	25.3 66 350 3I/74.9	34.6 90 450 3I/74.6	50.6 128 600 3I/72.6	69.8 182 200 3I/74.5	94.9 248 300 3I/74.7	135 354 800 3I/75.3	159 394 500 3I/71	198 493 100 3I/71	262 669 800 3I/73	71	1800	

For n_1 lower than 560 rpm see page 107.

$n_{N2} \cdot L_h$ rpm · h	i_N	50	63	64	80	81	100	125	140	160	180	200	225	250	280	320	321	360	i_N	n_1 rpm	n_{N2}
		Nominal output power P_{N2} [hp] / Nominal output torque T_{N2} [lb in] / Train of gears / ratio ... / i																			
315 000	63	–	1.4 3 320 3I/60.1	1.4 3 460 3I/62.6	2.23 5 840 3I/66.3	2.59 6 750 3I/66.3	5.85 14 150 3I/61.5	11.7 27 800 3I/60.2	16.6 40 500 3I/62	24.3 60 850 3I/63.5	32.6 82 000 3I/63.8	48.9 120 700 3I/62.6	70.9 172 300 3I/61.7	99.9 242 300 3I/61.5	127 314 100 3I/62.7	158 418 400 3I/67.1	198 523 000 3I/67.1	263 683 400 3I/66	63	1600	25
	56	–	–	–	–	–	–	–	16.8 41 850 3I/55.4	26.5 66 250 3I/55.5	31.3 77 850 3I/55.3	52.7 128 400 3I/54.1	72.8 181 900 3I/55.5	99 248 000 3I/55.6	140 354 300 3I/56	153 398 300 3I/57.8	191 495 600 3I/57.8	252 674 100 3I/59.4	56	1400	
	50	–	1.38 3 430 3I/49.4	1.51 3 930 3I/51.5	2.69 6 750 3I/49.8	3.16 7 940 3I/49.8	5.81 15 000 3I/51.2	12.2 30 550 3I/49.5	16 40 600 3I/50.4	23.8 60 900 3I/50.8	31.9 82 050 3I/51	45.6 121 000 3I/52.6	66.1 172 700 3I/51.8	93.2 242 900 3I/51.7	119 314 800 3I/52.7	157 418 500 3I/52.9	196 523 200 3I/52.9	261 683 600 3I/52	50	1250	
	45	–	–	–	–	–	–	–	16.7 42 400 3I/45.1	26.5 66 250 3I/44.4	36.3 90 300 3I/44.2	50.3 128 600 3I/45.4	69.4 182 200 3I/46.6	94.5 248 400 3I/46.7	134 354 900 3I/47.1	156 398 300 3I/45.5	194 495 600 3I/45.5	254 669 700 3I/46.8	45	1120	
	40	–	1.3 3 330 3I/40.8	1.3 3 470 3I/42.5	2.16 5 930 3I/43.6	2.5 6 860 3I/43.6	5.75 14 200 3I/39.1	10.8 27 850 3I/40.8	17.2 41 900 3I/38.7	27.9 67 600 3I/38.5	34 85 450 3I/39.9	51.3 134 400 3I/41.5	72.2 183 700 3I/40.4	97.2 260 100 3I/42.4	132 341 800 3I/41.2	174 447 100 3I/40.7	218 558 800 3I/40.7	236 628 400 3I/42.3	40	1000	
	35.5	–	–	–	–	–	–	–	16.1 42 450 3I/37.5	25.9 66 300 3I/36.5	35.5 90 350 3I/36.3	53.2 128 400 3I/34.4	73.5 181 900 3I/35.4	96 248 200 3I/36.9	136 354 700 3I/37.2	152 398 300 3I/37.4	189 495 600 3I/37.4	245 660 400 3I/38.4	35.5	900	
	31.5	–	1.22 3 230 3I/33.5	1.32 3 650 3I/34.9	2.62 6 760 3I/32.8	3.08 7 950 3I/32.8	5.3 13 600 3I/32.6	10.9 28 750 3I/33.5	17.7 45 000 3I/32.2	27.2 67 650 3I/31.6	36.3 93 900 3I/32.8	54.1 134 200 3I/31.5	80 192 900 3I/30.6	98.4 260 000 3I/33.5	127 325 300 3I/32.5	170 447 400 3I/33.5	212 559 300 3I/33.5	230 628 400 3I/34.7	31.5	800	
	28	–	–	–	–	–	4.35 11 100 2I/28.8	–	16.3 42 050 3I/29.1	22.1 55 750 3I/28.4	26.8 67 900 3I/28.6	55.7 134 500 3I/27.2	74.2 180 000 3I/27.3	104 265 200 3I/28.7	120 306 900 3I/28.8	166 443 200 3I/30	208 553 900 3I/30	233 625 300 3I/30.3	28	710	
	25	0.48 1 170 2I/24.4	1.12 2 700 2I/24.1	1.27 3 170 2I/25.1	1.97 5 130 2I/26	2.28 5 930 2I/26	5.14 12 200 2I/23.7	9.64 23 200 2I/24.1	13.5 32 550 2I/24.1	20.7 51 050 2I/24.6	29.2 74 100 2I/25.4	42.5 103 000 2I/24.2	59.4 148 400 2I/25	84.8 212 000 2I/25	116 284 900 2I/24.6	149 371 400 2I/25	175 437 000 2I/25	242 622 800 2I/25.7	25	630	
	22.4	–	–	–	–	–	–	–	15.3 37 450 2I/21.7	22.9 58 000 2I/22.5	31.3 82 200 2I/23.3	44.5 111 100 2I/22.2	61.9 160 000 2I/23	87.3 216 100 2I/22	125 310 700 2I/22.2	149 382 300 2I/22.8	175 449 800 2I/22.8	258 677 100 2I/23.4	22.4	560	
280 000	160	–	–	–	–	–	11 800 3I/151	23 300 3I/153	–	–	–	–	–	–	–	–	–	–			
	125	–	–	–	–	–	5.13 14 250 3I/123	10.1 27 950 3I/123	11.8 32 700 3I/123	17.9 51 300 3I/128	25.2 74 450 3I/131	38.5 103 300 3I/119	53.9 148 900 3I/123	75.6 212 800 3I/125	103 285 900 3I/123	131 373 000 3I/127	154 438 800 3I/127	204 600 000 3I/131	125	2800	22.4
	100	–	–	–	–	–	5.02 14 500 3I/103	10.2 29 000 3I/101	14.5 40 700 3I/100	20.3 61 200 3I/107	27.2 82 500 3I/108	43.1 121 200 3I/100	62.4 173 000 3I/98.5	87.8 243 300 3I/98.5	112 315 400 3I/100	143 419 900 3I/105	178 524 800 3I/105	237 685 700 3I/103	100	2240	
	90	–	–	–	–	–	–	–	14.9 42 000 3I/89.4	22.6 66 600 3I/93.7	26.6 78 250 3I/93.3	47.3 128 900 3I/86.4	65.3 182 600 3I/88.8	88.7 248 900 3I/89	126 355 600 3I/89.7	139 396 100 3I/90.1	174 495 200 3I/90.1	239 697 300 3I/92.7	90	2000	
	80	–	1.03 2 710 3I/75.2	1.16 3 180 3I/78.2	1.72 4 980 3I/82.7	1.99 5 750 3I/82.7	4.63 12 250 3I/75.5	8.83 23 300 3I/75.3	14.3 40 700 3I/81.4	20.4 61 200 3I/85.7	27.4 82 500 3I/86.1	41.3 121 400 3I/84	59.8 173 300 3I/82.7	84.2 243 700 3I/82.7	107 315 800 3I/84.3	145 419 600 3I/82.5	182 524 500 3I/82.5	241 685 300 3I/81.1	80	1800	
	71	–	–	–	–	–	–	–	14.9 42 550 3I/72.8	22.6 66 600 3I/74.9	30.9 90 800 3I/74.6	45.1 129 100 3I/72.6	62.3 182 900 3I/74.5	84.7 249 300 3I/74.7	120 356 100 3I/75.3	142 396 000 3I/71	177 494 900 3I/71	241 693 900 3I/73	71	1600	
	63	–	1.23 3 340 3I/60.1	1.23 3 480 3I/62.6	1.99 5 930 3I/66.3	2.3 6 860 3I/66.3	5.14 14 250 3I/61.5	10.3 27 900 3I/60.2	14.6 40 700 3I/62	21.4 61 100 3I/63.5	28.7 82 350 3I/63.8	43 121 200 3I/62.6	62.3 173 000 3I/61.7	87.8 243 300 3I/61.5	112 315 400 3I/62.7	139 420 200 3I/67.1	174 525 200 3I/67.1	231 686 300 3I/66	63	1400	
	56	–	–	–	–	–	–	–	15.1 42 000 3I/55.4	23.7 66 500 3I/55.5	28 78 100 3I/55.3	47.2 128 900 3I/54.1	65.2 182 600 3I/55.5	88.7 248 900 3I/55.6	126 355 600 3I/56	137 398 300 3I/57.8	170 495 600 3I/57.8	233 697 400 3I/59.4	56	1250	

For n_1 lower than 560 rpm see page 107.

$n_{N2} \cdot L_h$ rpm · h	i_N	50	63	64	80	81	100	125	140	160	180	200	225	250	280	320	321	360	i_N	n_1 rpm	n_{N2}
		Nominal output power P_{N2} [hp]																			
		Nominal output torque T_{N2} [lb in]																			
		Train of gears / ratio ... / i																			
280 000	50	–	1.23 3 430 3I/49.4	1.36 3 950 3I/51.5	2.42 6 780 3I/49.8	2.84 7 970 3I/49.8	5.21 15 000 3I/51.2	11 30 550 3I/49.5	14.3 40 700 3I/50.4	21.4 61 100 3I/50.8	28.7 82 350 3I/51	41 121 400 3I/52.6	59.5 173 300 3I/51.8	83.8 243 700 3I/51.7	107 315 900 3I/52.7	141 420 000 3I/52.9	176 525 000 3I/52.9	234 685 900 3I/52	50	1120	22.4
	45	–	–	–	–	–	–	–	15 42 550 3I/45.1	23.7 66 500 3I/44.4	32.5 90 650 3I/44.2	45.1 129 100 3I/45.4	62.2 182 900 3I/46.6	84.7 249 300 3I/46.7	120 356 100 3I/47.1	139 398 300 3I/45.5	173 495 600 3I/45.5	235 692 800 3I/46.8	45	1000	
	40	–	1.17 3 340 3I/40.8	1.17 3 480 3I/42.5	1.94 5 930 3I/43.6	2.25 6 860 3I/43.6	5.19 14 250 3I/39.1	9.78 27 950 3I/40.8	15.5 42 000 3I/38.7	25.2 67 850 3I/38.5	30.7 85 750 3I/39.9	46.4 134 900 3I/41.5	65.2 184 400 3I/40.4	87.8 260 900 3I/42.4	122 352 700 3I/41.2	157 448 600 3I/40.7	197 560 700 3I/40.7	218 645 600 3I/42.3	40	900	
	35.5	–	–	–	–	–	–	–	14.4 42 600 3I/37.5	23.1 66 550 3I/36.5	31.7 90 700 3I/36.3	47.5 128 900 3I/34.4	65.5 182 600 3I/35.4	85.7 249 200 3I/36.9	122 356 000 3I/37.2	135 398 300 3I/37.4	168 495 800 3I/37.4	226 684 100 3I/38.4	35.5	800	
	31.5	–	1.09 3 230 3I/33.5	1.18 3 650 3I/34.9	2.33 6 780 3I/32.8	2.74 7 980 3I/32.8	4.7 13 600 3I/32.6	9.66 28 750 3I/33.5	15.7 45 000 3I/32.2	24.2 67 950 3I/31.6	32.4 94 250 3I/32.8	48.2 134 700 3I/31.5	71 192 900 3I/30.6	87.6 261 000 3I/33.5	117 337 200 3I/32.5	151 449 300 3I/33.5	189 561 600 3I/33.5	208 640 100 3I/34.7	31.5	710	
	28	–	–	–	–	–	3.87 11 150 2I/28.8	–	14.4 42 050 3I/29.1	19.6 55 750 3I/28.4	23.9 68 350 3I/28.6	49.7 135 400 3I/27.2	65.9 180 000 3I/27.3	93.5 268 700 3I/28.7	107 309 600 3I/28.8	153 459 300 3I/30	191 574 200 3I/30	208 628 400 3I/30.3	28	630	
	25	0.43 1 170 2I/24.4	1 2 710 2I/24.1	1.13 3 190 2I/25.1	1.75 5 130 2I/26	2.03 5 930 2I/26	4.58 12 250 2I/23.7	8.6 23 300 2I/24.1	12.1 32 700 2I/24.1	18.5 51 250 2I/24.6	26.1 74 400 2I/25.4	37.8 103 000 2I/24.2	53 149 000 2I/25	75.6 212 800 2I/25	103 285 900 2I/24.6	133 372 800 2I/25	155 437 000 2I/25	216 625 100 2I/25.7	25	560	
250 000	160	–	–	–	–	–	11 800 3I/151	23 400 3I/153	–	–	–	–	–	–	–	–	–	–			
	125	–	–	–	–	–	4.6 14 300 3I/123	9.07 28 050 3I/123	10.6 32 800 3I/123	16 51 450 3I/128	22.6 74 750 3I/131	34.5 103 700 3I/119	48.3 149 400 3I/123	67.8 213 600 3I/125	92.5 287 000 3I/123	117 374 300 3I/127	138 440 400 3I/127	182 600 000 3I/131	125	2500	20
	100	–	–	–	–	–	4.48 14 500 3I/103	9.14 29 000 3I/101	13 40 850 3I/100	18.2 61 450 3I/107	24.4 82 800 3I/108	38.6 121 700 3I/100	55.9 173 700 3I/98.5	78.7 244 200 3I/98.5	100 316 500 3I/100	128 421 400 3I/105	160 526 700 3I/105	212 688 200 3I/103	100	2000	
	90	–	–	–	–	–	–	–	13.5 42 150 3I/89.4	20.4 66 800 3I/93.7	24 78 500 3I/93.3	42.7 129 300 3I/86.4	58.9 183 200 3I/88.8	80.1 249 700 3I/89	114 356 800 3I/89.7	126 397 500 3I/90.1	157 496 800 3I/90.1	219 710 600 3I/92.7	90	1800	
	80	–	0.92 2 720 3I/75.2	1.04 3 190 3I/78.2	1.55 5 050 3I/82.7	1.79 5 840 3I/82.7	4.13 12 300 3I/75.5	7.88 23 400 3I/75.3	12.7 40 850 3I/81.4	18.2 61 450 3I/85.7	24.4 82 800 3I/86.1	36.8 121 800 3I/84	53.4 173 900 3I/82.7	75.1 244 600 3I/82.7	95.5 317 000 3I/84.3	130 421 200 3I/82.5	162 526 400 3I/82.5	215 687 900 3I/81.1	80	1600	
	71	–	–	–	–	–	–	–	13 42 750 3I/72.8	19.8 66 900 3I/74.9	27.1 91 150 3I/74.6	39.7 129 600 3I/72.6	54.7 183 600 3I/74.5	74.4 250 300 3I/74.7	106 357 600 3I/75.3	125 398 300 3I/71	155 497 000 3I/71	220 722 300 3I/73	71	1400	
	63	–	1.11 3 350 3I/60.1	1.11 3 490 3I/62.6	1.77 5 930 3I/66.3	2.05 6 860 3I/66.3	4.61 14 300 3I/61.5	9.23 28 000 3I/60.2	13.1 40 850 3I/62	19.2 61 350 3I/63.5	25.7 82 650 3I/63.8	38.5 121 700 3I/62.6	55.8 173 700 3I/61.7	78.7 244 200 3I/61.5	100 316 500 3I/62.7	125 421 700 3I/67.1	156 527 100 3I/67.1	207 688 700 3I/66	63	1250	
	56	–	–	–	–	–	–	–	13.5 42 150 3I/55.4	21.4 66 700 3I/55.5	25.2 78 400 3I/55.3	42.5 129 300 3I/54.1	58.6 183 200 3I/55.5	79.8 249 700 3I/55.6	113 356 800 3I/56	123 398 300 3I/57.8	153 497 300 3I/57.8	213 711 300 3I/59.4	56	1120	
	50	–	1.1 3 430 3I/49.4	1.22 3 960 3I/51.5	2.18 6 850 3I/49.8	2.56 8 060 3I/49.8	4.65 15 000 3I/51.2	9.79 30 550 3I/49.5	12.9 40 850 3I/50.4	19.2 61 350 3I/50.8	25.7 82 650 3I/51	36.8 121 800 3I/52.6	53.3 173 900 3I/51.8	75.1 244 600 3I/51.7	95.5 317 000 3I/52.7	126 421 500 3I/52.9	158 526 900 3I/52.9	210 688 400 3I/52	50	1000	
	45	–	–	–	–	–	–	–	13.5 42 700 3I/45.1	21.4 66 700 3I/44.4	29.4 90 950 3I/44.2	40.7 129 500 3I/45.4	56.2 183 500 3I/46.6	76.5 250 100 3I/46.7	108 357 300 3I/47.1	125 398 300 3I/45.5	156 497 000 3I/45.5	218 715 100 3I/46.8	45	900	
	40	–	1.05 3 360 3I/40.8	1.05 3 500 3I/42.5	1.73 5 930 3I/43.6	2 6 860 3I/43.6	4.63 14 300 3I/39.1	8.72 28 050 3I/40.8	13.8 42 200 3I/38.7	22.5 68 300 3I/38.5	27.4 86 100 3I/39.9	41.5 136 000 3I/41.5	58.1 185 000 3I/40.4	79 264 200 3I/42.4	112 363 600 3I/41.2	142 454 600 3I/40.7	177 568 200 3I/40.7	201 668 800 3I/42.3	40	800	

For n_1 lower than 560 rpm see page 107.

$n_{N2} \cdot L_h$ rpm · h	i_N	50	63	64	80	81	100	125	140	160	180	200	225	250	280	320	321	360	i_N	n_1 rpm	n_{N2}
		Nominal output power P_{N2} [hp]																			
		Nominal output torque T_{N2} [lb in]																			
		Train of gears / ratio ... / i																			
250 000	35.5	–	–	–	–	–	–	–	12.8 42 750 3I/37.5	20.6 66 800 3I/36.5	28.2 91 050 3I/36.3	42.3 129 400 3I/34.4	58.4 183 200 3I/35.4	76.3 250 100 3I/36.9	108 357 300 3I/37.2	120 398 300 3I/37.4	150 497 800 3I/37.4	208 709 000 3I/38.4	35.5	710	20
	31.5	–	0.96 3 230 3I/33.5	1.04 3 650 3I/34.9	2.1 6 890 3I/32.8	2.47 8 110 3I/32.8	4.17 13 600 3I/32.6	8.57 28 750 3I/33.5	14 45 000 3I/32.2	21.7 68 600 3I/31.6	28.8 94 600 3I/32.8	43 135 600 3I/31.5	63 192 900 3I/30.6	78.8 264 400 3I/33.5	107 349 500 3I/32.5	137 457 500 3I/33.5	171 571 800 3I/33.5	191 663 500 3I/34.7	31.5	630	
	28	–	–	–	–	–	3.45 11 200 2I/28.8	–	12.8 42 050 3I/29.1	17.5 55 750 3I/28.4	21.4 68 750 3I/28.6	44.4 136 000 3I/27.2	58.5 180 000 3I/27.3	84.6 273 500 3I/28.7	98.9 320 700 3I/28.8	141 475 900 3I/30	176 594 800 3I/30	185 628 400 3I/30.3	28	560	
224 000	160	–	–	–	–	–	3.62 12 350 3I/151	6.81 23 500 3I/153	–	–	–	–	–	–	–	–	–	–	160	2800	18
	125	–	–	–	–	–	4.13 14 350 3I/123	8.16 28 150 3I/123	9.54 32 950 3I/123	14.4 51 650 3I/128	20.3 75 000 3I/131	31 104 000 3I/119	43.4 149 900 3I/123	60.9 214 300 3I/125	83.1 288 000 3I/123	105 375 600 3I/127	124 441 900 3I/127	167 615 000 3I/131	125	2240	
	100	–	–	–	–	–	4.03 14 500 3I/103	8.23 29 000 3I/101	11.7 41 000 3I/100	16.4 61 650 3I/107	22 83 050 3I/108	34.8 122 100 3I/100	50.5 174 200 3I/98.5	71.1 245 000 3I/98.5	90.4 317 600 3I/100	115 422 800 3I/105	144 528 400 3I/105	191 690 500 3I/103	100	1800	
	90	–	–	–	–	–	–	–	12 42 300 3I/89.4	18.3 67 700 3I/93.7	21.4 78 800 3I/93.3	38.2 129 900 3I/86.4	52.6 184 100 3I/88.8	71.7 251 400 3I/89	102 359 200 3I/89.7	113 402 300 3I/90.1	142 502 900 3I/90.1	195 713 300 3I/92.7	90	1600	
	80	–	0.81 2 730 3I/75.2	0.91 3 210 3I/78.2	1.38 5 130 3I/82.7	1.59 5 930 3I/82.7	3.63 12 350 3I/75.5	6.93 23 450 3I/75.3	11.2 41 050 3I/81.4	16 61 700 3I/85.7	21.4 83 150 3I/86.1	32.4 122 400 3I/84	46.9 174 700 3I/82.7	66 245 600 3I/82.7	83.9 318 300 3I/84.3	114 422 900 3I/82.5	142 528 700 3I/82.5	189 690 700 3I/81.1	80	1400	
	71	–	–	–	–	–	–	–	11.8 43 200 3I/72.8	18 67 950 3I/74.9	24.6 92 600 3I/74.6	35.9 131 300 3I/72.6	49.5 186 100 3I/74.5	67.5 254 200 3I/74.7	95.7 363 100 3I/75.3	113 402 800 3I/71	141 503 500 3I/71	203 747 300 3I/73	71	1250	
	63	–	0.99 3 360 3I/60.1	0.99 3 500 3I/62.6	1.59 5 930 3I/66.3	1.84 6 860 3I/66.3	4.14 14 350 3I/61.5	8.29 28 100 3I/60.2	11.8 41 000 3I/62	17.2 61 550 3I/63.5	23.1 82 950 3I/63.8	34.6 122 100 3I/62.6	50.2 174 300 3I/61.7	70.8 245 000 3I/61.5	90 317 600 3I/62.7	112 423 100 3I/67.1	140 528 900 3I/67.1	186 691 100 3I/66	63	1120	
	56	–	–	–	–	–	–	–	12.1 42 300 3I/55.4	19.2 67 150 3I/55.5	22.6 78 650 3I/55.3	38.1 129 900 3I/54.1	52.6 184 100 3I/55.5	71.7 251 400 3I/55.6	102 359 200 3I/56	111 403 800 3I/57.8	139 504 800 3I/57.8	191 713 800 3I/59.4	56	1000	
	50	–	0.99 3 430 3I/49.4	1.12 4 020 3I/51.5	1.99 6 960 3I/49.8	2.35 8 190 3I/49.8	4.19 15 000 3I/51.2	8.81 30 550 3I/49.5	11.6 41 000 3I/50.4	17.3 61 550 3I/50.8	23.2 82 900 3I/51	33.2 122 300 3I/52.6	48.1 174 500 3I/51.8	67.8 245 400 3I/51.7	86.2 318 000 3I/52.7	114 422 900 3I/52.9	143 528 600 3I/52.9	190 690 700 3I/52	50	900	
	45	–	–	–	–	–	–	–	12.1 43 000 3I/45.1	19.2 67 150 3I/44.4	26.3 91 500 3I/44.2	36.6 130 900 3I/45.4	50.5 185 400 3I/46.6	68.8 253 200 3I/46.7	97.6 361 800 3I/47.1	112 402 900 3I/45.5	140 503 600 3I/45.5	201 740 800 3I/46.8	45	800	
	40	–	0.93 3 370 3I/40.8	0.93 3 510 3I/42.5	1.53 5 930 3I/43.6	1.77 6 860 3I/43.6	4.13 14 350 3I/39.1	7.77 28 150 3I/40.8	12.3 42 350 3I/38.7	20.1 68 600 3I/38.5	24.4 86 400 3I/39.9	36.9 136 000 3I/41.5	51.8 185 700 3I/40.4	71.4 269 000 3I/42.4	101 369 700 3I/41.2	128 462 800 3I/40.7	160 578 600 3I/40.7	185 693 200 3I/42.3	40	710	
	35.5	–	–	–	–	–	–	–	11.6 43 350 3I/37.5	18.5 67 600 3I/36.5	25.3 92 100 3I/36.3	37.8 130 200 3I/34.4	52.1 184 400 3I/35.4	68.6 253 400 3I/36.9	97.3 362 000 3I/37.2	108 405 500 3I/37.4	136 506 900 3I/37.4	191 734 900 3I/38.4	35.5	630	
	31.5	–	0.86 3 230 3I/33.5	0.93 3 650 3I/34.9	1.9 7 020 3I/32.8	2.22 8 190 3I/32.8	3.71 13 600 3I/32.6	7.62 28 750 3I/33.5	12.4 45 000 3I/32.2	19.3 68 600 3I/31.6	25.7 94 950 3I/32.8	38.4 136 000 3I/31.5	56 192 900 3I/30.6	71.3 269 100 3I/33.5	98.9 362 000 3I/32.5	124 465 700 3I/33.5	155 582 100 3I/33.5	176 687 400 3I/34.7	31.5	560	
200 000	160	–	–	–	–	–	3.24 12 400 3I/151	6.1 23 550 3I/153	–	–	–	–	–	–	–	–	–	–	160	2500	16
	125	–	–	–	–	–	3.72 14 450 3I/123	7.33 28 300 3I/123	8.55 33 050 3I/123	12.9 51 850 3I/128	18.2 75 250 3I/131	27.8 104 400 3I/119	38.9 150 500 3I/123	54.6 215 100 3I/125	74.5 289 000 3I/123	94.4 376 900 3I/127	111 443 500 3I/127	154 632 000 3I/131	125	2000	

For n_1 lower than 560 rpm see page 107.

$n_{N2} \cdot L_h$ rpm · h	i_N	50	63	64	80	81	100	125	140	160	180	200	225	250	280	320	321	360	i_N	n_1 rpm	n_{N2}
		Nominal output power P_{N2} [hp] Nominal output torque T_{N2} [lb in] Train of gears / ratio ... / i																			
200 000	100	–	–	–	–	–	3.71 15 000 3I/103	7.57 30 000 3I/101	10.5 41 250 3I/100	14.8 62 450 3I/107	19.8 84 150 3I/108	31.1 122 600 3I/100	45.1 175 100 3I/98.5	63.6 246 700 3I/98.5	80.9 319 700 3I/100	104 427 900 3I/105	130 534 900 3I/105	172 698 900 3I/103	100	1600	16
	90	–	–	–	–	–	–	–	10.6 42 500 3I/89.4	16.3 68 600 3I/93.7	18.8 79 100 3I/93.3	34.1 132 600 3I/86.4	47 187 800 3I/88.8	64 256 500 3I/89	90.8 366 500 3I/89.7	101 410 500 3I/90.1	126 513 200 3I/90.1	172 716 300 3I/92.7	90	1400	
	80	–	0.72 2 740 3I/75.2	0.82 3 220 3I/78.2	1.23 5 130 3I/82.7	1.42 5 930 3I/82.7	3.25 12 400 3I/75.5	6.21 23 550 3I/75.3	10.1 41 500 3I/81.4	14.5 62 650 3I/85.7	19.4 84 450 3I/86.1	29.3 124 000 3I/84	42.4 177 000 3I/82.7	59.8 249 400 3I/82.7	76.1 323 200 3I/84.3	103 428 500 3I/82.5	129 535 600 3I/82.5	171 699 800 3I/81.1	80	1250	
	71	–	–	–	–	–	–	–	10.7 43 950 3I/72.8	16.3 68 600 3I/74.9	22.4 94 150 3I/74.6	32.7 133 500 3I/72.6	45.1 189 200 3I/74.5	61.5 258 400 3I/74.7	87.1 369 200 3I/75.3	103 409 600 3I/71	128 512 000 3I/71	188 772 300 3I/73	71	1120	
	63	–	0.89 3 370 3I/60.1	0.89 3 520 3I/62.6	1.42 5 930 3I/66.3	1.64 6 860 3I/66.3	3.73 14 450 3I/61.5	7.44 28 250 3I/60.2	10.5 41 200 3I/62	15.5 61 950 3I/63.5	20.8 83 450 3I/63.8	31.1 122 700 3I/62.6	45 175 100 3I/61.7	63.6 246 700 3I/61.5	80.9 319 700 3I/62.7	102 429 500 3I/67.1	127 536 900 3I/67.1	169 701 500 3I/66	63	1000	
	56	–	–	–	–	–	–	–	10.9 42 450 3I/55.4	17.5 68 250 3I/55.5	20.4 78 900 3I/55.3	34.8 132 000 3I/54.1	48.1 187 000 3I/55.5	65.6 255 400 3I/55.6	93 364 900 3I/56	101 410 300 3I/57.8	127 512 900 3I/57.8	172 716 200 3I/59.4	56	900	
	50	–	0.88 3 430 3I/49.4	1.01 4 100 3I/51.5	1.8 7 080 3I/49.8	2.12 8 330 3I/49.8	3.72 15 000 3I/51.2	7.83 30 550 3I/49.5	10.4 41 300 3I/50.4	15.5 61 950 3I/50.8	20.8 83 450 3I/51	29.8 123 600 3I/52.6	43.2 176 400 3I/51.8	61 248 500 3I/51.7	77.6 322 100 3I/52.7	103 428 500 3I/52.9	129 535 700 3I/52.9	171 699 900 3I/52	50	800	
	45	–	–	–	–	–	–	–	10.9 43 800 3I/45.1	17.3 68 350 3I/44.4	23.7 93 200 3I/44.2	33.1 133 300 3I/45.4	45.6 188 800 3I/46.6	62.2 257 900 3I/46.7	88.2 368 400 3I/47.1	102 410 200 3I/45.5	127 512 800 3I/45.5	185 767 800 3I/46.8	45	710	
	40	–	0.84 3 410 3I/40.8	0.84 3 560 3I/42.5	1.36 5 930 3I/43.6	1.58 6 870 3I/43.6	3.7 14 500 3I/39.1	6.99 28 550 3I/40.8	11 42 500 3I/38.7	17.8 68 600 3I/38.5	21.7 86 750 3I/39.9	32.7 136 000 3I/41.5	46.1 186 400 3I/40.4	64.5 274 000 3I/42.4	90.1 371 100 3I/41.2	116 471 300 3I/40.7	145 589 100 3I/40.7	170 718 500 3I/42.3	40	630	
	35.5	–	–	–	–	–	–	–	10.3 43 700 3I/37.5	16.7 68 600 3I/36.5	22.9 93 750 3I/36.3	34.1 132 000 3I/34.4	47.2 187 700 3I/35.4	62.1 257 900 3I/36.9	88 368 500 3I/37.2	98.1 412 800 3I/37.4	123 516 000 3I/37.4	176 761 400 3I/38.4	35.5	560	
180 000	160	–	–	–	–	–	2.91 12 400 3I/151	5.49 23 650 3I/153	–	–	–	–	–	–	–	–	–	–	160	2240	14
	125	–	–	–	–	–	3.4 14 700 3I/123	6.7 28 750 3I/123	7.72 33 150 3I/123	11.6 52 000 3I/128	16.4 75 500 3I/131	25.1 104 700 3I/119	35.1 151 000 3I/123	49.3 215 800 3I/125	67.3 290 000 3I/123	85.2 378 200 3I/127	100 444 900 3I/127	139 634 100 3I/131	125	1800	
	100	–	–	–	–	–	3.24 15 000 3I/103	6.74 30 550 3I/101	9.35 42 100 3I/100	13.2 63 700 3I/107	17.7 85 850 3I/108	27.8 125 100 3I/100	40.3 178 600 3I/98.5	56.8 251 700 3I/98.5	72.2 326 200 3I/100	92.6 436 600 3I/105	116 545 800 3I/105	154 713 200 3I/103	100	1400	
	90	–	–	–	–	–	–	–	9.47 42 650 3I/89.4	14.5 68 600 3I/93.7	16.9 79 400 3I/93.3	30.9 134 900 3I/86.4	42.5 190 100 3I/88.8	58.2 261 000 3I/89	82.1 371 200 3I/89.7	91.9 417 600 3I/90.1	115 522 000 3I/90.1	154 718 800 3I/92.7	90	1250	
	80	–	0.65 2 750 3I/75.2	0.73 3 230 3I/78.2	1.1 5 130 3I/82.7	1.27 5 930 3I/82.7	2.92 12 400 3I/75.5	5.58 23 650 3I/75.3	9.21 42 200 3I/81.4	13.2 63 700 3I/85.7	17.7 85 850 3I/86.1	26.7 126 100 3I/84	38.6 179 900 3I/82.7	54.5 253 500 3I/82.7	69.3 328 600 3I/84.3	93.8 435 600 3I/82.5	117 544 500 3I/82.5	156 711 500 3I/81.1	80	1120	
	71	–	–	–	–	–	–	–	9.75 44 700 3I/72.8	14.5 68 600 3I/74.9	20.4 95 750 3I/74.6	29.7 135 900 3I/72.6	41 192 500 3I/74.5	55.8 262 900 3I/74.7	79.1 375 600 3I/75.3	93.1 416 700 3I/71	116 520 800 3I/71	168 774 400 3I/73	71	1000	
	63	–	0.81 3 430 3I/60.1	0.81 3 570 3I/62.6	1.28 5 930 3I/66.3	1.49 6 940 3I/66.3	3.41 14 700 3I/61.5	6.8 28 700 3I/60.2	9.65 41 850 3I/62	14.2 62 950 3I/63.5	19 84 800 3I/63.8	28.4 124 600 3I/62.6	41.2 177 900 3I/61.7	58.2 250 600 3I/61.5	74 324 800 3I/62.7	92.9 436 400 3I/67.1	116 545 500 3I/67.1	154 712 800 3I/66	63	900	
	56	–	–	–	–	–	–	–	9.77 42 600 3I/55.4	15.7 68 600 3I/55.5	18.2 79 200 3I/55.3	31.5 134 400 3I/54.1	43.4 190 000 3I/55.5	59.3 260 000 3I/55.6	84 370 900 3I/56	91.8 417 700 3I/57.8	115 522 100 3I/57.8	154 718 900 3I/59.4	56	800	

For n_1 lower than 560 rpm see page 107.

$n_{N2} \cdot L_h$ rpm · h	i_N	50	63	64	80	81	100	125	140	160	180	200	225	250	280	320	321	360	i_N	n_1 rpm	n_{N2}
		Nominal output power P_{N2} [hp] Nominal output torque T_{N2} [lb in] Train of gears / ratio ... / i																			
180 000	50		0.78	0.91	1.63	1.92	3.3	6.95	9.39	14	18.8	27	39.1	55.2	70.1	93	116	154	50	710	14
		–	3 430	4 170	7 210	8 490	15 000	30 550	42 050	63 050	85 000	125 800	179 600	253 000	327 900	436 400	545 400	712 700			
			3I/49.4	3I/51.5	3I/49.8	3I/49.8	3I/51.2	3I/49.5	3I/50.4	3I/50.8	3I/51	3I/52.6	3I/51.8	3I/51.7	3I/52.7	3I/52.9	3I/52.9	3I/52			
	45								9.89	15.4	21.4	29.9	41.2	56.2	79.7	91.8	115	165	45	630	
		–	–	–	–	–	–	–	44 600	68 600	94 900	135 700	192 300	262 600	375 100	417 700	522 200	774 400			
									3I/45.1	3I/44.4	3I/44.2	3I/45.4	3I/46.6	3I/46.7	3I/47.1	3I/45.5	3I/45.5	3I/46.8			
	40		0.75	0.76	1.21	1.43	3.35	6.32	9.8	15.8	19.4	29.1	41.2	58.4	80.4	105	131	157	40	560	
		–	3 430	3 620	5 950	6 990	14 750	29 050	42 650	68 600	87 050	136 000	187 100	278 800	372 400	479 800	599 700	744 300			
			3I/40.8	3I/42.5	3I/43.6	3I/43.6	3I/39.1	3I/40.8	3I/38.7	3I/38.5	3I/39.9	3I/41.5	3I/40.4	3I/42.4	3I/41.2	3I/40.7	3I/40.7	3I/42.3			
160 000	160						2.63	4.93											160	2000	12.5
		–	–	–	–	–	12 550	23 800	–	–	–	–	–	–	–	–	–	–			
							3I/151	3I/153													
	125						3.08	6.06	6.91	10.5	14.8	22.4	31.4	44.1	60.2	76.7	90.2	125	125	1600	
		–	–	–	–	–	14 950	29 250	33 400	52 700	76 500	105 200	151 700	217 200	291 900	382 800	450 400	641 900			
							3I/123	3I/123	3I/123	3I/128	3I/131	3I/119	3I/123	3I/125	3I/123	3I/127	3I/127	3I/131			
	100						2.9	6.02	8.49	12	16.1	25.2	36.6	51.6	65.6	84.1	105	140	100	1250	
		–	–	–	–	–	15 000	30 550	42 800	64 800	87 350	127 300	181 700	256 000	331 900	444 200	555 200	725 500			
							3I/103	3I/101	3I/100	3I/107	3I/108	3I/100	3I/98.5	3I/98.5	3I/100	3I/105	3I/105	3I/103			
	90								8.51	13	15.2	28	38.2	53	73.8	83.7	105	138	90	1120	
		–	–	–	–	–	–	–	42 800	68 600	79 700	136 000	190 800	265 300	372 500	424 600	530 800	721 300			
									3I/89.4	3I/93.7	3I/93.3	3I/86.4	3I/88.8	3I/89	3I/89.7	3I/90.1	3I/90.1	3I/92.7			
	80		0.58	0.66	0.98	1.14	2.63	5	8.36	12	16.1	24.2	35.1	49.5	62.9	85.2	107	142	80	1000	
		–	2 760	3 240	5 130	5 930	12 550	23 750	42 950	64 800	87 350	128 200	183 100	257 900	334 300	443 200	554 000	723 800			
			3I/75.2	3I/78.2	3I/82.7	3I/82.7	3I/75.5	3I/75.3	3I/81.4	3I/85.7	3I/86.1	3I/84	3I/82.7	3I/82.7	3I/84.3	3I/82.5	3I/82.5	3I/81.1			
	71								8.83	13.1	18.5	26.8	37	51	72.4	85.1	106	151	71	900	
		–	–	–	–	–	–	–	45 000	68 600	96 450	136 000	192 900	267 100	381 600	423 400	529 200	774 400			
									3I/72.8	3I/74.9	3I/74.6	3I/72.6	3I/74.5	3I/74.7	3I/75.3	3I/71	3I/71	3I/73			
	63		0.72	0.74	1.15	1.35	3.09	6.15	8.73	12.8	17.2	25.7	37.3	52.6	66.9	84	105	140	63	800	
		–	3 430	3 640	6 000	7 060	14 950	29 200	42 600	64 050	86 350	126 900	181 100	255 100	330 700	444 300	555 400	725 600			
			3I/60.1	3I/62.6	3I/66.3	3I/66.3	3I/61.5	3I/60.2	3I/62	3I/63.5	3I/63.8	3I/62.6	3I/61.7	3I/61.5	3I/62.7	3I/67.1	3I/67.1	3I/66			
	56								8.7	13.9	16.2	28.3	38.7	53.6	74.8	83	104	137	56	710	
		–	–	–	–	–	–	–	42 750	68 600	79 500	136 000	190 700	264 800	372 300	425 300	531 600	721 600			
									3I/55.4	3I/55.5	3I/55.3	3I/54.1	3I/55.5	3I/55.6	3I/56	3I/57.8	3I/57.8	3I/59.4			
	50		0.69	0.82	1.46	1.71	2.93	6.17	8.48	12.6	16.9	24.4	35.3	49.8	63.4	84	105	139	50	630	
		–	3 430	4 250	7 300	8 550	15 000	30 550	42 800	64 200	86 550	128 100	182 900	257 600	333 900	444 300	555 400	725 700			
			3I/49.4	3I/51.5	3I/49.8	3I/49.8	3I/51.2	3I/49.5	3I/50.4	3I/50.8	3I/51	3I/52.6	3I/51.8	3I/51.7	3I/52.7	3I/52.9	3I/52.9	3I/52			
	45								8.87	13.7	19.4	26.6	36.8	50.9	72.1	83	104	147	45	560	
		–	–	–	–	–	–	–	45 000	68 600	96 400	136 000	192 900	267 300	381 900	425 200	531 600	774 400			
									3I/45.1	3I/44.4	3I/44.2	3I/45.4	3I/46.6	3I/46.7	3I/47.1	3I/45.5	3I/45.5	3I/46.8			
140 000	160						2.4	4.51											160	1800	11.2
		–	–	–	–	–	12 750	24 200	–	–	–	–	–	–	–	–	–	–			
							3I/151	3I/153													
	125						2.7	5.41	6.17	9.36	13.2	20	28	39.4	53.8	68.4	80.5	110	125	1400	
		–	–	–	–	–	15 000	29 850	34 050	53 750	78 050	107 400	154 800	221 700	297 900	390 600	459 500	646 100			
							3I/123	3I/123	3I/123	3I/128	3I/131	3I/119	3I/123	3I/125	3I/123	3I/127	3I/127	3I/131			
	100						2.6	5.39	7.74	10.9	14.7	23	33.3	47	59.7	76.6	95.8	127	100	1120	
		–	–	–	–	–	15 000	30 550	43 550	65 900	88 800	129 400	184 800	260 300	337 400	451 600	564 500	737 600			
							3I/103	3I/101	3I/100	3I/107	3I/108	3I/100	3I/98.5	3I/98.5	3I/100	3I/105	3I/105	3I/103			
	90								7.63	11.6	13.6	25	34.2	48.1	66.1	76	95.1	124	90	1000	
		–	–	–	–	–	–	–	42 950	68 600	79 950	136 000	191 500	269 900	373 800	432 000	539 900	723 900			
									3I/89.4	3I/93.7	3I/93.3	3I/86.4	3I/88.8	3I/89	3I/89.7	3I/90.1	3I/90.1	3I/92.7			
	80		0.53	0.6	0.89	1.02	2.41	4.57	7.65	11	14.7	22.1	32.1	45.3	57.6	77.9	97.4	129	80	900	
		–	2 800	3 290	5 130	5 930	12 750	24 100	43 600	65 850	88 750	130 300	186 000	262 100	339 700	450 300	562 900	735 400			
			3I/75.2	3I/78.2	3I/82.7	3I/82.7	3I/75.5	3I/75.3	3I/81.4	3I/85.7	3I/86.1	3I/84	3I/82.7	3I/82.7	3I/84.3	3I/82.5	3I/82.5	3I/81.1			

For n_1 lower than 560 rpm see page 107.

$n_{N2} \cdot L_h$ rpm · h	i_N	50	63	64	80	81	100	125	140	160	180	200	225	250	280	320	321	360	i_N	n_1 rpm	n_{N2}
		Nominal output power P_{N2} [hp] Nominal output torque T_{N2} [lb in] Train of gears / ratio ... / i																			
140 000	71	–	–	–	–	–	–	–	7.85 45 000 3I/72.8	11.6 68 600 3I/74.9	16.4 96 450 3I/74.6	23.8 136 000 3I/72.6	32.9 192 900 3I/74.5	46.2 271 900 3I/74.7	65.2 386 800 3I/75.3	77 431 000 3I/71	96.3 538 700 3I/71	135 774 400 3I/73	71	800	11.2
	63	–	0.64 3 430 3I/60.1	0.67 3 700 3I/62.6	1.04 6 110 3I/66.3	1.22 7 190 3I/66.3	2.75 15 000 3I/61.5	5.56 29 750 3I/60.2	7.89 43 400 3I/62	11.6 65 250 3I/63.5	15.5 87 900 3I/63.8	23.2 129 200 3I/62.6	33.7 184 400 3I/61.7	47.6 259 800 3I/61.5	60.5 336 700 3I/62.7	75.9 452 400 3I/67.1	94.9 565 500 3I/67.1	126 738 800 3I/66	63	710	
	56	–	–	–	–	–	–	–	7.75 42 950 3I/55.4	12.3 68 600 3I/55.5	14.4 79 800 3I/55.3	25.1 136 000 3I/54.1	34.5 191 400 3I/55.5	48.4 269 600 3I/55.6	66.7 373 700 3I/56	75 433 100 3I/57.8	93.7 541 300 3I/57.8	122 724 300 3I/59.4	56	630	
	50	–	0.62 3 430 3I/49.4	0.74 4 310 3I/51.5	1.3 7 300 3I/49.8	1.53 8 580 3I/49.8	2.6 15 000 3I/51.2	5.48 30 550 3I/49.5	7.68 43 600 3I/50.4	11.4 65 350 3I/50.8	15.2 87 500 3I/51	22 130 400 3I/52.6	31.9 186 200 3I/51.8	45.1 262 200 3I/51.7	57.3 339 900 3I/52.7	75.6 450 000 3I/52.9	95 565 400 3I/52.9	126 738 700 3I/52	50	560	
125 000	160	–	–	–	–	–	2.17 12 950 3I/151	4.08 24 600 3I/153	–	–	–	–	–	–	–	–	–	–	160	1600	10
	125	–	–	–	–	–	2.41 15 000 3I/123	4.92 30 400 3I/123	5.6 34 650 3I/123	8.5 54 700 3I/128	12 79 400 3I/131	18.2 109 200 3I/119	25.4 157 500 3I/123	35.8 225 500 3I/125	48.8 303 000 3I/123	62.2 397 400 3I/127	73.1 467 500 3I/127	98.1 646 100 3I/131	125	1250	
	100	–	–	–	–	–	2.32 15 000 3I/103	4.81 30 550 3I/101	6.93 43 700 3I/100	9.83 66 400 3I/107	13.3 90 350 3I/108	20.9 131 700 3I/100	30.2 187 600 3I/98.5	42.7 264 800 3I/98.5	54.3 343 300 3I/100	69.6 459 400 3I/105	87 574 300 3I/105	116 750 000 3I/103	100	1000	
	90	–	–	–	–	–	–	–	6.89 43 100 3I/89.4	10.5 68 600 3I/93.7	12.3 80 250 3I/93.3	22.5 136 000 3I/86.4	30.9 192 100 3I/88.8	44 274 300 3I/89	59.7 375 100 3I/89.7	69.5 438 900 3I/90.1	86.9 548 600 3I/90.1	112 726 300 3I/92.7	90	900	
	80	–	0.48 2 860 3I/75.2	0.54 3 350 3I/78.2	0.79 5 130 3I/82.7	0.92 6 000 3I/82.7	2.18 12 950 3I/75.5	4.14 24 550 3I/75.3	6.81 43 700 3I/81.4	9.83 66 400 3I/85.7	13.3 90 350 3I/86.1	20 132 600 3I/84	28.8 187 600 3I/82.7	41 266 800 3I/82.7	52.1 345 800 3I/84.3	70.5 458 400 3I/82.5	88.2 573 000 3I/82.5	117 748 700 3I/81.1	80	800	
	71	–	–	–	–	–	–	–	6.97 45 000 3I/72.8	10.3 68 600 3I/74.9	14.6 96 450 3I/74.6	21.1 136 000 3I/72.6	29.2 192 900 3I/74.5	41.7 276 900 3I/74.7	57.9 386 800 3I/75.3	69.6 438 800 3I/71	87 548 500 3I/71	119 774 400 3I/73	71	710	
	63	–	0.57 3 430 3I/60.1	0.6 3 770 3I/62.6	0.94 6 220 3I/66.3	1.1 7 320 3I/66.3	2.44 15 000 3I/61.5	5.02 30 250 3I/60.2	7.05 43 700 3I/62	10.5 66 400 3I/63.5	14 89 500 3I/63.8	21 131 500 3I/62.6	30.4 187 600 3I/61.7	43 264 500 3I/61.5	54.6 342 900 3I/62.7	68.6 460 600 3I/67.1	85.7 575 300 3I/67.1	114 750 000 3I/66	63	630	
	56	–	–	–	–	–	–	–	6.92 43 100 3I/55.4	11 68 600 3I/55.5	12.9 80 000 3I/55.3	22.3 136 000 3I/54.1	30.7 192 200 3I/55.5	43.8 274 400 3I/55.6	59.4 375 000 3I/56	67.2 437 000 3I/57.8	84.8 551 100 3I/57.8	109 727 000 3I/59.4	56	560	
112 000	160	–	–	–	–	–	1.94 13 200 3I/151	3.64 25 100 3I/153	–	–	–	–	–	–	–	–	–	–	160	1400	9
	125	–	–	–	–	–	2.16 15 000 3I/123	4.43 30 550 3I/123	5.1 35 250 3I/123	7.75 55 600 3I/128	10.9 80 750 3I/131	16.6 111 100 3I/119	23.2 160 100 3I/123	32.6 229 300 3I/125	44.5 308 100 3I/123	56.6 404 000 3I/127	66.6 475 300 3I/127	87.9 646 100 3I/131	125	1120	
	100	–	–	–	–	–	2.09 15 000 3I/103	4.33 30 550 3I/101	6.24 43 700 3I/100	8.85 66 400 3I/107	12.2 91 800 3I/108	19.1 133 800 3I/100	27.2 187 600 3I/98.5	39 269 100 3I/98.5	49.6 348 800 3I/100	63.7 466 800 3I/105	78.5 575 300 3I/105	104 750 000 3I/103	100	900	
	90	–	–	–	–	–	–	–	6.14 43 250 3I/89.4	9.29 68 600 3I/93.7	11 80 550 3I/93.3	20 136 000 3I/86.4	27.6 192 800 3I/88.8	39.8 278 800 3I/89	53.3 376 500 3I/89.7	62.9 446 800 3I/90.1	78.7 558 500 3I/90.1	99.8 729 000 3I/92.7	90	800	
	80	–	0.44 2 910 3I/75.2	0.49 3 420 3I/78.2	0.71 5 190 3I/82.7	0.83 6 110 3I/82.7	1.97 13 200 3I/75.5	3.74 25 000 3I/75.3	6.05 43 700 3I/81.4	8.73 66 400 3I/85.7	12 92 000 3I/86.1	18.1 135 100 3I/84	25.5 187 600 3I/82.7	37 271 600 3I/82.7	47.1 352 100 3I/84.3	63.7 466 700 3I/82.5	78.6 575 300 3I/82.5	104 750 000 3I/81.1	80	710	
	71	–	–	–	–	–	–	–	6.18 45 000 3I/72.8	9.15 68 600 3I/74.9	12.9 96 450 3I/74.6	18.7 136 000 3I/72.6	25.9 192 900 3I/74.5	37.3 278 800 3I/74.7	51.4 386 800 3I/75.3	62.9 446 800 3I/71	78.6 558 500 3I/71	106 774 400 3I/73	71	630	

For n_1 lower than 560 rpm see page 107.

$n_{N2} \cdot L_h$ rpm · h	i_N	50	63	64	80	81	100	125	140	160	180	200	225	250	280	320	321	360	i_N	n_1 rpm	n_{N2}
		Nominal output power P_{N2} [hp]																			
		Nominal output torque T_{N2} [lb in]																			
		Train of gears / ratio ... / i																			
112 000	63	–	0.51 3 430 3I/60.1	0.54 3 840 3I/62.6	0.85 6 330 3I/66.3	1 7 450 3I/66.3	2.17 15 000 3I/61.5	4.5 30 550 3I/60.2	6.27 43 700 3I/62	9.29 66 400 3I/63.5	12.7 91 100 3I/63.8	19 133 900 3I/62.6	27 187 600 3I/61.7	38.9 269 300 3I/61.5	49.4 349 000 3I/62.7	62.1 468 900 3I/67.1	76.2 575 300 3I/67.1	101 750 000 3I/66	63	560	**9**
100 000	160	–	–	–	–	–	1.73 13 200 3I/151	3.31 25 550 3I/153	–	–	–	–	–	–	–	–	–	–	160	1250	**8**
	125	–	–	–	–	–	1.93 15 000 3I/123	3.95 30 550 3I/123	4.64 35 850 3I/123	7.04 56 550 3I/128	9.89 81 850 3I/131	15 113 000 3I/119	21 162 900 3I/123	29.6 233 300 3I/125	40.4 313 400 3I/123	51.2 408 900 3I/127	60.4 482 400 3I/127	78.5 646 100 3I/131	125	1000	
	100	–	–	–	–	–	1.85 15 000 3I/103	3.85 30 550 3I/101	5.55 43 700 3I/100	7.87 66 400 3I/107	11 92 900 3I/108	17.3 136 000 3I/100	24.2 187 600 3I/98.5	35 271 700 3I/98.5	44.9 355 000 3I/100	56.9 469 100 3I/105	69.7 575 300 3I/105	92.4 750 000 3I/103	100	800	
	90	–	–	–	–	–	–	–	5.47 43 400 3I/89.4	8.25 68 600 3I/93.7	9.76 80 850 3I/93.3	17.7 136 000 3I/86.4	24.5 192 900 3I/88.8	35.3 278 800 3I/89	47.5 377 900 3I/89.7	56.9 454 900 3I/90.1	71.1 568 700 3I/90.1	88.7 730 000 3I/92.7	90	710	
	80	–	0.39 2 960 3I/75.2	0.44 3 480 3I/78.2	0.64 5 280 3I/82.7	0.75 6 220 3I/82.7	1.75 13 200 3I/75.5	3.38 25 450 3I/75.3	5.36 43 700 3I/81.4	7.74 66 400 3I/85.7	10.9 93 650 3I/86.1	16.2 136 000 3I/84	22.7 187 600 3I/82.7	32.9 271 700 3I/82.7	42.5 358 500 3I/84.3	56.8 469 100 3I/82.5	69.7 575 300 3I/82.5	92.4 750 000 3I/81.1	80	630	
	71	–	–	–	–	–	–	–	5.5 45 000 3I/72.8	8.13 68 600 3I/74.9	11.5 96 450 3I/74.6	16.6 136 000 3I/72.6	23 192 900 3I/74.5	33.2 278 800 3I/74.7	45.6 386 800 3I/75.3	56.9 454 800 3I/71	71.1 568 600 3I/71	94.2 774 400 3I/73	71	560	
90 000	160	–	–	–	–	–	1.55 13 200 3I/151	3.01 26 000 3I/153	–	–	–	–	–	–	–	–	–	–	160	1120	**7.1**
	125	–	–	–	–	–	1.74 15 000 3I/123	3.56 30 550 3I/123	4.24 36 400 3I/123	6.43 57 450 3I/128	8.9 81 850 3I/131	13.8 114 800 3I/119	19 163 700 3I/123	26.8 234 500 3I/125	36.9 318 500 3I/123	46.1 408 900 3I/127	54.3 482 400 3I/127	70.7 646 100 3I/131	125	900	
	100	–	–	–	–	–	1.65 15 000 3I/103	3.42 30 550 3I/101	4.92 43 700 3I/100	6.98 66 400 3I/107	9.76 93 250 3I/108	15.3 136 000 3I/100	21.4 187 600 3I/98.5	31.1 271 700 3I/98.5	40.6 361 500 3I/100	50.5 469 100 3I/105	61.9 575 300 3I/105	82 750 000 3I/103	100	710	
	90	–	–	–	–	–	–	–	4.87 43 600 3I/89.4	7.32 68 600 3I/93.7	8.69 81 150 3I/93.3	15.7 136 000 3I/86.4	21.7 192 900 3I/88.8	31.3 278 800 3I/89	42.3 379 300 3I/89.7	51.4 463 200 3I/90.1	64.2 579 000 3I/90.1	78.7 730 000 3I/92.7	90	630	
	80	–	0.35 2 960 3I/75.2	0.4 3 540 3I/78.2	0.58 5 380 3I/82.7	0.68 6 330 3I/82.7	1.55 13 200 3I/75.5	3.06 25 900 3I/75.3	4.77 43 700 3I/81.4	6.88 66 400 3I/85.7	9.68 93 800 3I/86.1	14.4 136 000 3I/84	20.1 187 600 3I/82.7	29.2 271 700 3I/82.7	38.5 364 900 3I/84.3	50.5 469 100 3I/82.5	62 575 300 3I/82.5	82.1 750 000 3I/81.1	80	560	
80 000	160	–	–	–	–	–	1.38 13 200 3I/151	2.74 26 450 3I/153	–	–	–	–	–	–	–	–	–	–	160	1000	**6.3**
	125	–	–	–	–	–	1.54 15 000 3I/123	3.16 30 550 3I/123	3.84 37 050 3I/123	5.72 57 550 3I/128	7.91 81 850 3I/131	12.4 116 800 3I/119	16.9 163 700 3I/123	23.8 234 500 3I/125	33.3 323 100 3I/123	40.9 408 900 3I/127	48.3 482 400 3I/127	62.8 646 100 3I/131	125	800	
	100	–	–	–	–	–	1.46 15 000 3I/103	3.03 30 550 3I/101	4.37 43 700 3I/100	6.2 66 400 3I/107	8.69 93 600 3I/108	13.6 136 000 3I/100	19 187 600 3I/98.5	27.6 271 700 3I/98.5	36.7 368 100 3I/100	44.8 469 100 3I/105	54.9 575 300 3I/105	72.8 750 000 3I/103	100	630	
	90	–	–	–	–	–	–	–	4.35 43 700 3I/89.4	6.51 68 600 3I/93.7	7.76 81 450 3I/93.3	14 136 000 3I/86.4	19.3 192 900 3I/88.8	27.8 278 800 3I/89	37.7 380 700 3I/89.7	46.5 471 600 3I/90.1	58.1 589 400 3I/90.1	70 730 000 3I/92.7	90	560	
71 000	160	–	–	–	–	–	1.24 13 200 3I/151	2.47 26 500 3I/153	–	–	–	–	–	–	–	–	–	–	160	900	**5.6**
	125	–	–	–	–	–	1.37 15 000 3I/123	2.81 30 550 3I/123	3.47 37 750 3I/123	5.08 57 550 3I/128	7.02 81 850 3I/131	11 116 800 3I/119	15 163 700 3I/123	21.1 234 500 3I/125	29.6 323 100 3I/123	36.3 408 900 3I/127	42.9 482 400 3I/127	55.7 646 100 3I/131	125	710	

For n_1 lower than 560 rpm see page 107.

7 - Helical gear reducer selection tables

$n_{N2} \cdot L_h$ rpm · h	i_N	Nominal output power P_{N2} [hp] / Nominal output torque T_{N2} [lb in] / Train of gears / ratio … / i																	i_N	n_1 rpm	n_{N2}
		50	63	64	80	81	100	125	140	160	180	200	225	250	280	320	321	360			
71 000	100	–	–	–	–	–	1.3 15 000 3I/103	2.7 30 550 3I/101	3.88 43 700 3I/100	5.51 66 400 3I/107	7.75 93 800 3I/108	12.1 136 000 3I/100	16.9 187 600 3I/98.5	24.5 271 700 3I/98.5	33.2 374 700 3I/100	39.8 469 100 3I/105	48.8 575 300 3I/105	64.7 750 000 3I/103	100	560	**5.6**
63 000	160	–	–	–	–	–	1.11 13 200 3I/151	2.2 26 500 3I/153	–	–	–	–	–	–	–	–	–	–	160	800	**5**
	125	–	–	–	–	–	1.22 15 000 3I/123	2.49 30 550 3I/123	3.13 38 450 3I/123	4.51 57 550 3I/128	6.23 81 850 3I/131	9.8 116 800 3I/119	13.3 163 700 3I/123	18.8 234 500 3I/125	26.2 323 100 3I/123	32.2 408 900 3I/127	38 482 400 3I/127	49.5 646 100 3I/131	125	630	
56 000	160	–	–	–	–	–	0.98 13 200 3I/151	1.95 26 500 3I/153	–	–	–	–	–	–	–	–	–	–	160	710	**4.5**
	125	–	–	–	–	–	1.08 15 000 3I/123	2.21 30 550 3I/123	2.8 38 700 3I/123	4.01 57 550 3I/128	5.54 81 850 3I/131	8.71 116 800 3I/119	11.9 163 700 3I/123	16.7 234 500 3I/125	23.3 323 100 3I/123	28.7 408 900 3I/127	33.8 482 400 3I/127	44 646 100 3I/131	125	560	
50 000	160	–	–	–	–	–	0.87 13 200 3I/151	1.73 26 500 3I/153	–	–	–	–	–	–	–	–	–	–	160	630	**4**
45 000	160	–	–	–	–	–	0.77 13 200 3I/151	1.54 26 500 3I/153	–	–	–	–	–	–	–	–	–	–	160	560	**3.55**

For n_1 lower than 560 rpm see page 107.

Summary of transmission ratios *i*, torques T_{N2} [lb in] valid for $n_1 \leqslant 90$ rpm

Train of gears	i_N	Transmission ratio *i* / Nominal output torque T_{N2} [lb in]																
		50	63	64	80	81	100	125	140	160	180	200	225	250	280	320	321	360
I	2	–	–	–	–	–	–	2 1) 22 400	–	1.95 34 500	–	2.05 73 000	–	2 1) 155 000	–	1.95 265 000	1.95 315 000	–
	2.24	–	–	–	–	–	–	2.28 25 700	2.3 1) 32 500	2.21 38 700	2.24 48 700	2.2 1) 80 000	2.27 103 000	2.33 180 000	2.3 1) 224 000	2.26 307 000	2.26 365 000	2.29 412 000
	2.5	–	2.53 3 450	–	2.44 6 700	–	2.55 11 800	2.53 29 000	2.53 35 500	2.44 42 500	2.5 1) 54 500	2.55 90 000	2.43 109 000	2.53 195 000	2.53 243 000	2.44 335 000	2.44 400 000	2.5 1) 450 000
	2.8	–	–	–	–	–	–	2.75 1) 30 700	2.82 40 000	2.81 48 700	2.83 61 500	2.82 103 000	2.83 128 000	2.81 218 000	2.82 272 000	2.81 387 000	2.81 450 000	2.83 515 000
	3.15	–	3.28 3 450	–	3.13 7 300	–	3.27 12 800	3.28 30 700	3.13 43 700	3.13 54 500	3.25 1) 71 000	3.27 118 000	3.18 140 000	3.28 243 000	3.19 307 000	3.13 425 000	3.13 500 000	3.25 1) 580 000
	3.55	–	–	–	–	–	–	3.62 29 000	3.64 41 200	3.62 60 000	3.6 1) 73 000	3.57 125 000	3.67 145 000	3.62 250 000	3.64 315 000	3.5 1) 387 000	3.5 1) 487 000	3.6 1) 580 000
	4	–	4 1) 3 070	–	4.16 6 700	–	3.92 12 500	4 1) 26 500	4.08 38 700	4.13 58 000	4.15 80 000	4.13 118 000	4.07 160 000	4 1) 236 000	4.08 315 000	4.07 412 000	4.07 487 000	4 1) 650 000
	4.5	–	–	–	–	–	–	4.45 24 300	4.5 1) 32 500	4.5 1) 56 000	4.67 71 000	4.5 1) 112 000	4.67 136 000	4.47 212 000	4.5 1) 265 000	4.5 1) 365 000	4.5 1) 450 000	4.6 1) 560 000
	5	–	5 1) 2 900	–	5.2 1) 5 450	–	4.82 11 800	5 1) 24 300	5 1) 30 700	4.92 51 500	5.07 65 000	4.92 103 000	5.07 125 000	5.08 212 000	5 1) 250 000	4.92 355 000	4.92 437 000	5.07 515 000
2I	6.3	6.42 1 320	6.53 3 070	6.86 1) 3 650	6.41 5 800	6.41 7 300	6.42 13 600	6.53 22 400	–	6.41 47 500	–	6.42 103 000	–	6.53 206 000	–	6.41 355 000	6.41 437 000	–
	8	8.01 1 800	8.26 3 450	7.99 4 370	8.03 7 300	8.03 8 750	8.01 15 000	8.26 30 700	–	8.03 56 000	–	8.01 136 000	–	8.26 280 000	–	8.03 487 000	8.03 615 000	–
	9	–	–	–	–	–	–	–	9.22 35 500	9.24 56 000	9.31 69 000	8.85 136 000	8.88 170 000	9.19 280 000	9.22 365 000	9.24 487 000	9.24 615 000	9.31 775 000
	10	10.2 1 800	10.7 3 450	11.2 1) 4 370	10.3 7 300	10.3 8 750	10.2 15 000	10.7 30 700	10.2 38 700	10.3 69 000	10.7 87 500	10.2 136 000	9.95 190 000	10.7 280 000	10.4 387 000	10.3 487 000	10.3 615 000	10.7 775 000
	11.2	–	–	–	–	–	–	–	11.9 1) 45 000	11.9 69 000	11.8 97 500	11.2 136 000	11.5 195 000	11.8 280 000	11.9 1) 387 000	11.5 1) 450 000	11.5 1) 560 000	11.8 775 000
	12.5	12.3 1 750	13.1 3 450	13.6 4 000	13.7 6 500	13.7 7 750	12.3 15 000	13.1 30 700	13.3 43 700	13.6 67 000	13.6 95 000	13 136 000	12.8 190 000	13.1 272 000	13.3 365 000	13.4 475 000	13.4 580 000	13.1 750 000
	14	–	–	–	–	–	–	–	14.7 1) 43 700	14.1 69 000	14.4 1) 97 500	13.9 136 000	14.6 175 000	14.6 250 000	14.7 1) 355 000	14.3 487 000	14.3 615 000	14.4 1) 775 000
	16	16.3 1 750	15.8 3 450	16.5 4 370	15.7 7 100	15.7 8 750	16.1 15 000	15.8 30 700	15.1 40 000	15.7 69 000	16.6 95 000	16.1 136 000	15.6 175 000	16.2 280 000	15.7 355 000	15.9 487 000	15.9 615 000	16 1) 750 000
	18	–	–	–	–	–	–	–	17.6 45 000	18.1 69 000	18 1) 87 500	17.6 136 000	18.1 195 000	17.8 280 000	17.9 387 000	17.8 487 000	17.8 615 000	18.3 775 000
	20	20.1 1 550	19.3 3 450	20.1 4 250	20.8 7 100	20.8 8 250	19.3 15 000	19.3 30 700	19.6 43 700	20.7 67 000	20.8 95 000	20.3 136 000	20 190 000	19.7 272 000	20.1 375 000	20.6 475 000	20.6 580 000	20.3 750 000
	22.4	–	–	–	–	–	–	–	21.7 42 500	22.5 1) 63 000	23.3 87 500	22.2 128 000	23 175 000	22 257 000	22.2 355 000	22.8 437 000	22.8 530 000	23.4 710 000
	25	24.4 1 360	24.1 3 000	25.1 3 650	26 1) 6 000	26 1) 7 100	23.7 13 200	24.1 26 500	24.1 38 700	24.6 58 000	25.4 82 500	24.2 118 000	25 165 000	25 236 000	24.6 325 000	25 412 000	25 487 000	25.7 650 000
	28	–	–	–	–	–	28.8 11 800	–	–	–	–	–	–	–	–	–	–	–
3I	28	–	–	–	–	–	–	–	29.1 42 500	28.4 56 000	28.6 69 000	27.2 136 000	27.3 190 000	28.7 280 000	28.8 387 000	30 487 000	30 615 000	30.3 775 000
	31.5	–	33.5 3 250	34.9 3 650	32.8 7 300	32.8 8 250	32.6 13 600	33.5 29 000	32.2 45 000	31.6 69 000	32.8 97 500	31.5 136 000	30.6 195 000	33.5 280 000	32.5 387 000	33.5 487 000	33.5 615 000	34.7 775 000
	35.5	–	–	–	–	–	–	–	37.5 45 000	36.5 69 000	36.3 97 500	34.4 136 000	35.4 195 000	36.9 280 000	37.2 387 000	37.4 487 000	37.4 615 000	38.4 775 000
	40	–	40.8 3 450	42.5 4 250	43.6 7 300	43.6 8 500	39.1 15 000	40.8 30 700	38.7 45 000	38.5 69 000	39.9 97 500	41.5 136 000	40.4 195 000	42.4 280 000	41.2 387 000	40.7 487 000	40.7 615 000	42.3 775 000
	45	–	–	–	–	–	–	–	45.1 45 000	44.4 69 000	44.2 97 500	45.4 136 000	46.6 195 000	46.7 280 000	47.1 387 000	45.5 1) 487 000	45.5 1) 615 000	46.8 1) 775 000
	50	–	49.4 3 450	51.5 4 370	49.8 7 300	49.8 8 750	51.2 15 000	49.5 30 700	50.4 43 700	50.8 67 000	51 95 000	52.6 136 000	51.8 190 000	51.7 272 000	52.7 375 000	52.9 475 000	52.9 580 000	52 1) 750 000
	56	–	–	–	–	–	–	–	55.4 45 000	55.5 69 000	55.3 92 500	54.1 136 000	55.5 195 000	55.6 280 000	56 387 000	57.8 487 000	57.8 615 000	59.4 1) 775 000
	63	–	60.1 3 450	62.6 4 250	66.3 7 300	66.3 8 500	61.5 15 000	60.2 30 700	62 43 700	63.5 67 000	63.8 95 000	62.6 136 000	61.7 190 000	61.5 272 000	62.7 375 000	67.1 1) 475 000	67.1 1) 580 000	66 1) 750 000
	71	–	–	–	–	–	–	–	72.8 45 000	74.9 69 000	74.6 97 500	72.6 136 000	74.5 195 000	74.7 280 000	75.3 387 000	71 1) 487 000	71 1) 615 000	73 775 000
	80	–	75.2 3 000	78.2 3 650	82.7 6 300	82.7 7 300	75.5 13 200	75.3 26 500	81.4 43 700	85.7 67 000	86.1 95 000	84 136 000	82.7 190 000	82.7 272 000	84.3 375 000	82.5 475 000	82.5 580 000	81.1 750 000
	90	–	–	–	–	–	–	–	89.4 45 000	93.7 69 000	93.3 95 000	86.4 136 000	88.8 195 000	89 280 000	89.7 387 000	90.1 487 000	90.1 615 000	92.7 775 000
	100	–	–	–	–	–	103 15 000	101 30 700	100 43 700	107 67 000	108 95 000	100 136 000	98.5 190 000	98.5 272 000	100 375 000	105 475 000	105 580 000	103 750 000
	125	–	–	–	–	–	123 15 000	123 30 700	123 38 700	128 58 000	131 82 500	119 118 000	123 165 000	125 236 000	123 325 000	127 412 000	127 487 000	131 650 000
	160	–	–	–	–	–	151 13 200	153 26 500	–	–	–	–	–	–	–	–	–	–

1) **Finite** transmission ratio.

This page is intentionally left blank.

8 – Dimensions, designs, mounting positions of helical gear reducers

8.1 - Gear reducers R I 110

Dimensions 110
Designs (direction of rotation) 111
Mounting positions 112
Lubrication details 113

8.2 - Gear reducers R 2I 114

Dimensions 114
Designs (direction of rotation) 115
Mounting positions 116
Lubrication details 117

8.3 - Gear reducers R 3I 118

Dimensions 118
Designs (direction of rotation) 119
Mounting positions 120
Lubrication details 121

8.4 - Gear reducers R 2I – Long model 122

Dimensions 122
Designs (direction of rotation) 123
Mounting positions 124
Lubrication details 125

8.5 - Gear reducers R 3I – Long model 126

Dimensions 126
Designs (direction of rotation) 126
Mounting positions 127
Lubrication details 128

The dimensions are expressed in mm

8.1 - Gear reducers R I

Dimensions

R I 63 ... 100

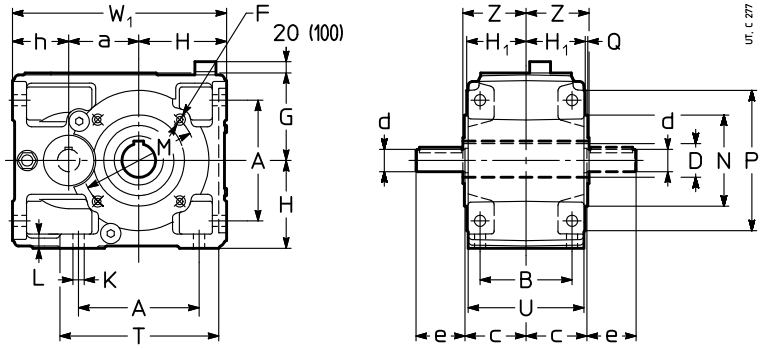

R I 125 ... 360

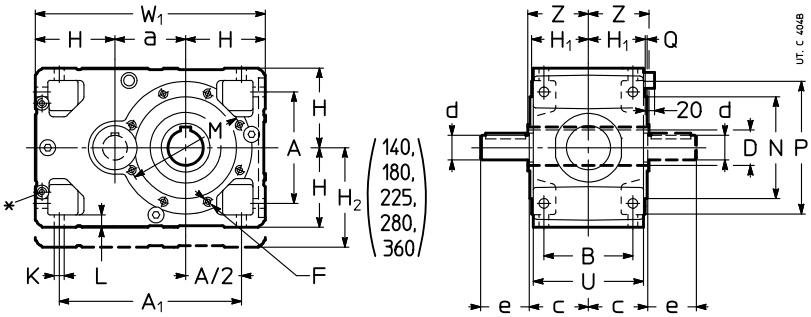

Size	a	A	A_1	B	c	D Ø H7	d Ø $i_N \leq 3.55$ $i_N \leq 4^{3)}$	e	d Ø $i_N \geq 4$ $i_N \geq 4.5^{3)}$	e	F 1)	H h11 G	H_1	H_2 h11	h h11	K Ø	L	M Ø	N Ø h6	P Ø	Q	T	U	W_1	Z	lb
63	63	102	–	90	61	30	24	50	19	40	M8	80	58.5	–	62	11.5	14	100	80	120	3	143	114	205	63	26
80	80	132	–	106	72	38	28	60	24	50	M10	100	69.5	–	70	14	17	130	110	160	3.5	180	135	250	75	51
100	100	172	–	131	87	48	32	80	28	60	M12	125	84.5	–	80	16	20	165	130	200	3.5	228	165	305	90	95
125	125	212	337	162	107	60	48	110	38	80	2)	150	103.5	–	–	18	23	215	180	250	4	–	201	425	110	185
140	140	212	352	162	107	70	48	110	38	80	2)	150	103.5	180	–	18	23	265	230	300	4	–	201	440	125	214
160	160	252	412	201	132	80	55	110	48	110	M16	180	128.5	–	–	22	28	265	230	300	4	–	249	520	136	326
180	180	252	432	201	132	90	55	110	48	110	M16	180	128.5	225	–	22	28	300	250	350	5	–	249	540	150	377
200	200	320	520	250	162	100	70	140	60	140	2)	225	158	–	–	27	34	350	300	400	5	–	307	650	167	578
225	225	320	545	250	162	110	70	140	60	140	M20	225	158	280	–	27	34	400	350	450	5	–	307	675	180	668
250	250	396	646	310	204	125	90	170	75	140	2)	280	195	–	–	33	42	500	450	550	5	–	380	810	206	1 030
280	280	396	676	310	204	140	90	170	75	140	M24	280	195	355	–	33	42	500	450	550	5	–	380	840	222	1 190
320, 321	320	510	830	386	256	160	110	210	95	170	2)	355	241	–	–	39	52	600	550	660	6	–	470	1030	254	1 834
360	360	510	870	386	256	180	110	210	95	170	M30	355	241	450	–	39	52	600	550	660	6	–	470	1070	273	2 123

* Machined surface and N. 2 threaded holes (dimensions in ch. 6 «Gear reducer input face») on opposite side (not in view) too.
1) Working length of thread 2 · F.
2) For dimension, number and angular position, see ch. 8.
3) Valid for sizes 140, 180, 225, 280 and 360.

Designs (direction of rotation)

R I 63 ... 100

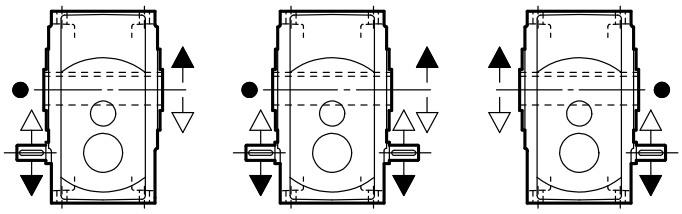

UP3A UP3D UP3L

UT. C 297

R I 125 ... 360

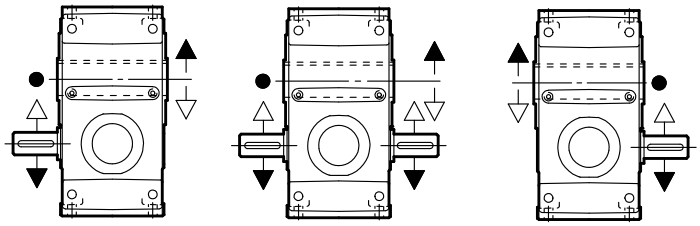

UP2A UP2D UP2L (140, 180, 225, 280, 360)

UT. C 407B

● Position of reference groove (see ch. 16) for radial load verification.

Mounting positions R I 63 ... 360

Unless otherwise stated, gear reducers are supplied in mounting position **B3** (see ch. 2).

Designs:

UP3A
UP3D
UP3L
UP2A
UP2D
UP2L

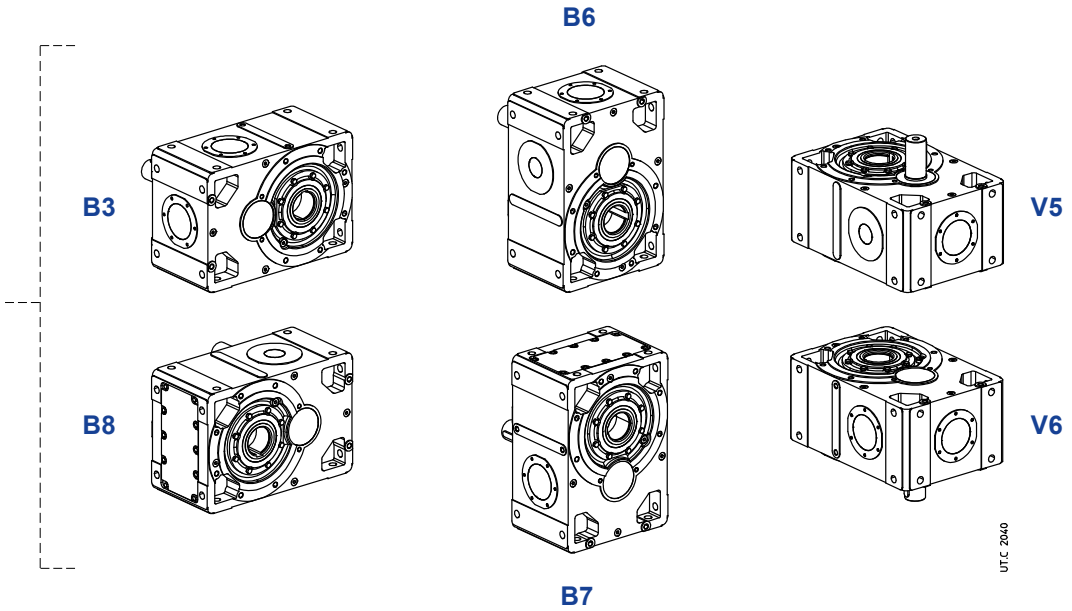

Oil quantity R I 63 ... 360

Stated oil quantities [gal] are approximate for provisioning. The exact oil quantity the gear reducer is to be filled with is defined by the level plug.

Mounting position	63	80	100	125	140	160	180	200	225	250	280	320, 321	360
B3	0.18	0.32	0.55	1.4	2.2	2.8	4.3	5.4	8.3	11	16	21	32
B8	0.18	0.32	0.55	1.4	1.5	2.8	2.8	5.4	5.5	11	11	21	21
B6	0.26	0.5	0.95	1.8	2.3	3.6	4.5	7.1	8.8	14	17	27	34
B7	0.21	0.4	0.69	2	2.6	4	5	7.7	9.8	15	19	29	37
V5	0.26	0.5	0.95	2.4	2.7	4.6	5.3	9	10	18	20	34	40
V6	0.26	0.5	0.95	1.2	1.3	2.5	2.5	4.8	4.9	9.2	9.5	18	19

Lubrication details

R I 100

Designs:

UP3A
UP3D
UP3L

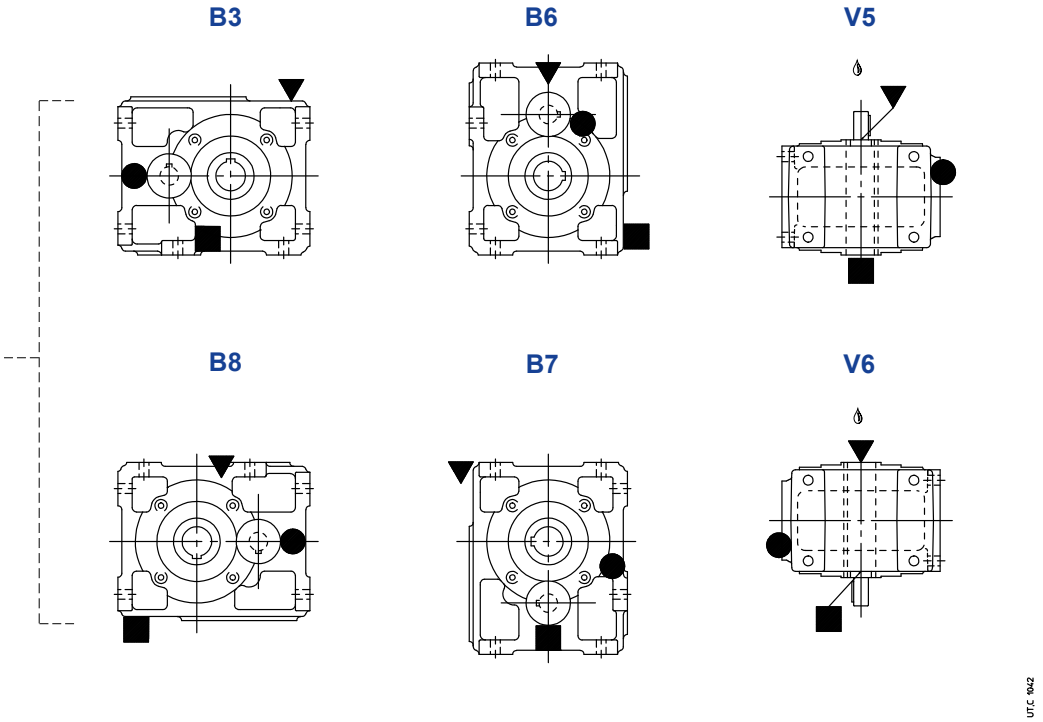

R I 125 ... 360

Designs:

UP2A
UP2D
UP2L

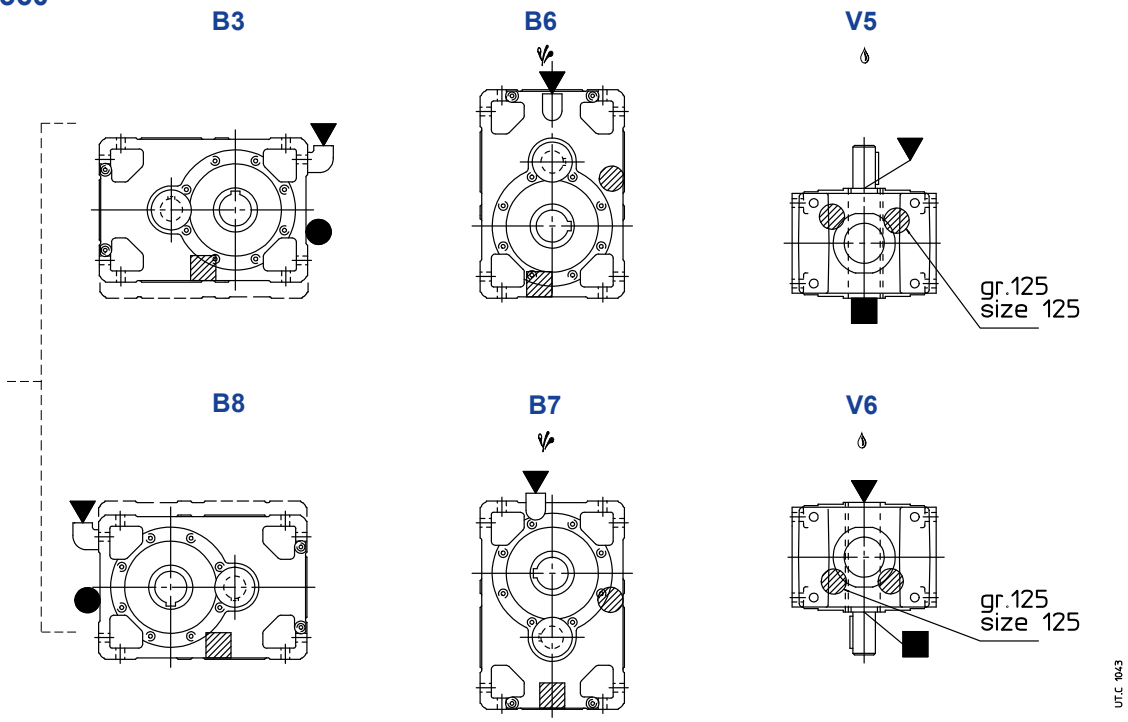

Possible high oil splash: for the corrective factor ft_3 of nominal thermal power Pt_N see ch. 4.

Possible bearing lubrication pump or lubrication device on high speed shaft (see ch. 17 (19)).

▼ oil filler plug
● oil level plug
■ oil drain plug
◍ oil level plug on opposite side (not in view)
▨ oil drain plug on opposite side (not in view)

8.2 - Gear reducers R 2I

Dimensions

R 2I 50 ... 125

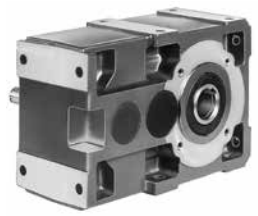

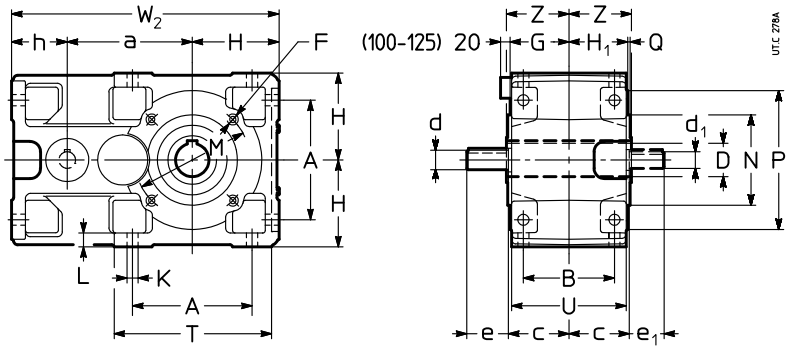

Size	a	A	B	c	D Ø H7	d Ø $i_N \leq 12.5$	e	d Ø $i_N \geq 16$	e	d_1 Ø	e_1	F 1)	H h11	H_1 G	h h11	K Ø	L	M Ø	N Ø h6	P Ø	Q	T	U	W_2	Z	lb
50	90	86	75	51	24	16	30	14	30	14	30	M6	67	49	50	9.5	12	85	70	105	2.5	120	95	207	53	20
63	113	102	90	61	30	19	40	16	30	16	30	M8	80	58.5	62	11.5	14	100	80	120	3	143	114	255	63	31
64	115	102	90	61	32	19	40	16	30	16	30	M8	80	58.5	62	11.5	14	100	80	120	3	143	114	257	63	31
80	142.5	132	106	72	38	24	50	19	40	19	40	M10	100	69.5	70	14	17	130	110	160	3.5	180	135	313	75	57
81	142.5	132	106	72	40	24	50	19	40	19	40	M10	100	69.5	70	14	17	130	110	160	3.5	180	135	313	75	57
100	180	172	131	87	48	28	60	24	50	24	50	M12	125	84.5	80	16	20	165	130	200	3.5	228	165	385	90	104
125	225	212	162	107	60	32	80	32	80	28	60	2)	150	103.5	100	18	23	215	180	250	4	274	201	475	110	185

R 2I 140 ... 360

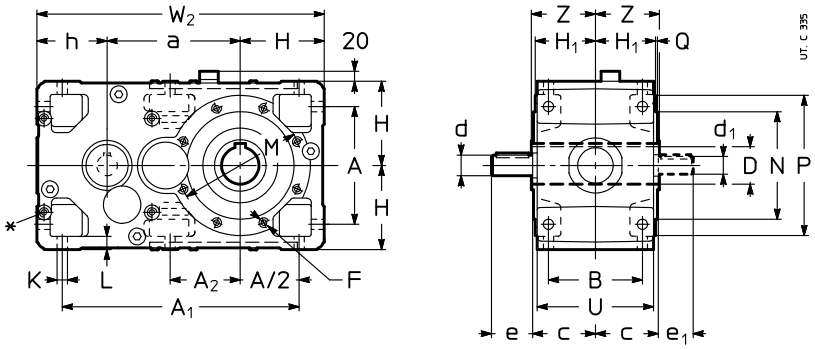

Size	a	A	A_1	A_2	B	c	D Ø H7	d Ø	e	d_1 Ø	e_1	F 1)	H h11	H_1	h h11	K Ø	L	M Ø	N Ø h6	P Ø	Q	U	W_2	Z	lb
140	240	212	427	127	162	107	70	32	80	28	60	2)	150	103.5	125	18	23	265	230	300	4	201	515	125	238
160	285	252	507	–	201	132	80	42	110	38	80	M16	180	128.5	150	22	28	265	230	300	4	249	615	136	388
180	305	252	527	170	201	132	90	42	110	38	80	M16	180	128.5	150	22	28	300	250	350	5	249	635	150	428
200	360	320	635	–	250	162	100	55	110	48	110	2)	225	158	180	27	34	350	300	400	5	307	765	167	681
225	385	320	660	223	250	162	110	55	110	48	110	M20	225	158	180	27	34	400	350	450	5	307	790	180	750
250	450	396	791	–	310	200	125	70	140	55	110	2)	280	195	225	33	42	500	450	550	5	380	955	206	1 197
280	480	396	821	277	310	200	140	70	140	55	110	M24	280	195	225	33	42	500	450	550	5	380	985	222	1 316
320, 321	570	510	1005	–	386	245	160	90	170	70	140	2)	355	241	280	39	52	600	550	660	6	470	1205	254	2 535
360	610	510	1045	358	386	245	180	90	170	70	140	M30	355	241	280	39	52	600	550	660	6	470	1245	273	2 866

∗ Machined surface and N.4 threaded holes (dimensions in ch. 6 «Gear reducer input face») on opposite side (not in view) too.
1) Working length of thread 2 · F.
2) For dimension, number and angular position see ch. 6.

42

Designs (direction of rotation)

R 2I 50 ... 125

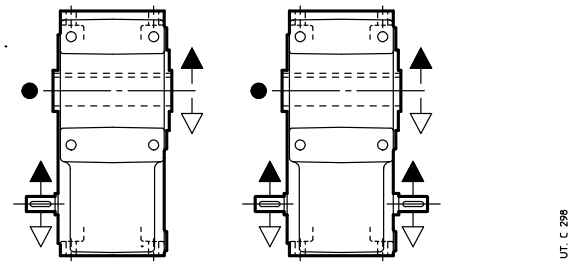

UP2A UP2D

R 2I 140 ... 360

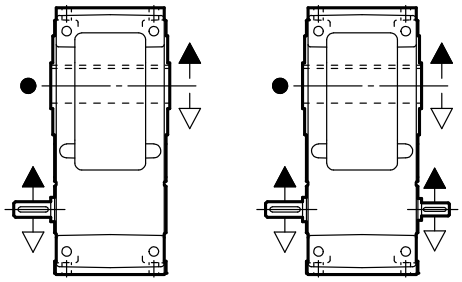

UP2A UP2D

● Position of the reference groove (see ch. 16) for the verification of the radial load.

Mounting positions

Unless otherwise stated, gear reducers are supplied in mounting position **B3** (see ch. 2).

R 2I 50 ... 125

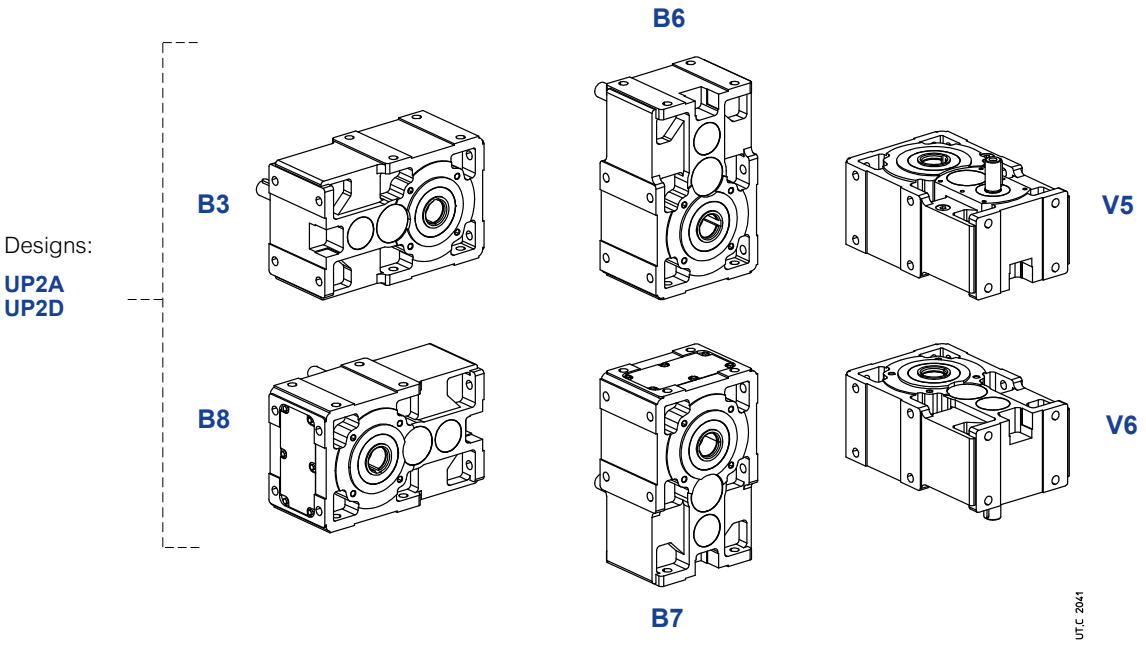

R 2I 140 ... 360

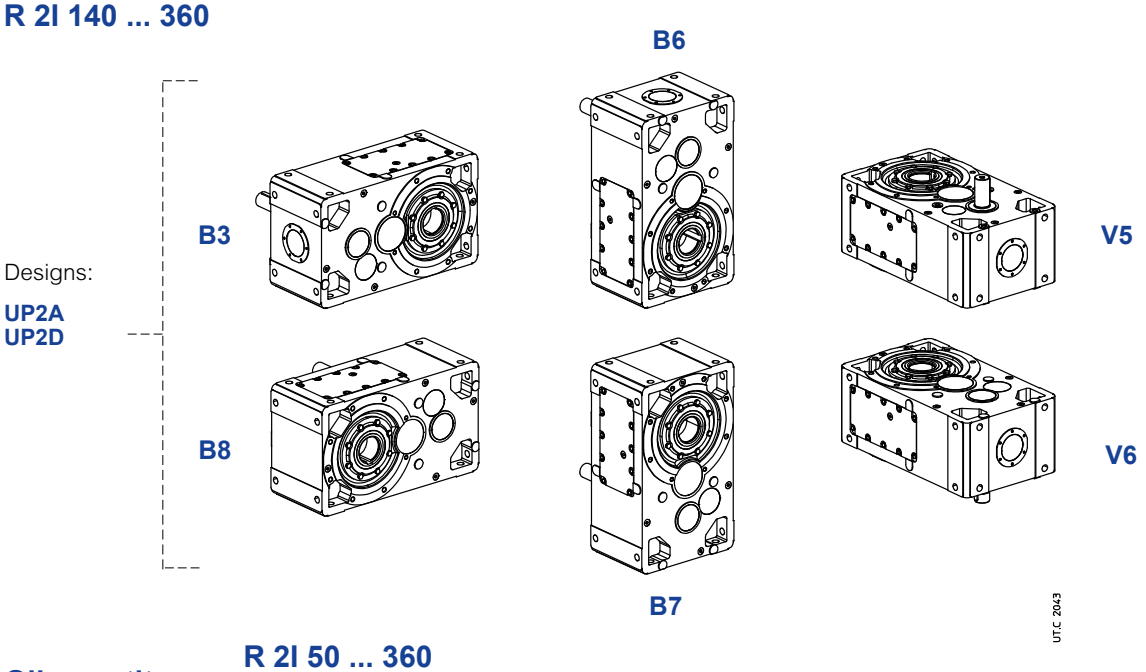

Oil quantity

R 2I 50 ... 360

Stated oil quantities [gal] are approximate for provisioning. The exact oil quantity the gear reducer is to be filled with is defined by the level plug.

Mounting position	50	63, 64	80, 81	100	125	140	160	180	200	225	250	280	320, 321	360
B3	0.16	0.24	0.4	0.85	1.5	1.7	3.2	3.4	6.6	6.9	12	13	26	26
B8	0.16	0.24	0.4	0.85	1.5	1.7	3.2	3.4	6.6	6.9	12	13	26	26
B6	0.24	0.37	0.71	1.4	2.8	2.9	5.3	5.5	10	11	20	21	40	41
B7	0.21	0.32	0.61	1.3	2.4	2.6	4.8	5	9.2	9.8	18	19	36	37
V5	0.21	0.32	0.61	1.3	2.4	2.6	4.8	5	9.2	9.8	18	19	36	37
V6	0.21	0.32	0.61	1.3	2.4	2.6	4.8	5	9.2	9.8	18	19	36	37

Lubrication details

R 2I 100, 125

Designs:

UP2A
UP2D

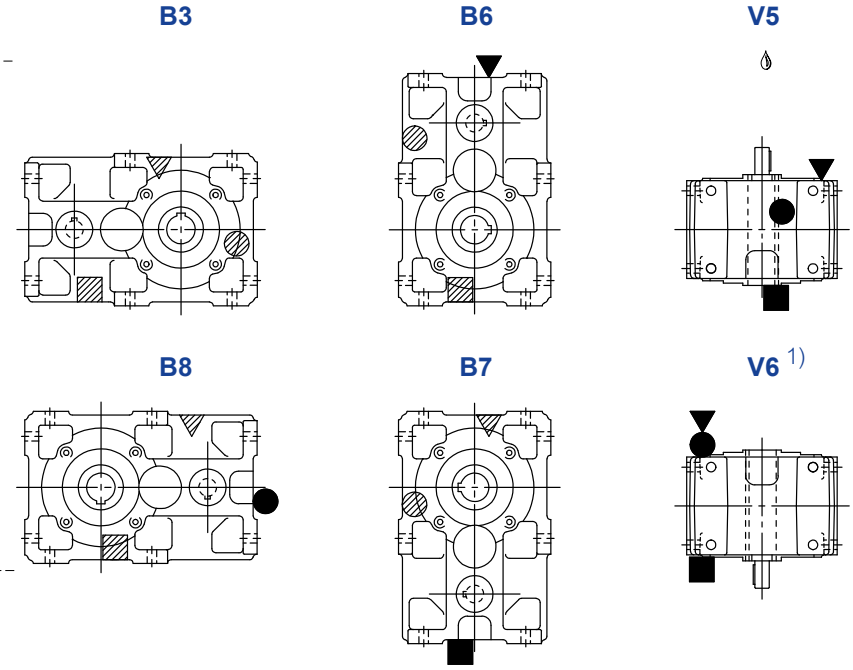

UTC 0644

R 2I 140 ... 360

Designs:

UP2A
UP2D

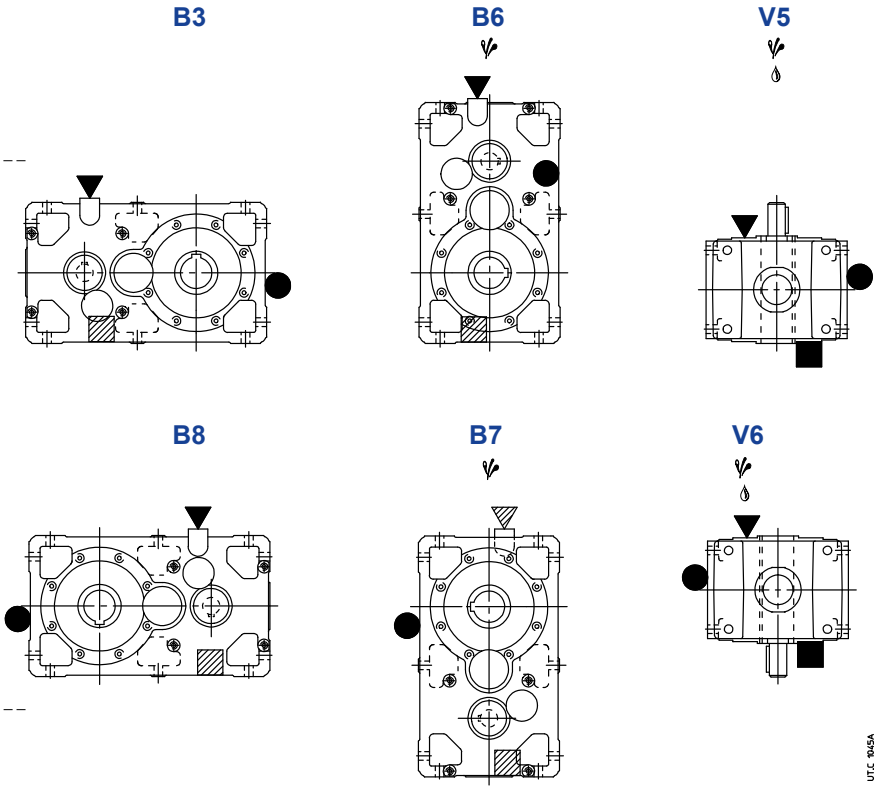

UTC 0645A

Possible high oil splash: for the corrective factor f_{t_3} of nominal thermal power Pt_N see ch. 4.

Possible bearing lubrication pump or lubrication device on high speed shaft (see ch. 17 (19)).

1) See also ch. 6 page 43.

▼ oil filler plug
● oil level plug
■ oil drain plug
▼● oil filler plug with oil level dip stick

▽ oil filler plug on opposite side (not in view)
◍ oil level plug on opposite side (not in view)
▨ oil drain plug on opposite side (not in view)

8.3 - Gear reducers R 3I

Dimensions

R 3I 63 ... 125

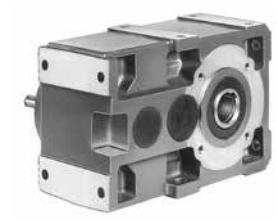

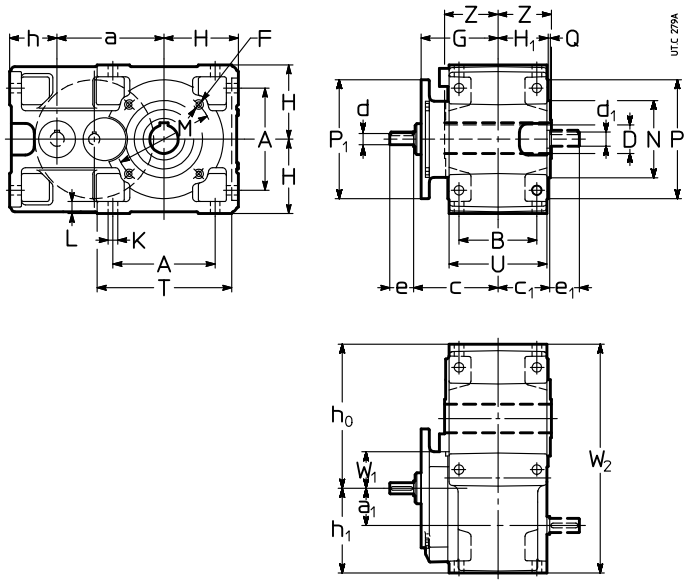

Size	a	a_1	A	B	c	c_1	D Ø H7	d Ø $i_N \leq 80$	e	d Ø $i_N \geq 100$	e	d_1 Ø	e_1	F 1)	G	H h11	H_1	h h11	h_0 h11	h_1 h11	K Ø	L	M Ø	N Ø h6	P Ø	P_1 Ø	Q	T	U	W_1	W_2	Z	lb
63	113	40	102	90	99	61	30	11	23	–	–	16	30	M8	90	80	58.5	62	153	102	11.5	14	100	80	120	140 3)	3	143	114	40	255	63	37
64	115	40	102	90	99	61	32	11	23	–	–	16	30	M8	90	80	58.5	62	155	102	11.5	14	100	80	120	140 3)	3	143	114	40	257	63	37
80	142.5	50	132	106	117	72	38	14	30	–	–	19	40	M10	108	100	69.5	70	192.5	120	14	17	130	110	160	160 3)	3.5	180	135	50	313	75	64
81	142.5	50	132	106	117	72	40	14	30	–	–	19	40	M10	108	100	69.5	70	192.5	120	14	17	130	110	160	160 3)	3.5	180	135	50	313	75	64
100	180	62.5	172	131	141	87	48	19	40	16	30	24	50	M12	130	125	84.5	80	242	143	16	20	165	130	200	200	3.5	228	165	62	385	90	115
125	225	80	212	162	170	107	60	24	50	19	40	28	60	2)	159	150	103.5	100	295	180	18	23	215	180	250	200	4	274	201	86	475	110	203

R 3I 140 ... 360

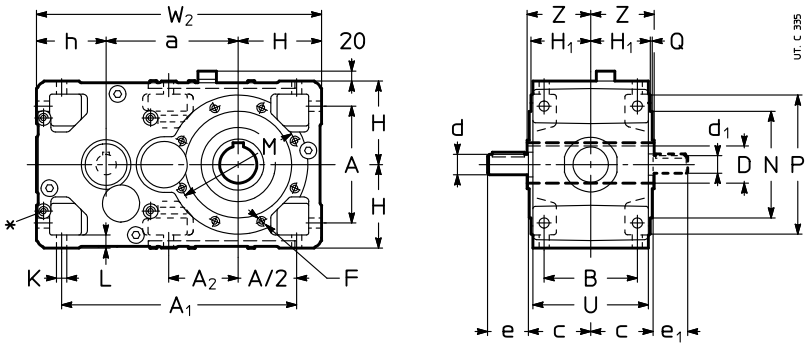

Size	a	A	A_1	A_2	B	c	D Ø H7	d Ø $i_N \leq 63$	e	d Ø $i_N \geq 71$	e	d_1 Ø	e_1	F 1)	H h11	H_1	h h11	K Ø	L	M Ø	N Ø h6	P Ø	Q	U	W_2	Z	lb
140	240	212	427	127	162	107	70	28	60	24	50	24	50	2)	150	103.5	125	18	23	265	230	300	4	201	515	125	238
160	285	252	507	–	201	132	80	32	80	28	60	28	60	M16	180	128.5	150	22	28	265	230	300	4	249	615	136	388
180	305	252	527	170	201	132	90	32	80	28	60	28	60	M16	180	128.5	150	22	28	300	250	350	5	249	635	150	428
200	360	320	635	–	250	162	100	42	110	38	80	38	80	2)	225	158	180	27	34	350	300	400	5	307	765	167	681
225	385	320	660	223	250	162	110	42	110	38	80	38	80	M20	225	158	180	27	34	400	350	450	5	307	790	180	750
250	450	396	791	–	310	200	125	55	110	48	110	45	110	2)	280	195	225	33	42	500	450	550	5	380	955	206	1 197
280	480	396	821	277	310	200	140	55	110	48	110	45	110	M24	280	195	225	33	42	500	450	550	5	380	985	222	1 316
320, 321	570	510	1005	–	386	245	160	70	140	55	110	55	110	2)	355	241	280	39	52	600	550	660	6	470	1205	254	2 535
360	610	510	1045	358	386	245	180	70	140	55	110	55	110	M30	355	241	280	39	52	600	550	660	6	470	1245	273	2 866

∗ Machined surface and N.4 threaded holes (dimensions in ch. 6 «Gear reducer input face») on opposite side (not in view) too.
1) Working length of thread 2 · F.
2) For dimension, number and angular position see ch. 6.
3) Square flange: for dimensions see ch. 6.

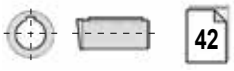

Designs (direction of rotation)

R 3I 63 ... 125

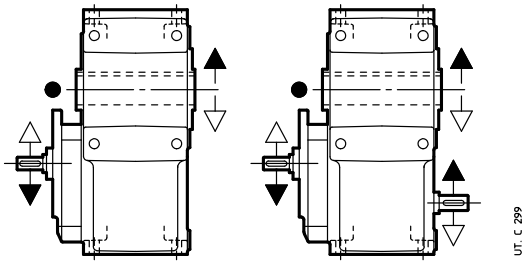

UP2A UP2D

R 3I 140 ... 360

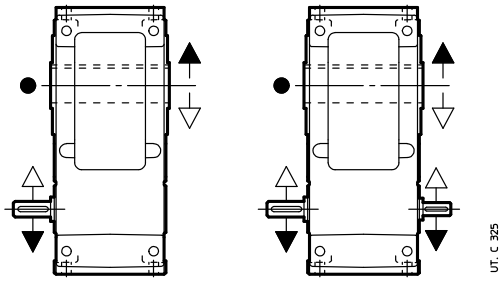

UP2A UP2D

● Position of the reference groove (see ch. 16) for radial load verification.

Mounting positions

Unless otherwise stated, gear reducers are supplied in mounting position **B3** (see ch. 2).

R 3I 63 ... 125

Designs:

UP2A
UP2D

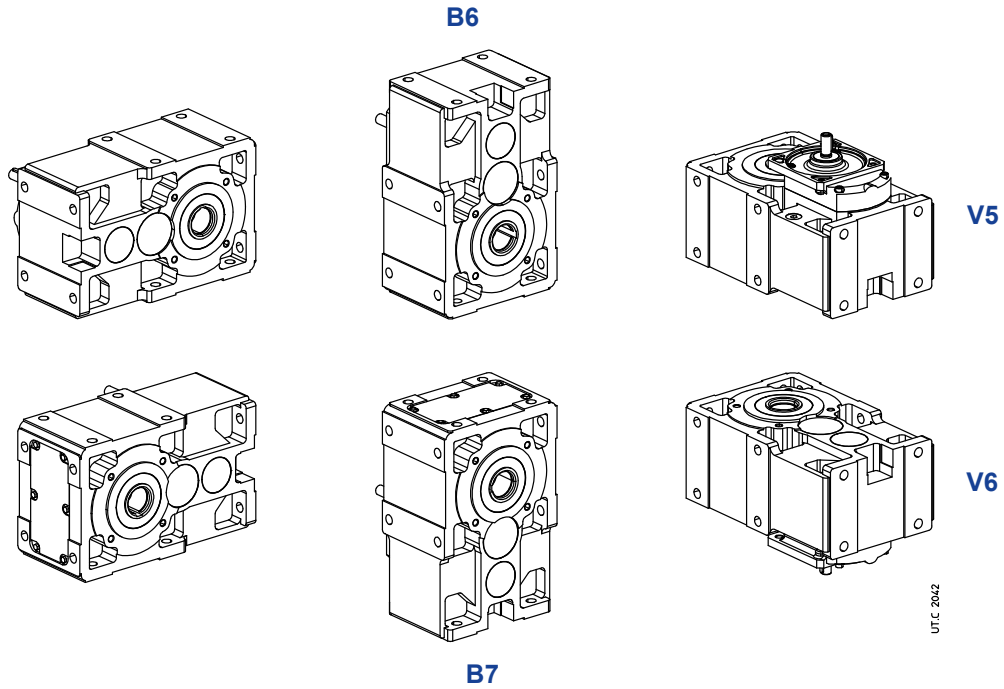

R 3I 140 ... 360

Designs:

UP2A
UP2D

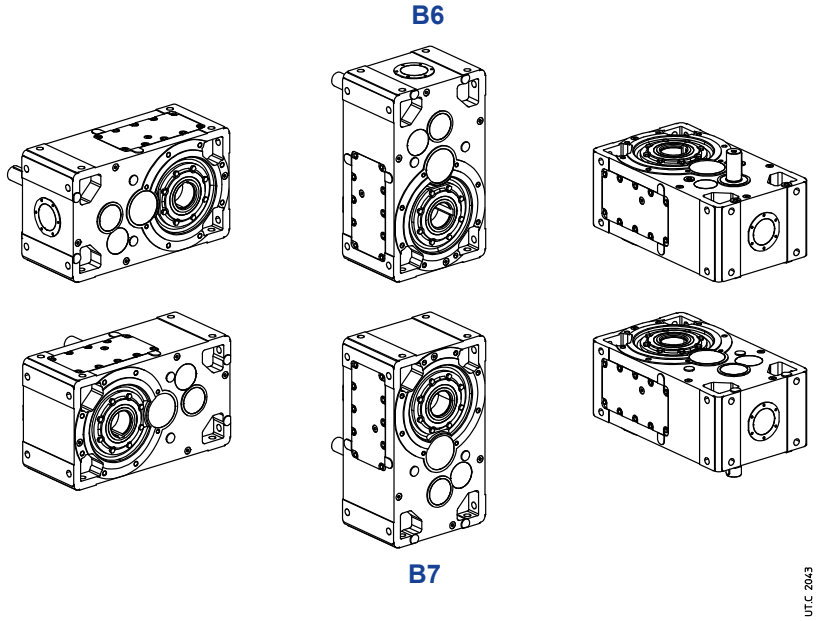

Oil quantity R 3I 63 ... 360

Stated oil quantities [gall] are approximate for provisioning. The exact oil quantity the gear reducer is to be filled with is defined by the level plug.

Mounting position	63, 64	80, 81	100	125	140	160	180	200	225	250	280	320, 321	360
B3	0.26	0.45	0.87	1.6	1.7	3.2	3.4	6.6	6.9	12	13	26	26
B8	0.26	0.45	0.87	1.6	2.6	4.8	5	9.2	9.8	18	19	36	37
B6	0.4	0.77	1.5	2.7	2.6	4.8	5	9.2	9.8	18	19	36	37
B7	0.34	0.66	1.3	2.3	2.6	4.8	5	9.2	9.8	18	19	36	37
V5	0.34	0.66	1.3	2.3	2.6	4.8	5	9.2	9.8	18	19	36	37
V6	0.34	0.66	1.3	2.3	2.6	4.8	5	9.2	9.8	18	19	36	37

Lubrication details

R 3I 100, 125

Designs:

UP2A
UP2D

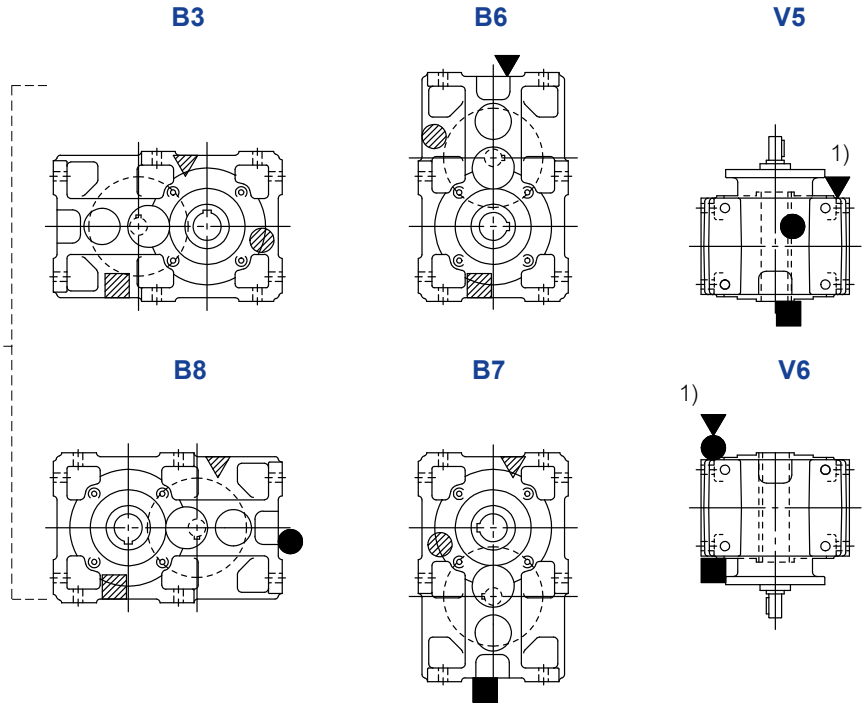

R 3I 140 ... 360

Designs:

UP2A
UP2D

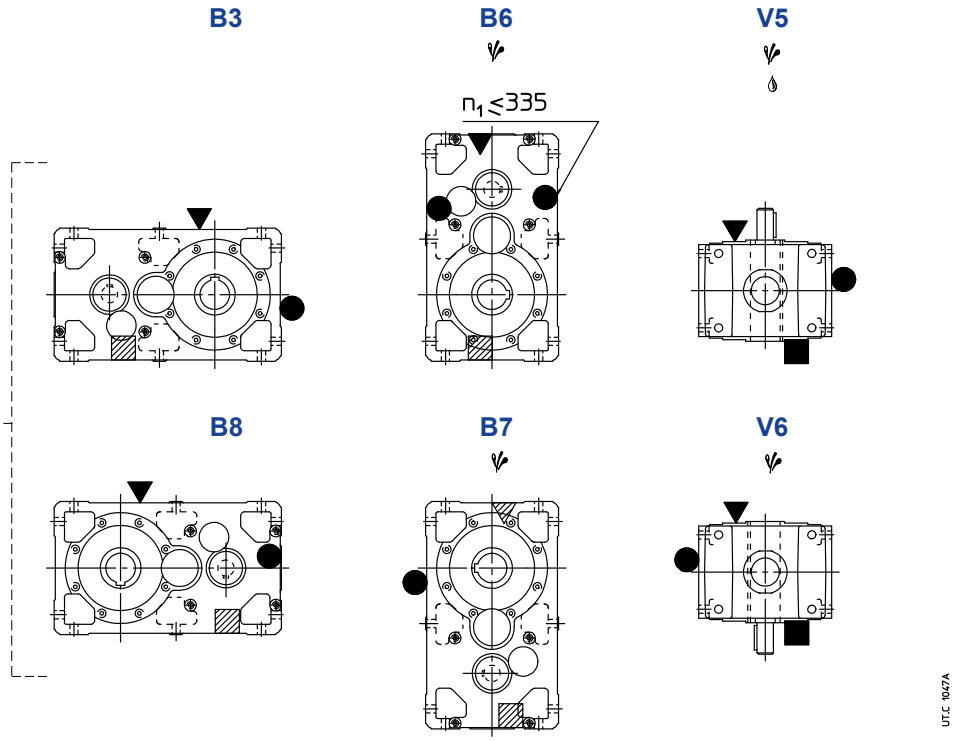

Possible high oil splash: for the corrective factor f_{t_3} of nominal thermal power Pt_N see ch. 4.

Possible bearing lubrication pump or lubrication device on high speed shaft (see ch. 17 (19)).

1) See also ch. 6 page. 43.

▼ oil filler plug
● oil level plug
■ oil drain plug
▼● oil filler plug with oil level dip stick

▽ oil filler plug on opposite side (not in view)
◍ oil level plug on opposite side (not in view)
▨ oil drain plug on opposite side (not in view)

8.4 - Gear reducers R 2I – Long model

Dimensions

R 2I 100, 125 – Long model

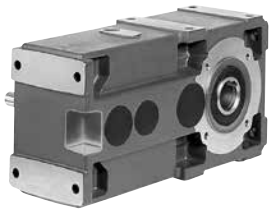

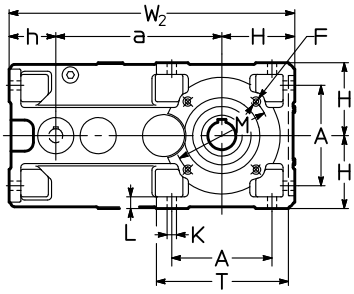

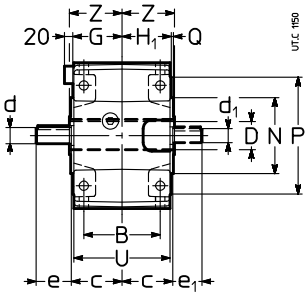

Size	a	A	B	c	D Ø H7	d Ø $i_N \leq 12.5$	e	d Ø $i_N \geq 16$	e	d_1 Ø	e_1	F 1)	H h11	H_1 G	h h11	K Ø	L	M Ø	N Ø h6	P Ø	Q	T	U	W_2	Z	lb
100	284.7	172	131	87	48	28	60	24	50	24	50	M12	125	84.5	80.3	16	20	165	130	200	3.5	228	165	490	90	123
125	358	212	162	107	60	32	80	32	80	28	60	2)	150	103.5	100	18	23	215	180	250	4	274	201	608	110	220

R 2I 140 ... 360 – Long model

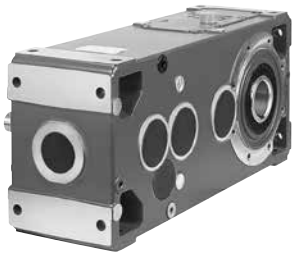

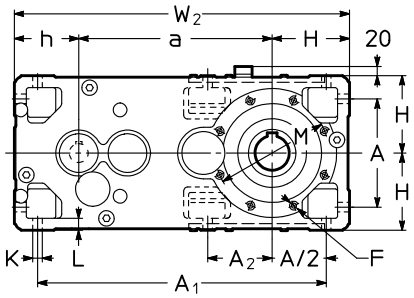

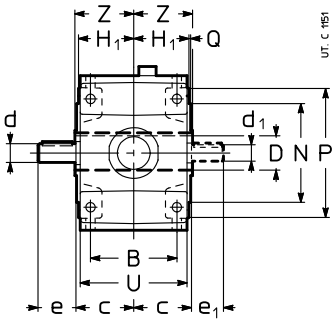

Size	a	A	A_1	A_2	B	c	D Ø H7	d Ø	e	d_1 Ø	e_1	F 1)	H h11	H_1	h h11	K Ø	L	M Ø	N Ø h6	P Ø	Q	U	W_2	Z	lb
140	373	212	560	127	162	107	70	32	80	28	60	2)	150	103.5	125	18	23	265	230	300	4	201	648	125	273
160	450	252	672	–	201	132	80	42	110	38	80	M16	180	128.5	150	22	28	265	230	300	4	249	780	136	540
180	470	252	692	170	201	132	90	42	110	38	80	M16	180	128.5	150	22	28	300	250	350	5	249	800	150	489
200	556	320	831	–	250	162	100	55	110	48	110	2)	225	158	180	27	34	350	300	400	5	307	961	167	787
225	581	320	856	223	250	162	110	55	110	48	110	M20	225	158	180	27	34	400	350	450	5	307	986	180	858
250	690	396	1031	–	310	200	125	70	140	55	110	2)	280	195	225	33	42	500	450	550	5	380	1195	206	1 378
280	720	396	1061	277	310	200	140	70	140	55	110	M24	280	195	225	33	42	500	450	550	5	380	1225	222	1 504
320, 321	870	510	1305	–	386	245	160	90	170	70	140	2)	355	241	280	39	52	600	550	660	6	470	1505	254	2 844
360	910	510	1345	358	386	245	180	90	170	70	140	M30	355	241	280	39	52	600	550	660	6	470	1545	273	3 186

1) Working length of thread 2 · F.
2) For dimension, number and angular position see ch. 6.

42

Designs (direction of rotation)

R 2I 100, 125 – Long model

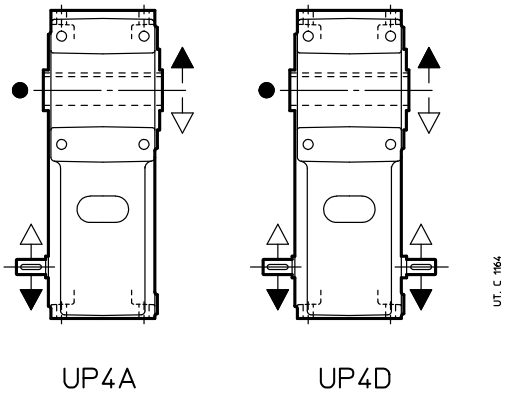

R 2I 140 ... 360 – Long model

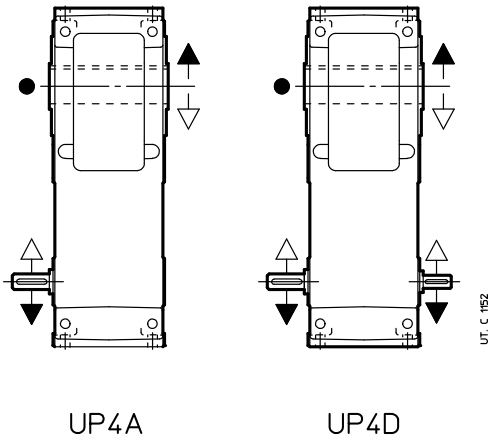

● Position of reference groove (see ch. 16) for radial load verification.

Mounting positions

Unless otherwise stated, gear reducers are supplied in mounting position **B3** (see ch. 2).

R 2I 100, 125 – Long model

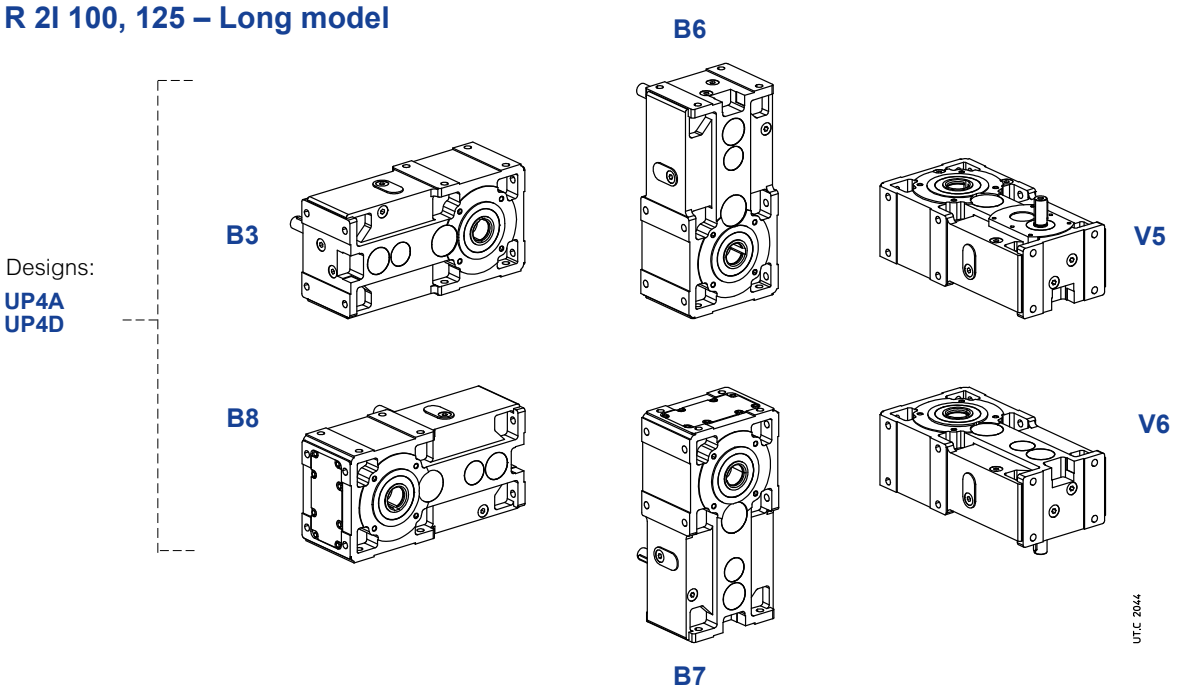

R 2I 140 ... 360 – Long model

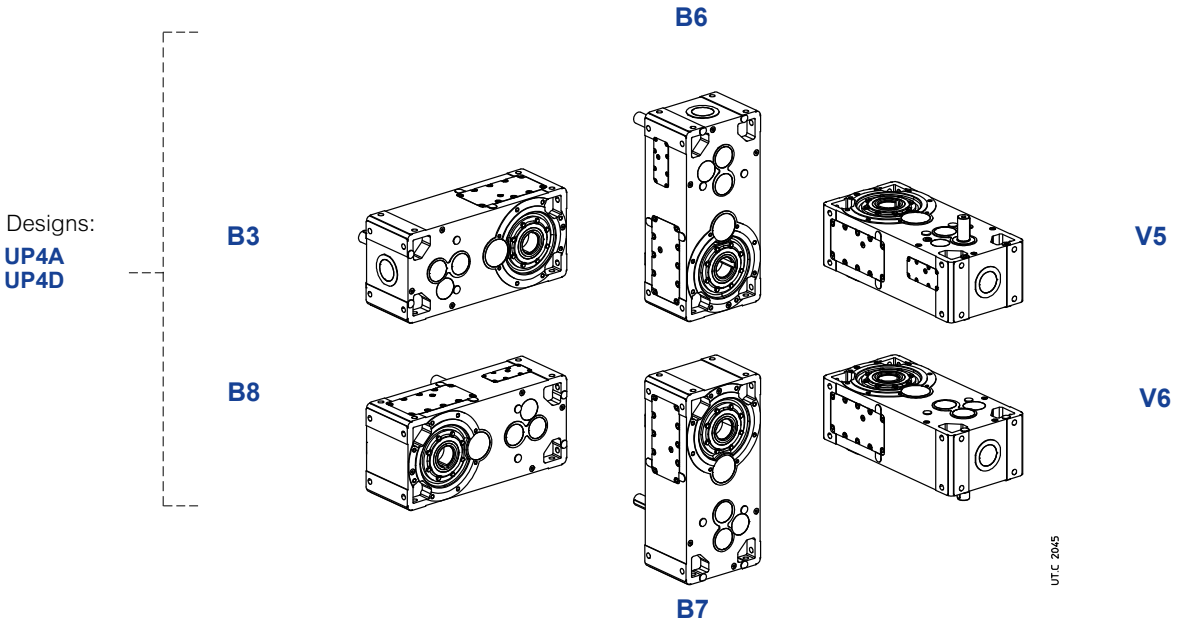

Oil quantity R 2I 100... 360 – Long model

Stated oil quantities [gal] are approximate for provisioning. The exact oil quantity the gear reducer is to be filled with is defined by the level plug.

Mounting position	100	125	140	160	180	200	225	250	280	320, 321	360
B3	1.1	2.1	2.3	4.2	4.6	8.7	9	16	17	33	34
B8	1.1	2.1	2.3	4.2	4.6	8.7	9	16	17	33	34
B6	2.1	4.2	4.3	7.9	8.2	15	16	29	31	57	58
B7	2	3.7	4	7.4	7.7	14	15	27	29	53	53
V5	1.7	1.7	3.5	6.3	6.6	12	13	24	25	47	48
V6	3.2	3.2	3.5	6.3	6.6	12	13	24	25	47	48

Lubrication details

R 2I 100, 125 – Long model

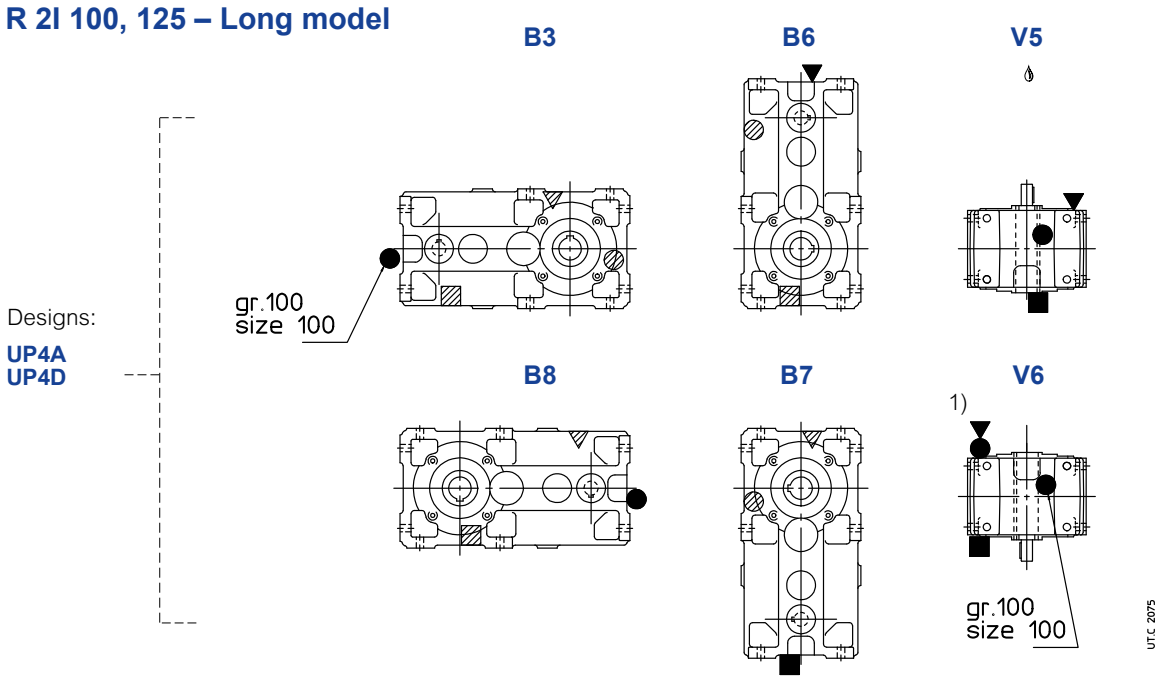

R 2I 140 ... 360 – Long model

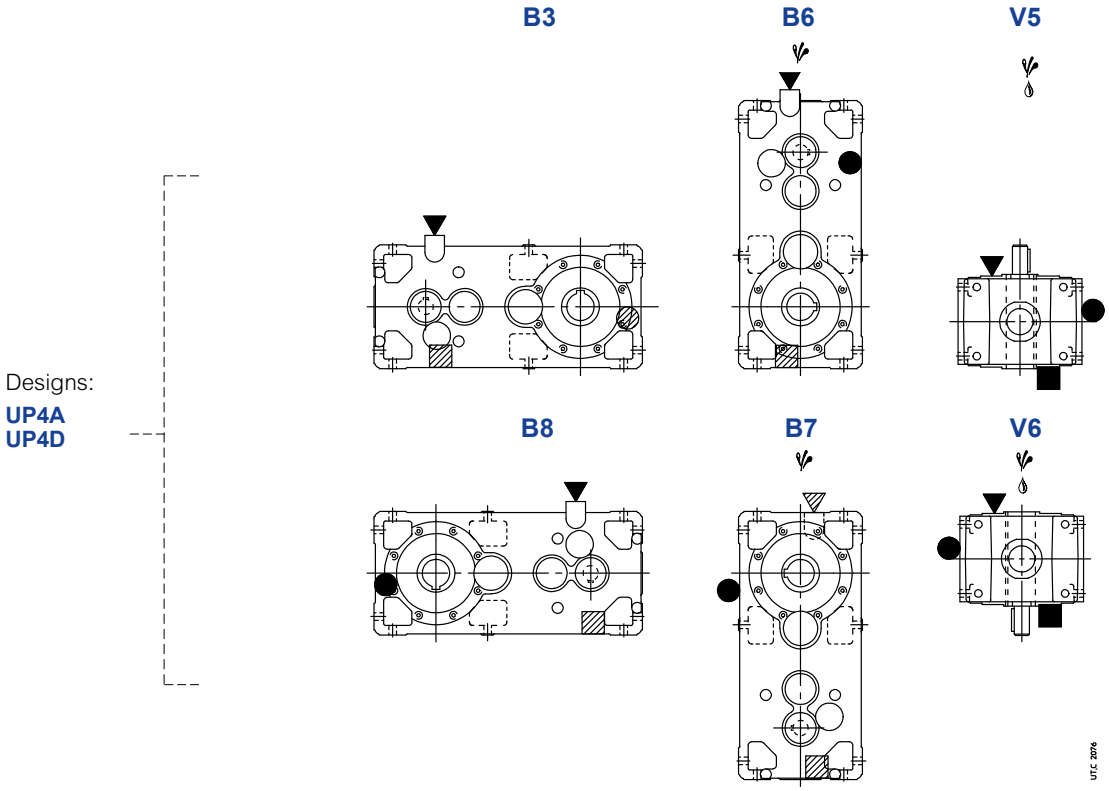

Possible high oil splash: for the corrective factor ft_3 of nominal thermal power Pt_N see ch. 4.

Possible bearing lubrication pump or lubrication device on high speed shaft (see ch. 17 (19)).

1) See also ch. 6 page. 43.

▼ oil filler plug
● oil level plug
■ oil drain plug
▼ ● oil drain plug with oil level dip stick

▽ oil filler plug on opposite side (not in view)
◍ oil level plug on opposite side (not in view)
▨ oil drain plug on opposite side (not in view)

8.5 - Gear reducers R 3I – Long model

Dimensions

R 3I 140 ... 360 – Long model

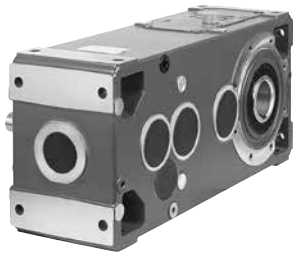

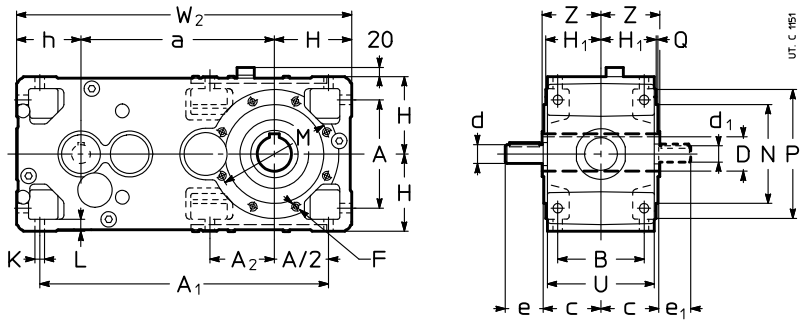

Size	a	A	A_1	A_2	B	c	D Ø H7	d Ø $i_N \leq 63$	e	d Ø $i_N \geq 71$	e	d_1 Ø	e_1	F 1)	H h11	H_1	h h11	K Ø	L	M Ø	N Ø h6	P Ø	Q	U	W_2	Z	lb
140	373	212	560	127	162	107	70	28	60	24	50	24	50	2)	150	103.5	125	18	23	265	230	300	4	201	648	125	273
160	450	252	672	–	201	132	80	32	80	28	60	28	60	M16	180	128.5	150	22	28	265	230	300	4	249	780	136	450
180	470	252	692	170	201	132	90	32	80	28	60	28	60	M16	180	128.5	150	22	28	300	250	350	5	249	800	150	489
200	556	320	831	–	250	162	100	42	110	38	80	38	80	2)	225	158	180	27	34	350	300	400	5	307	961	167	787
225	581	320	856	223	250	162	110	42	110	38	80	38	80	M20	225	158	180	27	34	400	350	450	5	307	986	180	858
250	690	396	1031	–	310	200	125	55	110	48	110	45	110	2)	280	195	225	33	42	500	450	550	5	380	1195	206	1 378
280	720	396	1061	277	310	200	140	55	110	48	110	45	110	M24	280	195	225	33	42	500	450	550	5	380	1225	222	1 504
320, 321	870	510	1305	–	386	245	160	70	140	55	110	55	110	2)	355	241	280	39	52	600	550	660	6	470	1505	254	2 844
360	910	510	1345	358	386	245	180	70	140	55	110	55	110	M30	355	241	280	39	52	600	550	660	6	470	1545	273	3 186

Designs (direction of rotation)

R 3I 140 ... 360 – Long model

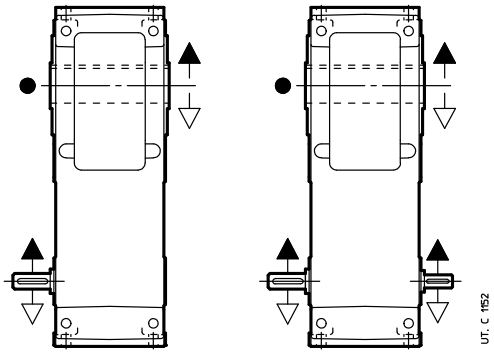

UP4A UP4D

● Position of reference groove (see ch. 6) for radial load verification.
1) Working length of thread 2 · F.
2) For dimension, number and angular position see ch. 6.

Mounting positions

Unless otherwise stated, gear reducers are supplied in mounting position **B3** (see ch. 2).

R 3I 140 ... 360 – Long model

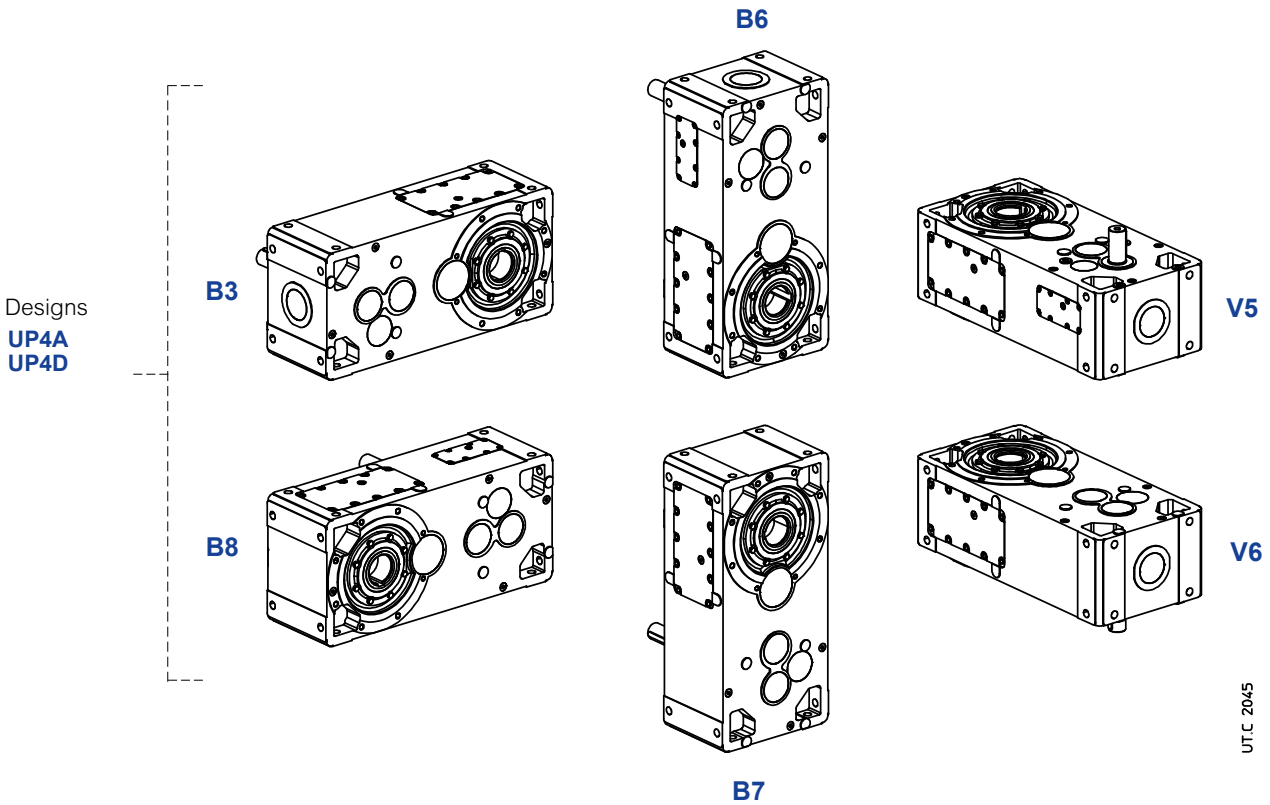

Oil quantity R 3I 140 ... 360 – Long model

Stated oil quantities [gal] are approximate for provisioning. The exact oil quantity the gear reducer is to be filled with is defined by the level plug.

Mounting position	140	160	180	200	225	250	280	320, 321	360
B3	2.3	4.2	4.6	8.7	9	16	17	33	34
B8	3.2	5.8	6.1	11	12	22	23	43	44
B6	4	7.4	7.7	14	15	27	29	53	53
B7	4	7.4	7.7	14	15	27	29	53	53
V5	3.5	6.3	6.6	12	13	24	25	47	48
V6	3.5	6.3	6.6	12	13	24	25	47	48

Lubrication details

R 3I 140 ... 360 – Long model

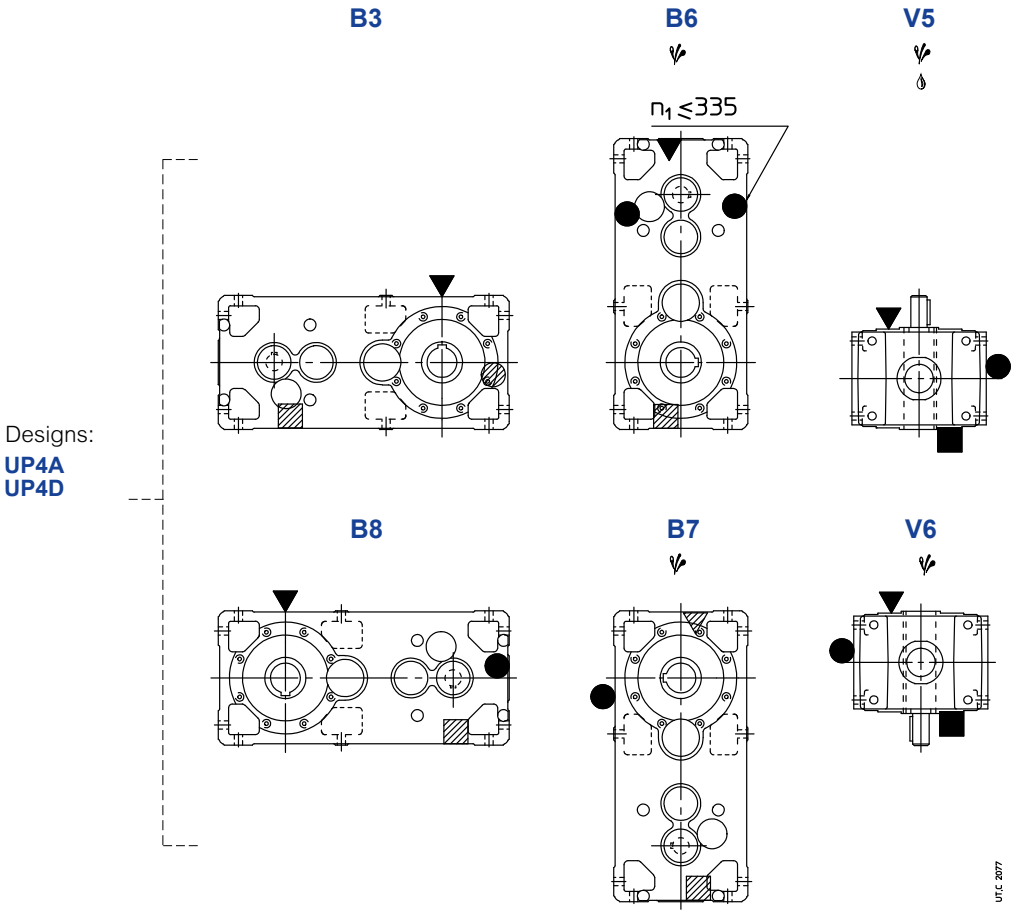

Possible high oil splash: for the corrective factor ft_3 of nominal thermal power Pt_N see ch. 4.

Possible bearing lubrication pump or lubrication device on high speed shaft (see ch. 17 (19)).

▼ oil filler plug
● oil level plug
■ oil drain plug

▽ oil filler plug on opposite side (not in view)
◍ oil level plug on opposite side (not in view)
▨ oil drain plug on opposite side (not in view)

9 – Bevel helical gear reducer selection tables

9 - Bevel helical gear reducer selection tables

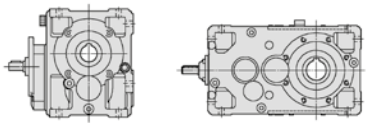

$n_{N2} \cdot L_h$ rpm · h	i_N	50	63	64	80	81	100	125	140	160	180	200	225	250	280	320	321	360	i_N	n_1 rpm	n_{N2} rpm
		Nominal output power P_{N2} [hp] Nominal output torque T_{N2} [lb in] Train of gears / ratio ... / i																			
45 000 000	4	–	–	–	–	–	–	–	–	–	–	33 850 CI/4.1	–	66 150 CI/4	–	115 300 CI/3.9	144 200 CI/3.9	–			
40 000 000	4	–	–	–	–	–	–	–	–	–	–	34 750 CI/4.1	–	67 900 CI/4	–	118 400 CI/3.9	148 000 CI/3.9	–			
35 500 000	5	–	–	–	–	–	–	10 600 CI/5.06	–	20 200 CI/4.89	–	42 250 CI/5.11	–	83 700 CI/5.06	–	144 400 CI/4.89	180 500 CI/4.89	–			
	4	–	–	–	–	–	–	–	–	–	–	35 700 CI/4.1	–	69 800 CI/4	–	121 600 CI/3.9	152 100 CI/3.9	–			
31 500 000	5	–	–	–	–	–	–	10 900 CI/5.06	–	20 750 CI/4.89	–	43 400 CI/5.11	–	85 900 CI/5.06	–	148 200 CI/4.89	185 300 CI/4.89	–			
	4	–	–	–	–	–	–	–	–	–	–	36 650 CI/4.1	–	71 550 CI/4	–	124 700 CI/3.9	155 900 CI/3.9	–			
28 000 000	6.3	820 CI/6.53	1 460 CI/6.57	1 840 CI/6.57	3 150 CI/6.27	3 520 CI/6.27	6 460 CI/6.53	13 800 CI/6.57	–	25 900 CI/6.27	–	54 050 CI/6.53	–	108 700 CI/6.57	–	185 100 CI/6.27	231 400 CI/6.27	–			
	5	–	–	–	–	–	–	11 200 CI/5.06	–	21 300 CI/4.89	–	44 600 CI/5.11	–	88 250 CI/5.06	–	152 300 CI/4.89	190 400 CI/4.89	–			
	4	–	–	–	–	–	–	–	–	–	–	37 650 CI/4.1	–	73 600 CI/4	–	128 300 CI/3.9	160 400 CI/3.9	–			
25 000 000	6.3	840 CI/6.53	1 490 CI/6.57	1 890 CI/6.57	3 230 CI/6.27	3 610 CI/6.27	6 640 CI/6.53	14 150 CI/6.57	–	26 600 CI/6.27	–	55 450 CI/6.53	–	111 600 CI/6.57	–	190 000 CI/6.27	237 500 CI/6.27	–			
	5	–	–	–	–	–	–	11 450 CI/5.06	–	21 850 CI/4.89	–	45 700 CI/5.11	–	90 500 CI/5.06	–	156 200 CI/4.89	195 200 CI/4.89	–			
	4	–	–	–	–	–	–	–	–	–	–	38 900 CI/4.1	–	76 000 CI/4	–	132 400 CI/3.9	165 600 CI/3.9	–			
22 400 000	8	955 CI/7.85	1 770 CI/8	2 240 CI/8	3 880 CI/8.33	4 490 CI/8.33	7 760 CI/7.85	15 700 CI/8	19 250 CI/8.15	31 300 CI/8.27	39 250 CI/8.31	62 500 CI/8.27	75 750 CI/8.14	116 500 CI/8.21	151 700 CI/8.15	196 200 CI/7.83	244 300 CI/7.83	295 400 CI/8			
	6.3	865 CI/6.53	1 540 CI/6.57	1 940 CI/6.57	3 320 CI/6.27	3 710 CI/6.27	6 820 CI/6.53	14 550 CI/6.57	–	27 350 CI/6.27	–	57 000 CI/6.53	–	114 600 CI/6.57	–	195 200 CI/6.27	244 000 CI/6.27	–			
	5	–	–	–	–	–	–	11 800 CI/5.06	–	22 500 CI/4.89	–	47 000 CI/5.11	–	93 100 CI/5.06	–	160 600 CI/4.89	200 800 CI/4.89	–			
	4	–	–	–	–	–	–	–	–	–	–	39 950 CI/4.1	–	78 050 CI/4	–	136 100 CI/3.9	170 100 CI/3.9	–			
20 000 000	9	–	–	–	–	–	–	–	21 250 CI/9	32 050 CI/9.04	44 100 CI/9.33	63 300 CI/8.93	86 850 CI/9.33	128 100 CI/9.04	167 500 CI/9	219 200 CI/8.75	272 900 CI/8.75	331 000 CI/9.2			
	8	980 CI/7.85	1 820 CI/8	2 300 CI/8	3 980 CI/8.33	4 610 CI/8.33	7 970 CI/7.85	16 100 CI/8	19 800 CI/8.15	32 150 CI/8.27	40 300 CI/8.31	64 150 CI/8.27	77 750 CI/8.14	119 600 CI/8.21	155 800 CI/8.15	201 400 CI/7.83	250 800 CI/7.83	303 200 CI/8			

For n_1 lower than 560 rpm see page 195.

9 - Bevel helical gear reducer selection tables

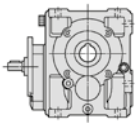

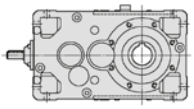

$n_{N2} \cdot L_h$ rpm · h	i_N	Nominal output power P_{N2} [hp] / Nominal output torque T_{N2} [lb in] / Train of gears / ratio ... / i																	i_N	n_1 rpm	n_{N2}
		50	63	64	80	81	100	125	140	160	180	200	225	250	280	320	321	360			
20 000 000	6.3	885 CI/6.53	1 570 CI/6.57	1 990 CI/6.57	3 400 CI/6.27	3 800 CI/6.27	6 990 CI/6.53	14 900 CI/6.57	–	28 050 CI/6.27	–	58 450 CI/6.53	–	117 600 CI/6.57	–	200 200 CI/6.27	250 200 CI/6.27	–			
	5	–	–	–	–	–	–	12 200 CI/5.06	–	23 200 CI/4.89	–	48 550 CI/5.11	–	96 100 CI/5.06	–	165 800 CI/4.89	207 300 CI/4.89	–			
	4	–	–	–	–	–	–	–	–	–	–	41 000 CI/4.1	–	80 150 CI/4	–	139 700 CI/3.9	174 600 CI/3.9	–			
18 000 000	10	915 CI/10.3	1 850 CI/10	2 260 CI/10	3 910 CI/10.4	4 520 CI/10.4	7 940 CI/9.81	15 900 CI/10	20 450 CI/10.2	31 950 CI/10.3	41 700 CI/10.4	63 700 CI/10.3	80 550 CI/10.2	127 200 CI/10	161 400 CI/10.2	226 500 CI/10.2	277 300 CI/10.2	311 900 CI/10			
	9	–	–	–	–	–	–	–	21 850 CI/9	32 900 CI/9.04	45 300 CI/9.33	64 950 CI/8.93	89 150 CI/9.33	131 500 CI/9.04	171 900 CI/9	225 000 CI/8.75	280 200 CI/8.75	339 800 CI/9.2			
	8	1 010 CI/7.85	1 870 CI/8	2 370 CI/8	4 090 CI/8.33	4 740 CI/8.33	8 190 CI/7.85	16 550 CI/8	20 300 CI/8.15	33 000 CI/8.27	41 400 CI/8.31	65 900 CI/8.27	79 900 CI/8.14	122 800 CI/8.21	160 000 CI/8.15	206 900 CI/7.83	257 700 CI/7.83	311 500 CI/8			
	6.3	910 CI/6.53	1 620 CI/6.57	2 050 CI/6.57	3 500 CI/6.27	3 910 CI/6.27	7 190 CI/6.53	15 350 CI/6.57	–	28 800 CI/6.27	–	60 100 CI/6.53	–	120 900 CI/6.57	–	205 900 CI/6.27	257 400 CI/6.27	–			
	5	–	–	–	–	–	–	12 500 CI/5.06	–	23 850 CI/4.89	–	49 850 CI/5.11	–	98 700 CI/5.06	–	170 400 CI/4.89	213 000 CI/4.89	–			
	4	–	–	–	–	–	–	–	–	–	–	42 150 CI/4.1	–	82 350 CI/4	–	143 500 CI/3.9	179 400 CI/3.9	–			
16 000 000	11.2	–	–	–	–	–	–	–	21 950 CI/11.3	29 900 CI/11.4	46 550 CI/11.7	59 050 CI/11.3	92 350 CI/11.7	119 600 CI/11.4	178 100 CI/11.3	206 800 CI/11	258 400 CI/11	337 600 CI/11.5			
	10	940 CI/10.3	1 900 CI/10	2 320 CI/10	4 010 CI/10.4	4 640 CI/10.4	8 150 CI/9.81	16 300 CI/10	21 000 CI/10.2	32 800 CI/10.3	42 800 CI/10.4	65 400 CI/10.3	82 700 CI/10.2	130 600 CI/10	165 600 CI/10.2	232 500 CI/10.2	284 700 CI/10.2	320 200 CI/10			
	9	–	–	–	–	–	–	–	22 450 CI/9	33 800 CI/9.04	46 500 CI/9.33	66 750 CI/8.93	91 600 CI/9.33	135 200 CI/9.04	176 600 CI/9	231 100 CI/8.75	287 800 CI/8.75	349 100 CI/9.2			
	8	1 030 CI/7.85	1 920 CI/8	2 430 CI/8	4 200 CI/8.33	4 860 CI/8.33	8 400 CI/7.85	16 950 CI/8	20 850 CI/8.15	33 850 CI/8.27	42 450 CI/8.31	67 600 CI/8.27	81 950 CI/8.14	126 000 CI/8.21	164 100 CI/8.15	212 200 CI/7.83	264 200 CI/7.83	319 400 CI/8			
	6.3	940 CI/6.53	1 670 CI/6.57	2 120 CI/6.57	3 610 CI/6.27	4 040 CI/6.27	7 420 CI/6.53	15 850 CI/6.57	–	29 750 CI/6.27	–	62 050 CI/6.53	–	124 800 CI/6.57	–	212 600 CI/6.27	265 700 CI/6.27	–			
	5	–	–	–	–	–	–	12 850 CI/5.06	–	24 500 CI/4.89	–	51 200 CI/5.11	–	101 300 CI/5.06	–	174 900 CI/4.89	218 600 CI/4.89	–			
	4	–	–	–	–	–	–	–	–	–	–	42 700 CI/4.1	–	83 450 CI/4	–	145 500 CI/3.9	181 800 CI/3.9	–			
14 000 000	12.5	970 CI/12.4	1 770 CI/12.6	2 240 CI/12.6	3 930 CI/13.1	4 550 CI/13.1	7 760 CI/12.4	16 100 CI/12.6	19 250 CI/12.9	34 200 CI/13	39 250 CI/13.1	68 350 CI/13	75 750 CI/12.8	132 300 CI/12.6	151 700 CI/12.9	205 200 CI/12.8	251 300 CI/12.8	295 400 CI/12.6			
	11.2	–	–	–	–	–	–	–	22 500 CI/11.3	30 700 CI/11.4	47 800 CI/11.7	60 650 CI/11.3	94 800 CI/11.7	122 800 CI/11.4	182 800 CI/11.3	212 200 CI/11	265 300 CI/11	346 600 CI/11.5			

For n_1 lower than 560 rpm see page 195.

9 - Bevel helical gear reducer selection tables

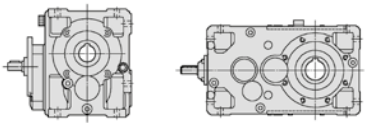

$n_{N2} \cdot L_h$ rpm · h	i_N	50	63	64	80	81	100	125	140	160	180	200	225	250	280	320	321	360	i_N	n_1 rpm	n_{N2}
		Nominal output power P_{N2} [hp]																			
		Nominal output torque T_{N2} [lb in]																			
		Train of gears / ratio ... / i																			
14 000 000	10	965 CI/10.3	1 950 CI/10	2 380 CI/10	4 120 CI/10.4	4 770 CI/10.4	8 370 CI/9.81	16 750 CI/10	21 600 CI/10.2	33 700 CI/10.3	44 000 CI/10.4	67 200 CI/10.3	85 000 CI/10.2	134 200 CI/10	170 200 CI/10.2	238 900 CI/10.2	292 500 CI/10.2	329 000 CI/10			
	9	–	–	–	–	–	–	–	23 000 CI/9	34 650 CI/9.04	47 700 CI/9.33	68 450 CI/8.93	93 900 CI/9.33	138 600 CI/9.04	181 100 CI/9	237 000 CI/8.75	295 200 CI/8.75	358 000 CI/9.2			
	8	1 060 CI/7.85	1 970 CI/8	2 500 CI/8	4 310 CI/8.33	5 000 CI/8.33	8 640 CI/7.85	17 450 CI/8	21 450 CI/8.15	34 800 CI/8.27	43 650 CI/8.31	69 500 CI/8.27	84 250 CI/8.14	129 500 CI/8.21	168 800 CI/8.15	218 200 CI/7.83	271 800 CI/7.83	328 600 CI/8			
	6.3	970 CI/6.53	1 720 CI/6.57	2 180 CI/6.57	3 710 CI/6.27	4 150 CI/6.27	7 630 CI/6.53	16 250 CI/6.57	–	30 550 CI/6.27	–	63 750 CI/6.53	–	128 200 CI/6.57	–	218 400 CI/6.27	273 000 CI/6.27	–			
	5	–	–	–	–	–	–	13 200 CI/5.06	–	25 150 CI/4.89	–	52 600 CI/5.11	–	104 100 CI/5.06	–	179 700 CI/4.89	224 600 CI/4.89	–			
	4	–	–	–	–	–	–	–	–	–	–	43 250 CI/4.1	–	84 500 CI/4	–	147 300 CI/3.9	184 100 CI/3.9	–			
12 500 000	14	–	–	–	–	–	–	–	21 250 CI/14.2	33 250 CI/14.2	44 100 CI/14.7	67 950 CI/14.2	86 850 CI/14.7	135 900 CI/14.1	167 500 CI/14.2	217 900 CI/14.2	258 500 CI/14.2	339 700 CI/14.5			
	12.5	995 CI/12.4	1 820 CI/12.6	2 300 CI/12.6	4 040 CI/13.1	4 670 CI/13.1	7 970 CI/12.4	16 500 CI/12.6	19 800 CI/12.9	35 100 CI/13	40 300 CI/13.1	70 200 CI/13	77 750 CI/12.8	135 800 CI/12.6	155 800 CI/12.9	210 700 CI/12.8	257 900 CI/12.8	303 200 CI/12.6			
	11.2	–	–	–	–	–	–	–	23 150 CI/11.3	31 550 CI/11.4	49 100 CI/11.7	62 300 CI/11.3	97 400 CI/11.7	126 100 CI/11.4	187 800 CI/11.3	218 100 CI/11	272 600 CI/11	356 100 CI/11.5			
	10	990 CI/10.3	2 000 CI/10	2 440 CI/10	4 220 CI/10.4	4 890 CI/10.4	8 590 CI/9.81	17 150 CI/10	22 150 CI/10.2	34 550 CI/10.3	45 100 CI/10.4	68 900 CI/10.3	87 150 CI/10.2	137 600 CI/10	174 500 CI/10.2	244 900 CI/10.2	299 900 CI/10.2	337 300 CI/10			
	9	–	–	–	–	–	–	–	23 650 CI/9	35 650 CI/9.04	49 050 CI/9.33	70 400 CI/8.93	96 600 CI/9.33	142 500 CI/9.04	186 300 CI/9	243 800 CI/8.75	303 600 CI/8.75	368 200 CI/9.2			
	8	1 100 CI/7.85	2 040 CI/8	2 580 CI/8	4 450 CI/8.33	5 160 CI/8.33	8 920 CI/7.85	18 000 CI/8	22 150 CI/8.15	35 950 CI/8.27	45 100 CI/8.31	71 750 CI/8.27	87 000 CI/8.14	133 700 CI/8.21	174 200 CI/8.15	225 300 CI/7.83	280 600 CI/7.83	339 200 CI/8			
	6.3	995 CI/6.53	1 760 CI/6.57	2 230 CI/6.57	3 810 CI/6.27	4 260 CI/6.27	7 830 CI/6.53	16 700 CI/6.57	–	31 400 CI/6.27	–	65 450 CI/6.53	–	131 600 CI/6.57	–	224 200 CI/6.27	280 200 CI/6.27	–			
	5	–	–	–	–	–	–	13 400 CI/5.06	–	25 500 CI/4.89	–	53 300 CI/5.11	–	105 500 CI/5.06	–	182 100 CI/4.89	227 700 CI/4.89	–			
	4	–	–	–	–	–	–	–	–	–	–	43 850 CI/4.1	–	85 700 CI/4	–	149 400 CI/3.9	186 700 CI/3.9	–			
11 200 000	16	850 CI/15.2	1 600 CI/15.8	1 970 CI/15.8	3 400 CI/16.4	3 930 CI/16.4	7 010 CI/15.2	14 000 CI/15.8	20 350 CI/15.8	30 500 CI/15.5	43 100 CI/16	62 650 CI/15.5	85 650 CI/16	125 300 CI/16	171 600 CI/15.8	204 200 CI/16.3	254 600 CI/16.3	326 800 CI/16			
	14	–	–	–	–	–	–	–	21 850 CI/14.2	34 100 CI/14.2	45 300 CI/14.7	69 750 CI/14.2	89 150 CI/14.7	139 500 CI/14.1	171 900 CI/14.2	223 600 CI/14.2	265 400 CI/14.2	348 700 CI/14.5			
	12.5	1 020 CI/12.4	1 870 CI/12.6	2 370 CI/12.6	4 150 CI/13.1	4 800 CI/13.1	8 190 CI/12.4	16 950 CI/12.6	20 300 CI/12.9	36 050 CI/13	41 400 CI/13.1	72 100 CI/13	79 900 CI/12.8	139 600 CI/12.6	160 000 CI/12.9	216 500 CI/12.8	265 000 CI/12.8	311 500 CI/12.6			

For n_1 lower than 560 rpm see page 195.

9 - Bevel helical gear reducer selection tables

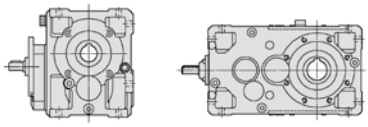

$n_{N2} \cdot L_h$ rpm · h	i_N	50	63	64	80	81	100	125	140	160	180	200	225	250	280	320	321	360	i_N	n_1 rpm	n_{N2}
		Nominal output power P_{N2} [hp] Nominal output torque T_{N2} [lb in] Train of gears / ratio ... / i																			
11 200 000	11.2	–	–	–	–	–	–	–	23 700 CI/11.3	32 350 CI/11.4	50 350 CI/11.7	63 900 CI/11.3	99 900 CI/11.7	129 400 CI/11.4	192 600 CI/11.3	223 600 CI/11	279 500 CI/11	365 100 CI/11.5			
	10	1 020 CI/10.3	2 060 CI/10	2 510 CI/10	4 340 CI/10.4	5 030 CI/10.4	8 830 CI/9.81	17 650 CI/10	22 750 CI/10.2	35 500 CI/10.3	46 400 CI/10.4	70 850 CI/10.3	89 600 CI/10.2	141 500 CI/10	179 500 CI/10.2	251 900 CI/10.2	308 500 CI/10.2	346 900 CI/10			
	9	–	–	–	–	–	–	–	24 400 CI/9	36 800 CI/9.04	50 650 CI/9.33	72 700 CI/8.93	99 700 CI/9.33	147 200 CI/9.04	192 300 CI/9	251 700 CI/8.75	313 400 CI/8.75	380 100 CI/9.2			
	8	1 130 CI/7.85	2 090 CI/8	2 650 CI/8	4 580 CI/8.33	5 300 CI/8.33	9 160 CI/7.85	18 500 CI/8	22 750 CI/8.15	36 950 CI/8.27	46 300 CI/8.31	73 750 CI/8.27	89 400 CI/8.14	137 400 CI/8.21	179 000 CI/8.15	231 500 CI/7.83	288 300 CI/7.83	348 500 CI/8			
	6.3	1 020 CI/6.53	1 810 CI/6.57	2 290 CI/6.57	3 920 CI/6.27	4 380 CI/6.27	8 040 CI/6.53	17 150 CI/6.57	–	32 250 CI/6.27	–	67 250 CI/6.53	–	135 300 CI/6.57	–	230 300 CI/6.27	287 900 CI/6.27	–			
	5	–	–	–	–	–	–	13 550 CI/5.06	–	25 800 CI/4.89	–	54 000 CI/5.11	–	106 900 CI/5.06	–	184 400 CI/4.89	230 500 CI/4.89	–			
	4	–	–	–	–	–	–	–	–	–	–	44 500 CI/4.1	–	86 950 CI/4	–	151 500 CI/3.9	189 400 CI/3.9	–			
10 000 000	18	–	–	–	–	–	–	–	20 600 CI/18	32 450 CI/18	42 750 CI/18.7	64 600 CI/18	84 650 CI/18.7	128 500 CI/17.9	163 500 CI/18	197 600 CI/18	249 600 CI/18	331 500 CI/18.4			
	16	875 CI/15.2	1 640 CI/15.8	2 020 CI/15.8	3 490 CI/16.4	4 040 CI/16.4	7 200 CI/15.2	14 350 CI/15.8	20 900 CI/15.8	31 300 CI/15.5	44 250 CI/16	64 300 CI/15.5	87 900 CI/16	128 600 CI/16	176 100 CI/15.8	209 600 CI/16.3	261 400 CI/16.3	335 500 CI/16			
	14	–	–	–	–	–	–	–	22 450 CI/14.2	35 050 CI/14.2	46 500 CI/14.7	71 650 CI/14.2	91 600 CI/14.7	143 300 CI/14.1	176 600 CI/14.2	229 800 CI/14.2	272 600 CI/14.2	358 200 CI/14.5			
	12.5	1 050 CI/12.4	1 920 CI/12.6	2 430 CI/12.6	4 250 CI/13.1	4 920 CI/13.1	8 400 CI/12.4	17 400 CI/12.6	20 850 CI/12.9	36 950 CI/13	42 450 CI/13.1	73 950 CI/13	81 950 CI/12.8	143 100 CI/12.6	164 100 CI/12.9	222 000 CI/12.8	271 800 CI/12.8	319 400 CI/12.6			
	11.2	–	–	–	–	–	–	–	24 400 CI/11.3	33 250 CI/11.4	51 800 CI/11.7	65 700 CI/11.3	102 700 CI/11.7	133 000 CI/11.4	198 100 CI/11.3	230 000 CI/11	287 500 CI/11	375 500 CI/11.5			
	10	1 050 CI/10.3	2 120 CI/10	2 590 CI/10	4 480 CI/10.4	5 190 CI/10.4	9 120 CI/9.81	18 250 CI/10	23 500 CI/10.2	36 650 CI/10.3	47 900 CI/10.4	73 150 CI/10.3	92 500 CI/10.2	146 100 CI/10	185 300 CI/10.2	260 100 CI/10.2	318 500 CI/10.2	358 200 CI/10			
	9	–	–	–	–	–	–	–	25 100 CI/9	37 800 CI/9.04	52 050 CI/9.33	74 650 CI/8.93	102 500 CI/9.33	151 200 CI/9.04	197 600 CI/9	258 600 CI/8.75	322 000 CI/8.75	390 500 CI/9.2			
	8	1 160 CI/7.85	2 150 CI/8	2 720 CI/8	4 700 CI/8.33	5 440 CI/8.33	9 400 CI/7.85	19 000 CI/8	23 350 CI/8.15	37 900 CI/8.27	47 550 CI/8.31	75 700 CI/8.27	91 750 CI/8.14	141 000 CI/8.21	183 800 CI/8.15	237 600 CI/7.83	295 900 CI/7.83	357 700 CI/8			
	6.3	1 030 CI/6.53	1 840 CI/6.57	2 330 CI/6.57	3 970 CI/6.27	4 440 CI/6.27	8 150 CI/6.53	17 400 CI/6.57	–	32 700 CI/6.27	–	68 150 CI/6.53	–	137 100 CI/6.57	–	233 500 CI/6.27	291 800 CI/6.27	–			
	5	–	–	–	–	–	–	13 750 CI/5.06	–	26 200 CI/4.89	–	54 750 CI/5.11	–	108 400 CI/5.06	–	187 000 CI/4.89	233 800 CI/4.89	–			
	4	–	–	–	–	–	–	–	–	–	–	45 150 CI/4.1	–	88 200 CI/4	–	153 700 CI/3.9	192 100 CI/3.9	–			

For n_1 lower than 560 rpm see page 195.

9 - Bevel helical gear reducer selection tables

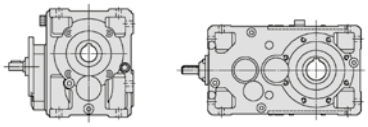

$n_{N2} \cdot L_h$ rpm · h	i_N	50	63	64	80	81	100	125	140	160	180	200	225	250	280	320	321	360	i_N	n_1 rpm	n_{N2}
		Nominal output power P_{N2} [hp] / Nominal output torque T_{N2} [lb in] / Train of gears / ratio … / i																			
9 000 000	20	–	–	–	–	–	–	–	22 150 C2I/20.4	37 650 C2I/20.6	49 450 C2I/21.4	76 350 C2I/20.5	92 150 C2I/19.9	153 500 C2I/21.5	189 800 C2I/20.8	268 800 C2I/20.6	333 600 C2I/20.6	389 300 C2I/21.4			
	20	855 CI/19.3	1 610 CI/20	1 980 CI/20	3 430 CI/20.8	3 960 CI/20.8	7 100 CI/19.3	14 150 CI/20	20 400 CI/20	30 850 CI/19.7	40 750 CI/20.3	63 450 CI/19.7	81 500 CI/20.3	126 900 CI/20.3	161 000 CI/20	208 100 CI/19.7	248 500 CI/19.7	317 600 CI/20.3			
	18	–	–	–	–	–	–	–	21 150 CI/18	33 300 CI/18	43 850 CI/18.7	66 300 CI/18	86 900 CI/18.7	131 900 CI/17.9	167 800 CI/18	202 900 CI/18	256 200 CI/18	340 300 CI/18.4			
	16	895 CI/15.2	1 690 CI/15.8	2 070 CI/15.8	3 590 CI/16.4	4 150 CI/16.4	7 390 CI/15.2	14 750 CI/15.8	21 450 CI/15.8	32 150 CI/15.5	45 450 CI/16	66 100 CI/15.5	90 350 CI/16	132 200 CI/16	180 900 CI/15.8	215 400 CI/16.3	268 600 CI/16.3	344 700 CI/16			
	14	–	–	–	–	–	–	–	23 000 CI/14.2	35 950 CI/14.2	47 700 CI/14.7	73 500 CI/14.2	93 900 CI/14.7	147 000 CI/14.1	181 100 CI/14.2	235 600 CI/14.2	279 600 CI/14.2	367 400 CI/14.5			
	12.5	1 080 CI/12.4	1 970 CI/12.6	2 500 CI/12.6	4 370 CI/13.1	5 060 CI/13.1	8 640 CI/12.4	17 900 CI/12.6	21 450 CI/12.9	38 000 CI/13	43 650 CI/13.1	76 050 CI/13	84 250 CI/12.8	147 200 CI/12.6	168 800 CI/12.9	228 300 CI/12.8	279 500 CI/12.8	328 600 CI/12.6			
	11.2	–	–	–	–	–	–	–	25 200 CI/11.3	34 350 CI/11.4	53 450 CI/11.7	67 850 CI/11.3	106 100 CI/11.7	137 300 CI/11.4	204 500 CI/11.3	237 400 CI/11	296 800 CI/11	387 700 CI/11.5			
	10	1 080 CI/10.3	2 180 CI/10	2 670 CI/10	4 610 CI/10.4	5 330 CI/10.4	9 370 CI/9.81	18 750 CI/10	24 150 CI/10.2	37 650 CI/10.3	49 200 CI/10.4	75 150 CI/10.3	95 050 CI/10.2	150 100 CI/10	190 400 CI/10.2	267 200 CI/10.2	327 200 CI/10.2	368 000 CI/10			
	9	–	–	–	–	–	–	–	25 750 CI/9	38 800 CI/9.04	53 400 CI/9.33	76 650 CI/8.93	105 200 CI/9.33	155 200 CI/9.04	202 800 CI/9	265 400 CI/8.75	330 500 CI/8.75	400 900 CI/9.2			
	8	1 190 CI/7.85	2 210 CI/8	2 790 CI/8	4 830 CI/8.33	5 590 CI/8.33	9 660 CI/7.85	19 500 CI/8	23 950 CI/8.15	38 950 CI/8.27	48 850 CI/8.31	77 750 CI/8.27	94 250 CI/8.14	144 900 CI/8.21	188 800 CI/8.15	244 100 CI/7.83	304 000 CI/7.83	367 500 CI/8			
	6.3	1 050 CI/6.53	1 860 CI/6.57	2 360 CI/6.57	4 020 CI/6.27	4 490 CI/6.27	8 260 CI/6.53	17 600 CI/6.57	–	33 100 CI/6.27	–	69 000 CI/6.53	–	138 800 CI/6.57	–	236 400 CI/6.27	295 500 CI/6.27	–			
	5	–	–	–	–	–	–	13 950 CI/5.06	–	26 550 CI/4.89	–	55 550 CI/5.11	–	109 900 CI/5.06	–	189 700 CI/4.89	237 200 CI/4.89	–			
	4	–	–	–	–	–	–	–	–	–	–	45 800 CI/4.1	–	89 450 CI/4	–	155 900 CI/3.9	194 900 CI/3.9	–			
8 000 000	22.4	–	–	–	–	–	–	–	25 350 C2I/23.8	37 650 C2I/23.8	53 750 C2I/23.7	76 350 C2I/22.4	106 400 C2I/23	153 500 C2I/23.6	211 900 C2I/23.8	268 800 C2I/23	334 600 C2I/23	424 000 C2I/23.7			
	20	–	–	–	–	–	–	–	22 750 C2I/20.4	38 650 C2I/20.6	50 750 C2I/21.4	78 350 C2I/20.5	94 600 C2I/19.9	157 600 C2I/21.5	194 800 C2I/20.8	275 900 C2I/20.6	342 500 C2I/20.6	399 600 C2I/21.4			
	20	880 CI/19.3	1 650 CI/20	2 030 CI/20	3 520 CI/20.8	4 090 CI/20.8	7 290 CI/19.3	14 550 CI/20	20 900 CI/20	31 700 CI/19.7	41 850 CI/20.3	65 150 CI/19.7	83 650 CI/20.3	130 300 CI/20.3	165 200 CI/20	213 600 CI/19.7	255 100 CI/19.7	326 000 CI/20.3			
	18	–	–	–	–	–	–	–	21 750 CI/18	34 200 CI/18	45 050 CI/18.7	68 150 CI/18	89 250 CI/18.7	135 500 CI/17.9	172 400 CI/18	208 500 CI/18	263 200 CI/18	349 600 CI/18.4			
	16	920 CI/15.2	1 730 CI/15.8	2 130 CI/15.8	3 680 CI/16.4	4 270 CI/16.4	7 580 CI/15.2	15 100 CI/15.8	22 000 CI/15.8	32 950 CI/15.5	46 600 CI/16	67 750 CI/15.5	92 650 CI/16	135 500 CI/16	185 500 CI/15.8	220 800 CI/16.3	275 400 CI/16.3	353 500 CI/16			

For n_1 lower than 560 rpm see page 195.

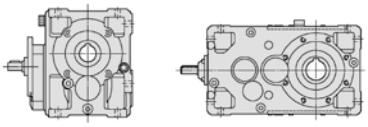

$n_{N2} \cdot L_h$ rpm · h	i_N	50	63	64	80	81	100	125	140	160	180	200	225	250	280	320	321	360	i_N	n_1 rpm	n_{N2}
		Nominal output power P_{N2} [hp]																			
		Nominal output torque T_{N2} [lb in]																			
		Train of gears / ratio ... / i																			
8 000 000	14	–	–	–	–	–	–	–	23 650 CI/14.2	36 950 CI/14.2	49 050 CI/14.7	75 600 CI/14.2	96 600 CI/14.7	151 200 CI/14.1	186 300 CI/14.2	242 300 CI/14.2	287 600 CI/14.2	377 800 CI/14.5			
	12.5	1 110 CI/12.4	2 040 CI/12.6	2 580 CI/12.6	4 520 CI/13.1	5 230 CI/13.1	8 920 CI/12.4	18 450 CI/12.6	22 150 CI/12.9	39 250 CI/13	45 100 CI/13.1	78 500 CI/13	87 000 CI/12.8	152 000 CI/12.6	174 200 CI/12.9	235 700 CI/12.8	288 600 CI/12.8	339 200 CI/12.6			
	11.2	–	–	–	–	–	–	–	25 850 CI/11.3	35 300 CI/11.4	54 950 CI/11.7	69 700 CI/11.3	109 000 CI/11.7	141 100 CI/11.4	210 100 CI/11.3	243 900 CI/11	304 900 CI/11	398 300 CI/11.5			
	10	1 110 CI/10.3	2 240 CI/10	2 740 CI/10	4 730 CI/10.4	5 480 CI/10.4	9 610 CI/9.81	19 250 CI/10	24 800 CI/10.2	38 650 CI/10.3	50 500 CI/10.4	77 150 CI/10.3	97 600 CI/10.2	154 100 CI/10	195 400 CI/10.2	274 300 CI/10.2	335 900 CI/10.2	377 800 CI/10			
	9	–	–	–	–	–	–	–	26 450 CI/9	39 850 CI/9.04	54 900 CI/9.33	78 750 CI/8.93	108 100 CI/9.33	159 500 CI/9.04	208 400 CI/9	272 700 CI/8.75	339 600 CI/8.75	411 900 CI/9.2			
	8	1 200 CI/7.85	2 240 CI/8	2 830 CI/8	4 890 CI/8.33	5 670 CI/8.33	9 790 CI/7.85	19 800 CI/8	24 300 CI/8.15	39 500 CI/8.27	49 500 CI/8.31	78 850 CI/8.27	95 550 CI/8.14	146 900 CI/8.21	191 400 CI/8.15	247 500 CI/7.83	308 200 CI/7.83	372 500 CI/8			
	6.3	1 060 CI/6.53	1 890 CI/6.57	2 390 CI/6.57	4 080 CI/6.27	4 560 CI/6.27	8 370 CI/6.53	17 850 CI/6.57	–	33 550 CI/6.27	–	70 000 CI/6.53	–	140 800 CI/6.57	–	239 800 CI/6.27	299 700 CI/6.27	–			
	5	–	–	–	–	–	–	14 150 CI/5.06	–	26 950 CI/4.89	–	56 350 CI/5.11	–	111 500 CI/5.06	–	192 500 CI/4.89	240 600 CI/4.89	–			
	4	–	–	–	–	–	–	–	–	–	–	46 400 CI/4.1	–	90 650 CI/4	–	158 000 CI/3.9	197 500 CI/3.9	–			
7 100 000	25	–	–	–	–	–	–	–	24 000 C2I/24.5	38 000 C2I/25.1	49 950 C2I/26	77 150 C2I/27	106 700 C2I/26.3	154 900 C2I/27.2	214 000 C2I/26.4	271 300 C2I/25.1	337 600 C2I/25.1	428 000 C2I/26			
	25	860 CI/24.1	1 700 CI/25	2 130 CI/25	3 450 CI/26	3 980 CI/26	6 550 CI/24.1	14 300 CI/25	–	28 350 CI/24.6	–	56 700 CI/24.6	–	116 100 CI/25.4	–	–	–	–			
	22.4	–	–	–	–	–	–	–	26 050 C2I/23.8	38 650 C2I/23.8	55 200 C2I/23.7	78 350 C2I/22.4	109 200 C2I/23	157 600 C2I/23.6	217 600 C2I/23.8	275 900 C2I/23	343 500 C2I/23	435 300 C2I/23.7			
	20	–	–	–	–	–	–	–	23 350 C2I/20.4	39 700 C2I/20.6	52 150 C2I/21.4	80 500 C2I/20.5	97 200 C2I/19.9	161 900 C2I/21.5	200 200 C2I/20.8	283 500 C2I/20.6	351 900 C2I/20.6	410 600 C2I/21.4			
	20	905 CI/19.3	1 700 CI/20	2 090 CI/20	3 620 CI/20.8	4 230 CI/20.8	7 490 CI/19.3	14 950 CI/20	21 500 CI/20	32 550 CI/19.7	42 950 CI/20.3	66 950 CI/19.7	85 950 CI/20.3	133 900 CI/20.3	169 800 CI/20	219 500 CI/19.7	262 100 CI/19.7	334 900 CI/20.3			
	18	–	–	–	–	–	–	–	22 300 CI/18	35 100 CI/18	46 200 CI/18.7	69 850 CI/18	91 550 CI/18.7	139 000 CI/17.9	176 800 CI/18	213 800 CI/18	269 900 CI/18	358 500 CI/18.4			
	16	945 CI/15.2	1 780 CI/15.8	2 190 CI/15.8	3 790 CI/16.4	4 400 CI/16.4	7 800 CI/15.2	15 550 CI/15.8	22 600 CI/15.8	33 900 CI/15.5	47 950 CI/16	69 700 CI/15.5	95 250 CI/16	139 400 CI/16	190 800 CI/15.8	227 100 CI/16.3	283 300 CI/16.3	363 600 CI/16			
	14	–	–	–	–	–	–	–	24 400 CI/14.2	38 150 CI/14.2	50 650 CI/14.7	78 050 CI/14.2	99 700 CI/14.7	156 100 CI/14.1	192 300 CI/14.2	250 200 CI/14.2	296 900 CI/14.2	390 100 CI/14.5			
	12.5	1 140 CI/12.4	2 090 CI/12.6	2 650 CI/12.6	4 640 CI/13.1	5 370 CI/13.1	9 160 CI/12.4	18 950 CI/12.6	22 750 CI/12.9	40 350 CI/13	46 300 CI/13.1	80 650 CI/13	89 400 CI/12.8	156 100 CI/12.6	179 000 CI/12.9	242 100 CI/12.8	296 500 CI/12.8	348 500 CI/12.6			

For n_1 lower than 560 rpm see page 195.

9 - Bevel helical gear reducer selection tables

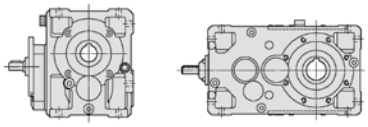

$n_{N2} \cdot L_h$ rpm · h	i_N	50	63	64	80	81	100	125	140	160	180	200	225	250	280	320	321	360	i_N	n_1 rpm	n_{N2}
		Nominal output power P_{N2} [hp]																			
		Nominal output torque T_{N2} [lb in]																			
		Train of gears / ratio ... / i																			
7 100 000	11.2	–	–	–	–	–	–	–	26 550 CI/11.3	36 200 CI/11.4	56 400 CI/11.7	71 550 CI/11.3	111 800 CI/11.7	144 900 CI/11.4	215 700 CI/11.3	250 400 CI/11	313 000 CI/11	408 900 CI/11.5			
	10	1 140 CI/10.3	2 300 CI/10	2 810 CI/10	4 860 CI/10.4	5 630 CI/10.4	9 880 CI/9.81	19 750 CI/10	25 450 CI/10.2	39 750 CI/10.3	51 900 CI/10.4	79 250 CI/10.3	100 300 CI/10.2	158 300 CI/10	200 800 CI/10.2	281 800 CI/10.2	345 100 CI/10.2	388 100 CI/10			
	9	–	–	–	–	–	–	–	26 800 CI/9	40 400 CI/9.04	55 650 CI/9.33	79 850 CI/8.93	109 500 CI/9.33	161 600 CI/9.04	211 200 CI/9	276 400 CI/8.75	344 200 CI/8.75	417 500 CI/9.2			
	8	1 220 CI/7.85	2 260 CI/8	2 870 CI/8	4 950 CI/8.33	5 740 CI/8.33	9 920 CI/7.85	20 050 CI/8	24 600 CI/8.15	40 000 CI/8.27	50 150 CI/8.31	79 850 CI/8.27	96 750 CI/8.14	148 700 CI/8.21	193 800 CI/8.15	250 600 CI/7.83	312 100 CI/7.83	377 300 CI/8			
	6.3	1 080 CI/6.53	1 910 CI/6.57	2 420 CI/6.57	4 130 CI/6.27	4 620 CI/6.27	8 490 CI/6.53	18 100 CI/6.57	–	34 050 CI/6.27	–	71 000 CI/6.53	–	142 800 CI/6.57	–	243 200 CI/6.27	304 000 CI/6.27	–			
								126		248		–		–		–	–		5	2800	**560**
	5	–	–	–	–	–	–	14 350 CI/5.06	–	27 350 CI/4.89▲	–	57 150 CI/5.11	–	113 100 CI/5.06	–	195 200 CI/4.89	244 000 CI/4.89	–			
												408		–		–	–		4	2240	
	4	–	–	–	–	–	–	–	–	–	–	47 000 CI/4.1▲	–	91 850 CI/4	–	160 100 CI/3.9	200 100 CI/3.9	–			
6 300 000	28	–	–	–	–	–	–	–	25 600 C2I/28.6	39 200 C2I/28.9	54 250 C2I/28.8	77 150 C2I/29.5	108 500 C2I/30.3	156 500 C2I/29.9	214 000 C2I/30.1	271 300 C2I/28	337 600 C2I/28	428 000 C2I/28.8			
	25	–	–	–	–	–	–	–	24 650 C2I/24.5	39 000 C2I/25.1	51 250 C2I/26	79 200 C2I/27	109 500 C2I/26.3	159 000 C2I/27.2	219 700 C2I/26.4	278 500 C2I/25.1	346 500 C2I/25.1	439 300 C2I/26			
	25	885 CI/24.1	1 760 CI/25	2 200 CI/25	3 540 CI/26	4 120 CI/26	6 720 CI/24.1	14 700 CI/25	–	29 100 CI/24.6	–	58 200 CI/24.6	–	119 100 CI/25.4	–	–	–	–			
	22.4	–	–	–	–	–	–	–	26 750 C2I/23.8	39 700 C2I/23.8	56 700 C2I/23.7	80 500 C2I/22.4	112 200 C2I/23	161 900 C2I/23.6	223 500 C2I/23.8	283 500 C2I/23	352 900 C2I/23	447 200 C2I/23.7			
	20	–	–	–	–	–	–	–	23 950 C2I/20.4	40 700 C2I/20.6	53 450 C2I/21.4	82 550 C2I/20.5	99 650 C2I/19.9	166 100 C2I/21.5	205 300 C2I/20.8	290 700 C2I/20.6	360 800 C2I/20.6	421 000 C2I/21.4			
	20	925 CI/19.3	1 740 CI/20	2 140 CI/20	3 720 CI/20.8	4 380 CI/20.8	7 680 CI/19.3	15 300 CI/20	22 050 CI/20	33 400 CI/19.7	44 050 CI/20.3	68 650 CI/19.7	88 150 CI/20.3	137 300 CI/20.3	174 100 CI/20	225 100 CI/19.7	268 800 CI/19.7	343 500 CI/20.3			
	18	–	–	–	–	–	–	–	22 900 CI/18	36 050 CI/18	47 550 CI/18.7	71 850 CI/18	94 150 CI/18.7	142 900 CI/17.9	181 900 CI/18	219 900 CI/18	277 600 CI/18	368 800 CI/18.4			
	16	975 CI/15.2	1 840 CI/15.8	2 260 CI/15.8	3 910 CI/16.4	4 560 CI/16.4	8 050 CI/15.2	16 050 CI/15.8	23 350 CI/15.8	35 000 CI/15.5	49 500 CI/16	71 950 CI/15.5	98 350 CI/16	143 900 CI/16	197 000 CI/15.8	234 500 CI/16.3	292 400 CI/16.3	375 300 CI/16			
	14	–	–	–	–	–	–	–	25 100 CI/14.2	39 200 CI/14.2	52 050 CI/14.7	80 150 CI/14.2	102 500 CI/14.7	160 300 CI/14.1	197 600 CI/14.2	257 000 CI/14.2	305 000 CI/14.2	400 800 CI/14.5			
	12.5	1 170 CI/12.4	2 150 CI/12.6	2 720 CI/12.6	4 760 CI/13.1	5 510 CI/13.1	9 400 CI/12.4	19 500 CI/12.6	23 350 CI/12.9	41 400 CI/13	47 550 CI/13.1	82 800 CI/13	91 750 CI/12.8	160 300 CI/12.6	183 800 CI/12.9	248 600 CI/12.8	304 300 CI/12.8	357 700 CI/12.6			
	11.2	–	–	–	–	–	–	–	27 300 CI/11.3	37 200 CI/11.4	57 950 CI/11.7	73 500 CI/11.3	114 900 CI/11.7	148 800 CI/11.4	221 600 CI/11.3	257 300 CI/11	321 600 CI/11	420 100 CI/11.5			

For n_1 lower than 560 rpm see page 195.
▲ Possible forced lubrication with heat exchanger: consult us.

9 - Bevel helical gear reducer selection tables

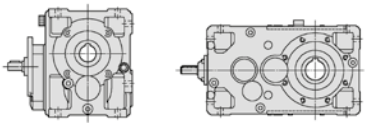

$n_{N2} \cdot L_h$ rpm · h	i_N	50	63	64	80	81	100	125	140	160	180	200	225	250	280	320	321	360	i_N	n_1 rpm	n_{N2}
		Nominal output power P_{N2} [hp] Nominal output torque T_{N2} [lb in] Train of gears / ratio ... / i																			
6 300 000	10	1 160 CI/10.3	2 330 CI/10	2 850 CI/10	4 930 CI/10.4	5 700 CI/10.4	10 000 CI/9.81	20 050 CI/10	25 800 CI/10.2	40 250 CI/10.3	52 600 CI/10.4	80 350 CI/10.3	101 600 CI/10.2	160 400 CI/10	203 500 CI/10.2	285 700 CI/10.2	349 800 CI/10.2	393 400 CI/10			
	9	–	–	–	–	–	–	–	27 150 CI/9	40 900 CI/9.04	56 350 CI/9.33	80 850 CI/8.93	110 900 CI/9.33	163 700 CI/9.04	213 900 CI/9	279 900 CI/8.75	348 600 CI/8.75	422 800 CI/9.2			
	8	1 240 CI/7.85	2 300 CI/8	2 910 CI/8	5 020 CI/8.33	5 820 CI/8.33	10 050 CI/7.85	20 300 CI/8	24 950 CI/8.15	40 550 CI/8.27	50 850 CI/8.31	80 950 CI/8.27	98 150 CI/8.14	150 900 CI/8.21	196 500 CI/8.15	254 100 CI/7.83	316 500 CI/7.83	382 600 CI/8			
	6.3	1 090 CI/6.53	1 940 CI/6.57	2 460 CI/6.57	4 190 CI/6.27	4 690 CI/6.27	8 620 CI/6.53	18 350 CI/6.57	–	34 550 CI/6.27	–	72 000 CI/6.53	–	144 900 CI/6.57	–	246 700 CI/6.27	308 400 CI/6.27	–			
								114		225		–		–		–	–		5	2500	500
	5	–	–	–	–	–	–	14 550 CI/5.06	–	27 700 CI/4.89	–	57 900 CI/5.11	–	114 600 CI/5.06	–	197 800 CI/4.89	247 300 CI/4.89	–			
												369		–		–	–		4	2000	
	4	–	–	–	–	–	–	–	–	–	–	47 650 CI/4.1	–	93 100 CI/4	–	162 300 CI/3.9	202 900 CI/3.9	–			
5 600 000	31.5	–	–	–	–	–	–	–	24 850 C2I/32	44 800 C2I/33.1	52 750 C2I/33.2	82 150 C2I/34.2	105 500 C2I/33.7	173 200 C2I/33.1	208 000 C2I/33.7	271 300 C2I/31.3	337 600 C2I/31.3	428 000 C2I/32.5			
	31.5	1 100 ICI/32.1	1 630 ICI/33	1 930 ICI/33	3 640 ICI/31.4	4 000 ICI/31.4	7 640 ICI/32.8	15 500 ICI/32.4	–	32 750 ICI/31.4	–	67 300 ICI/32.7	–	–	–	–	–	–			
	31.5	–	1550 CI/31.3	1800 CI/31.3	3150 CI/32.5	3870 CI/32.5	5 890 CI/30.1	11 800 CI/31.3	–	23 300 CI/30.8	–	40 700 CI/30.8	–	84 000 CI/31.7	–	–	–	–			
	28	–	–	–	–	–	–	–	26 300 C2I/28.6	40 550 C2I/28.9	55 700 C2I/28.8	79 200 C2I/29.5	111 400 C2I/30.3	162 000 C2I/29.9	219 700 C2I/30.1	278 500 C2I/28	346 500 C2I/28	439 300 C2I/28.8			
	25	–	–	–	–	–	–	–	25 300 C2I/24.5	40 050 C2I/25.1	52 650 C2I/26	81 400 C2I/27	112 500 C2I/26.3	163 400 C2I/27.2	225 700 C2I/26.4	286 100 C2I/25.1	356 000 C2I/25.1	451 400 C2I/26			
	25	910 CI/24.1	1 820 CI/25	2 280 CI/25	3 640 CI/26	4 250 CI/26	6 900 CI/24.1	15 100 CI/25	–	29 900 CI/24.6	–	59 800 CI/24.6	–	122 400 CI/25.4	–	–	–	–			
	22.4	–	–	–	–	–	–	–	27 450 C2I/23.8	40 700 C2I/23.8	58 150 C2I/23.7	82 550 C2I/22.4	115 000 C2I/23	166 100 C2I/23.6	229 200 C2I/23.8	290 700 C2I/23	361 900 C2I/23	458 600 C2I/23.7			
	20	–	–	–	–	–	–	–	24 650 C2I/20.4	41 850 C2I/20.6	55 000 C2I/21.4	84 900 C2I/20.5	102 500 C2I/19.9	170 800 C2I/21.5	211 100 C2I/20.8	299 000 C2I/20.6	371 100 C2I/20.6	433 000 C2I/21.4			
	20	955 CI/19.3	1 790 CI/20	2 200 CI/20	3 840 CI/20.8	4 520 CI/20.8	7 900 CI/19.3	15 750 CI/20	22 650 CI/20	34 350 CI/19.7	45 300 CI/20.3	70 600 CI/19.7	90 650 CI/20.3	141 200 CI/20.3	179 100 CI/20	231 500 CI/19.7	276 400 CI/19.7	353 200 CI/20.3			
	18	–	–	–	–	–	–	–	23 650 CI/18	37 250 CI/18	49 050 CI/18.7	74 200 CI/18	97 200 CI/18.7	147 600 CI/17.9	187 700 CI/18	227 000 CI/18	286 600 CI/18	380 700 CI/18.4			
	16	1000 CI/15.2	1 890 CI/15.8	2 320 CI/15.8	4 020 CI/16.4	4 730 CI/16.4	8 270 CI/15.2	16 500 CI/15.8	24 000 CI/15.8	35 950 CI/15.5	50 850 CI/16	73 900 CI/15.5	101 000 CI/16	147 800 CI/16	202 400 CI/15.8	240 900 CI/16.3	300 400 CI/16.3	385 600 CI/16			
	14	–	–	–	–	–	–	–	25 750 CI/14.2	40 250 CI/14.2	53 400 CI/14.7	82 300 CI/14.2	105 200 CI/14.7	164 600 CI/14.1	202 800 CI/14.2	263 900 CI/14.2	313 100 CI/14.2	411 400 CI/14.5			

For n_1 lower than 560 rpm see page 195.

9 - Bevel helical gear reducer selection tables

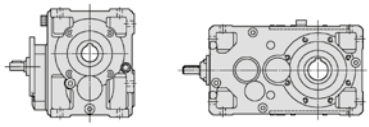

$n_{N2} \cdot L_h$ rpm · h	i_N	50	63	64	80	81	100	125	140	160	180	200	225	250	280	320	321	360	i_N	n_1 rpm	n_{N2}
		Nominal output power P_{N2} [hp] / Nominal output torque T_{N2} [lb in] / Train of gears / ratio … / i																			
5 600 000	12.5	1 200 CI/12.4	2 210 CI/12.6	2 790 CI/12.6	4 890 CI/13.1	5 660 CI/13.1	9 660 CI/12.4	20 000 CI/12.6	23 950 CI/12.9	42 550 CI/13	48 850 CI/13.1	85 050 CI/13	94 250 CI/12.8	164 700 CI/12.6	188 800 CI/12.9	255 400 CI/12.8	312 700 CI/12.8	367 500 CI/12.6			
	11.2	–	–	–	–	–	–	–	27 650 CI/11.3	37 700 CI/11.4	58 750 CI/11.7	74 500 CI/11.3	116 500 CI/11.7	150 800 CI/11.4	224 600 CI/11.3	260 800 CI/11	326 000 CI/11	425 800 CI/11.5			
	10	1 170 CI/10.3	2 360 CI/10	2 890 CI/10	4 990 CI/10.4	5 780 CI/10.4	10 150 CI/9.81	20 300 CI/10	26 150 CI/10.2	40 800 CI/10.3	53 300 CI/10.4	81 350 CI/10.3	102 900 CI/10.2	162 500 CI/10	206 100 CI/10.2	289 300 CI/10.2	354 200 CI/10.2	398 400 CI/10			
	9	–	–	–	–	–	–	–	27 550 CI/9	41 500 CI/9.04	57 150 CI/9.33	82 000 CI/8.93	112 500 CI/9.33	166 000 CI/9.04	216 900 CI/9	283 900 CI/8.75	353 500 CI/8.75	428 700 CI/9.2			
	8	1 250 CI/7.85	2 330 CI/8	2 950 CI/8	5 100 CI/8.33	5 900 CI/8.33	10 200 CI/7.85	20 600 CI/8	25 300 CI/8.15	41 150 CI/8.27	51 600 CI/8.31	82 100 CI/8.27	99 550 CI/8.14	153 000 CI/8.21	199 400 CI/8.15	257 800 CI/7.83	321 000 CI/7.83	388 100 CI/8			
		7.54	13.3	16.8	30.2	33.7	59.4	126		248		–		–		–	–		6.3	2800	**450**
	6.3	1 110 CI/6.53	1 970 CI/6.57	2 490 CI/6.57	4 250 CI/6.27	4 750 CI/6.27	8 740 CI/6.53	18 650 CI/6.57	–	35 050 CI/6.27 ▲	–	73 050 CI/6.53	–	146 900 CI/6.57	–	250 200 CI/6.27	312 700 CI/6.27	–			
								103		204		408		–		–	–		5	2240	
	5	–	–	–	–	–	–	14 750 CI/5.06	–	28 050 CI/4.89	–	58 700 CI/5.11 ▲	–	116 200 CI/5.06	–	200 500 CI/4.89	250 600 CI/4.89	–			
												337		673		–	–		4	1800	
	4	–	–	–	–	–	–	–	–	–	–	48 250 CI/4.1	–	94 250 CI/4 ▲	–	164 300 CI/3.9	205 400 CI/3.9	–			
5 000 000	35.5	–	–	–	–	–	–	–	25 600 C2I/37.5	38 000 C2I/37.5	54 250 C2I/37.3	77 150 C2I/35.3	106 400 C2I/36.2	154 900 C2I/37.2	214 000 C2I/37.5	271 300 C2I/36.3	337 600 C2I/36.3	428 000 C2I/37.3			
	31.5	–	–	–	–	–	–	–	25 500 C2I/32	46 350 C2I/33.1	54 150 C2I/33.2	85 000 C2I/34.2	108 300 C2I/33.7	179 200 C2I/33.1	213 500 C2I/33.7	278 500 C2I/31.3	346 500 C2I/31.3	439 300 C2I/32.5			
	31.5	1 140 ICI/32.1	1 680 ICI/33	1 980 ICI/33	3 740 ICI/31.4	4 110 ICI/31.4	7 850 ICI/32.8	15 900 ICI/32.4	–	33 600 ICI/31.4	–	69 050 ICI/32.7	–	–	–	–	–	–			
	31.5	–	1550 CI/31.3	1850 CI/31.3	3250 CI/32.5	4000 CI/32.5	6 100 CI/30.1	12 200 CI/31.3	–	24 100 CI/30.8	–	41 800 CI/30.8	–	86 200 CI/31.7	–	–	–	–			
	28	–	–	–	–	–	–	–	27 000 C2I/28.6	41 900 C2I/28.9	57 200 C2I/28.8	81 400 C2I/29.5	114 400 C2I/30.3	167 400 C2I/29.9	225 700 C2I/30.1	286 100 C2I/28	356 000 C2I/28	451 400 C2I/28.8			
	25	–	–	–	–	–	–	–	25 950 C2I/24.5	41 050 C2I/25.1	54 000 C2I/26	83 450 C2I/27	115 400 C2I/26.3	167 500 C2I/27.2	231 400 C2I/26.4	293 400 C2I/25.1	365 100 C2I/25.1	462 900 C2I/26			
	25	945 CI/24.1	1 880 CI/25	2 360 CI/25	3 740 CI/26	4 400 CI/26	7 080 CI/24.1	15 500 CI/25	–	30 650 CI/24.6	–	61 350 CI/24.6	–	125 500 CI/25.4	–	–	–	–			
	22.4	–	–	–	–	–	–	–	28 200 C2I/23.8	41 850 C2I/23.8	59 800 C2I/23.7	84 900 C2I/22.4	118 300 C2I/23	170 800 C2I/23.6	235 800 C2I/23.8	299 000 C2I/23	372 200 C2I/23	471 700 C2I/23.7			
	20	–	–	–	–	–	–	–	25 450 C2I/20.4	43 200 C2I/20.6	56 750 C2I/21.4	87 650 C2I/20.5	105 800 C2I/19.9	176 300 C2I/21.5	218 000 C2I/20.8	308 700 C2I/20.6	383 100 C2I/20.6	447 100 C2I/21.4			
	20	985 CI/19.3	1 850 CI/20	2 280 CI/20	3 980 CI/20.8	4 680 CI/20.8	8 150 CI/19.3	16 250 CI/20	23 400 CI/20	35 450 CI/19.7	46 800 CI/20.3	72 850 CI/19.7	93 600 CI/20.3	145 700 CI/20.3	184 900 CI/20	239 000 CI/19.7	285 400 CI/19.7	364 700 CI/20.3			

For n_1 lower than 560 rpm see page 195.
▲ Possible forced lubrication with heat exchanger: consult us.

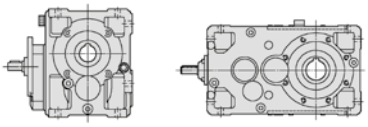

$n_{N2} \cdot L_h$ rpm · h	i_N	50	63	64	80	81	100	125	140	160	180	200	225	250	280	320	321	360	i_N	n_1 rpm	n_{N2}
		Nominal output power P_{N2} [hp] Nominal output torque T_{N2} [lb in] Train of gears / ratio … / i																			
5 000 000	18	–	–	–	–	–	–	–	24 300 CI/18	38 250 CI/18	50 400 CI/18.7	76 200 CI/18	99 850 CI/18.7	151 600 CI/17.9	192 900 CI/18	233 200 CI/18	294 400 CI/18	391 100 CI/18.4			
	16	1 030 CI/15.2	1 940 CI/15.8	2 380 CI/15.8	4 170 CI/16.4	4 900 CI/16.4	8 490 CI/15.2	16 950 CI/15.8	24 650 CI/15.8	36 950 CI/15.5	52 200 CI/16	75 900 CI/15.5	103 700 CI/16	151 800 CI/16	207 800 CI/15.8	247 300 CI/16.3	308 400 CI/16.3	395 800 CI/16			
	14	–	–	–	–	–	–	–	26 450 CI/14.2	41 350 CI/14.2	54 900 CI/14.7	84 550 CI/14.2	108 100 CI/14.7	169 100 CI/14.1	208 400 CI/14.2	271 100 CI/14.2	321 700 CI/14.2	422 700 CI/14.5			
	12.5	1 220 CI/12.4	2 240 CI/12.6	2 830 CI/12.6	4 960 CI/13.1	5 740 CI/13.1	9 790 CI/12.4	20 300 CI/12.6	24 300 CI/12.9	43 100 CI/13	49 500 CI/13.1	86 250 CI/13	95 550 CI/12.8	166 900 CI/12.6	191 400 CI/12.9	258 900 CI/12.8	316 900 CI/12.8	372 500 CI/12.6			
	11.2	–	–	–	–	–	–	–	28 000 CI/11.3	38 200 CI/11.4	59 450 CI/11.7	75 450 CI/11.3	118 000 CI/11.7	152 800 CI/11.4	227 500 CI/11.3	264 100 CI/11	330 100 CI/11	431 200 CI/11.5			
	10	1 190 CI/10.3	2 390 CI/10	2 930 CI/10	5 060 CI/10.4	5 860 CI/10.4	10 300 CI/9.81	20 550 CI/10	26 500 CI/10.2	41 350 CI/10.3	54 050 CI/10.4	82 500 CI/10.3	104 400 CI/10.2	164 800 CI/10	209 000 CI/10.2	293 400 CI/10.2	359 200 CI/10.2	404 000 CI/10			
	9	–	–	–	–	–	–	–	27 950 CI/9	42 100 CI/9.04	57 950 CI/9.33	83 150 CI/8.93	114 100 CI/9.33	168 400 CI/9.04	220 000 CI/9	288 000 CI/8.75	358 600 CI/8.75	434 900 CI/9.2			
	8	1 270 CI/7.85	2 360 CI/8	2 990 CI/8	5 170 CI/8.33	5 990 CI/8.33	10 350 CI/7.85	20 900 CI/8	25 700 CI/8.15	41 700 CI/8.27	52 350 CI/8.31	83 300 CI/8.27	101 000 CI/8.14	155 200 CI/8.21	202 200 CI/8.15	261 500 CI/7.83	325 600 CI/7.83	393 700 CI/8			
	6.3	6.82 1 120 CI/6.53	12 1 990 CI/6.57	15.2 2 530 CI/6.57	27.3 4 310 CI/6.27	30.5 4 820 CI/6.27	53.8 8 860 CI/6.53	114 18 900 CI/6.57	–	225 35 500 CI/6.27	–	– 74 050 CI/6.53	–	– 148 900 CI/6.57	–	– 253 600 CI/6.27	– 317 000 CI/6.27	–	6.3	2500	400
	5	–	–	–	–	–	–	93.6 14 950 CI/5.06	–	185 28 450 CI/4.89	–	369 59 500 CI/5.11	–	– 117 700 CI/5.06	–	– 203 200 CI/4.89	– 254 000 CI/4.89	–	5	2000	
	4	–	–	–	–	–	–	–	–	–	–	303 48 950 CI/4.1	–	607 95 600 CI/4	–	– 166 700 CI/3.9	– 208 300 CI/3.9	–	4	1600	
4 500 000	40	–	–	–	–	–	–	–	24 650 C2I/38.7	38 000 C2I/39.5	51 200 C2I/41	77 150 C2I/42.6	108 500 C2I/41.4	154 900 C2I/42.8	214 000 C2I/41.6	271 300 C2I/39.5	337 600 C2I/39.5	428 000 C2I/41			
	40	1220 ICI/38.6	1 900 ICI/40.1	2 340 ICI/40.1	4 040 ICI/41.8	4 670 ICI/41.8	8 480 ICI/39.4	16 900 ICI/39.4	19 600 ICI/40.2	37 050 ICI/41.4	43 400 ICI/41.6	75 350 ICI/41.4	–	–	–	–	–	–			
	35.5	–	–	–	–	–	–	–	26 300 C2I/37.5	39 000 C2I/37.5	55 700 C2I/37.3	79 200 C2I/35.3	109 200 C2I/36.2	159 000 C2I/37.2	219 700 C2I/37.5	278 500 C2I/36.3	346 500 C2I/36.3	439 300 C2I/37.3			
	31.5	–	–	–	–	–	–	–	26 200 C2I/32	47 900 C2I/33.1	55 650 C2I/33.2	87 850 C2I/34.2	111 300 C2I/33.7	185 200 C2I/33.1	219 300 C2I/33.7	286 100 C2I/31.3	356 000 C2I/31.3	451 400 C2I/32.5			
	31.5	1 170 ICI/32.1	1 720 ICI/33	2 050 ICI/33	3 840 ICI/31.4	4 220 ICI/31.4	8 060 ICI/32.8	16 350 ICI/32.4	–	34 500 ICI/31.4	–	70 950 ICI/32.7	–	–	–	–	–	–			
	31.5	–	1600 CI/31.3	1900 CI/31.3	3350 CI/32.5	4120 CI/32.5	6 300 CI/30.1	12 600 CI/31.3	–	24 900 CI/30.8	–	42 950 CI/30.8	–	88 550 CI/31.7	–	–	–	–			
	28	–	–	–	–	–	–	–	27 700 C2I/28.6	43 350 C2I/28.9	58 650 C2I/28.8	83 450 C2I/29.5	117 300 C2I/30.3	173 200 C2I/29.9	231 400 C2I/30.1	293 400 C2I/28	365 100 C2I/28	462 900 C2I/28.8			

For n_1 lower than 560 rpm see page 195.

9 - Bevel helical gear reducer selection tables

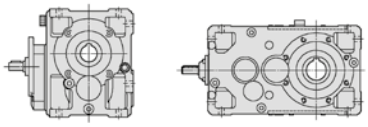

$n_{N2} \cdot L_h$ rpm · h	i_N	50	63	64	80	81	100	125	140	160	180	200	225	250	280	320	321	360	i_N	n_1 rpm	n_{N2}
		Nominal output power P_{N2} [hp] Nominal output torque T_{N2} [lb in] Train of gears / ratio … / i																			
4 500 000	25	–	–	–	–	–	–	–	26 700 C2I/24.5	42 250 C2I/25.1	55 550 C2I/26	85 850 C2I/27	118 700 C2I/26.3	172 300 C2I/27.2	238 000 C2I/26.4	301 700 C2I/25.1	375 500 C2I/25.1	476 100 C2I/26			
	25	975 CI/24.1	1 940 CI/25	2 430 CI/25	3 860 CI/26	4 540 CI/26	7 280 CI/24.1	15 950 CI/25	–	31 550 CI/24.6	–	63 100 CI/24.6	–	129 100 CI/25.4	–	–	–	–			
	22.4	–	–	–	–	–	–	–	29 100 C2I/23.8	43 200 C2I/23.8	61 750 C2I/23.7	87 650 C2I/22.4	122 200 C2I/23	176 300 C2I/23.6	243 400 C2I/23.8	308 700 C2I/23	384 200 C2I/23	486 900 C2I/23.7			
	20	–	–	–	–	–	–	–	26 150 C2I/20.4	44 400 C2I/20.6	58 350 C2I/21.4	90 050 C2I/20.5	108 700 C2I/19.9	181 100 C2I/21.5	223 900 C2I/20.8	317 100 C2I/20.6	393 600 C2I/20.6	459 300 C2I/21.4			
	20	1 010 CI/19.3	1 900 CI/20	2 360 CI/20	4 120 CI/20.8	4 850 CI/20.8	8 380 CI/19.3	16 700 CI/20	24 050 CI/20	36 400 CI/19.7	48 050 CI/20.3	74 850 CI/19.7	96 150 CI/20.3	149 700 CI/20.3	189 900 CI/20	245 500 CI/19.7	293 200 CI/19.7	374 700 CI/20.3			
	18	–	–	–	–	–	–	–	24 950 CI/18	39 300 CI/18	51 750 CI/18.7	78 250 CI/18	102 500 CI/18.7	155 600 CI/17.9	198 000 CI/18	239 400 CI/18	302 200 CI/18	401 500 CI/18.4			
	16	1 060 CI/15.2	1 990 CI/15.8	2 450 CI/15.8	4 320 CI/16.4	5 080 CI/16.4	8 720 CI/15.2	17 400 CI/15.8	25 300 CI/15.8	37 950 CI/15.5	53 600 CI/16	77 950 CI/15.5	106 600 CI/16	155 900 CI/16	213 500 CI/15.8	254 100 CI/16.3	316 900 CI/16.3	406 700 CI/16			
	14	–	–	–	–	–	–	–	26 800 CI/14.2	41 900 CI/14.2	55 650 CI/14.7	85 700 CI/14.2	109 500 CI/14.7	171 400 CI/14.1	211 200 CI/14.2	274 800 CI/14.2	326 000 CI/14.2	428 400 CI/14.5			
	12.5	1 240 CI/12.4	2 260 CI/12.6	2 870 CI/12.6	5 020 CI/13.1	5 810 CI/13.1	9 920 CI/12.4	20 550 CI/12.6	24 600 CI/12.9	43 650 CI/13	50 150 CI/13.1	87 300 CI/13	96 750 CI/12.8	169 000 CI/12.6	193 800 CI/12.9	262 100 CI/12.8	320 900 CI/12.8	377 300 CI/12.6			
	11.2	–	–	–	–	–	–	–	28 400 CI/11.3	38 750 CI/11.4	60 300 CI/11.7	76 500 CI/11.3	119 600 CI/11.7	154 900 CI/11.4	230 700 CI/11.3	267 800 CI/11	334 800 CI/11	437 300 CI/11.5			
	10	1 200 CI/10.3	2 430 CI/10	2 970 CI/10	5 130 CI/10.4	5 940 CI/10.4	10 450 CI/9.81	20 850 CI/10	26 900 CI/10.2	41 950 CI/10.3	54 800 CI/10.4	83 700 CI/10.3	105 900 CI/10.2	167 100 CI/10	212 000 CI/10.2	297 600 CI/10.2	364 400 CI/10.2	409 800 CI/10			
	9	–	–	–	–	–	–	–	28 350 CI/9	42 700 CI/9.04	58 800 CI/9.33	84 350 CI/8.93	115 700 CI/9.33	170 800 CI/9.04	223 200 CI/9	292 100 CI/8.75	363 700 CI/8.75	441 100 CI/9.2			
	8	7.31 1 290 CI/7.85	13.3 2 400 CI/8	16.8 3 030 CI/8	28 5 240 CI/8.33	32.4 6 070 CI/8.33	59.4 10 500 CI/7.85	118 21 200 CI/8	142 26 050 CI/8.15	227 42 300 CI/8.27▲	284 53 050 CI/8.31▲	– 84 500 CI/8.27	– 102 400 CI/8.14	– 157 400 CI/8.21	– 205 100 CI/8.15	– 265 200 CI/7.83	– 330 300 CI/7.83	– 399 200 CI/8	8	2800	355
	6.3	6.19 1 140 CI/6.53	10.9 2 020 CI/6.57	13.8 2 560 CI/6.57	24.8 4 370 CI/6.27	27.7 4 880 CI/6.27	48.8 8 970 CI/6.53	103 19 150 CI/6.57	– –	204 35 950 CI/6.27	– –	408 75 000 CI/6.53▲	– –	– 150 900 CI/6.57	– –	– 256 900 CI/6.27	– 321 200 CI/6.27	– –	6.3	2240	
	5	– –	– –	– –	– –	– –	– –	85.3 15 100 CI/5.06	– –	168 28 800 CI/4.89	– –	337 60 250 CI/5.11	– –	673 119 200 CI/5.06▲	– –	– 205 800 CI/4.89	– 257 200 CI/4.89	– –	5	1800	
	4	– –	– –	– –	– –	– –	– –	– –	– –	– –	– –	270 49 750 CI/4.1	– –	539 97 150 CI/4	– –	963 169 300 CI/3.9▲	1 204 211 700 CI/3.9▲	– –	4	1400	
4 000 000	45	–	–	–	–	–	–	–	25 600 C2I/45.1	38 000 C2I/45.6	54 250 C2I/45.4	77 150 C2I/46.6	108 500 C2I/47.8	154 900 C2I/47.1	214 000 C2I/47.5	271 300 C2I/44.2	337 600 C2I/44.2	428 000 C2I/45.4			
	40	–	–	–	–	–	–	–	25 300 C2I/38.7	39 000 C2I/39.5	52 600 C2I/41	79 200 C2I/42.6	111 400 C2I/41.4	159 000 C2I/42.8	219 700 C2I/41.6	278 500 C2I/39.5	346 500 C2I/39.5	439 300 C2I/41			

For n_1 lower than 560 rpm see page 195.
▲ Possible forced lubrication with heat exchanger: consult us.

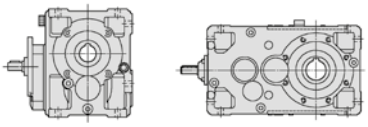

$n_{N2} \cdot L_h$ rpm · h	i_N	50	63	64	80	81	100	125	140	160	180	200	225	250	280	320	321	360	i_N	n_1 rpm	n_{N2}
		Nominal output power P_{N2} [hp] Nominal output torque T_{N2} [lb in] Train of gears / ratio … / i																			
4 000 000	40	1250 ICI/38.6	1 950 ICI/40.1	2 420 ICI/40.1	4 150 ICI/41.8	4 800 ICI/41.8	8 770 ICI/39.4	17 350 ICI/39.4	20 100 ICI/40.2	38 050 ICI/41.4	44 550 ICI/41.6	77 350 ICI/41.4	–	–	–	–	–	–			
	35.5	–	–	–	–	–	–	–	27 000 C2I/37.5	40 050 C2I/37.5	57 200 C2I/37.3	81 400 C2I/35.3	112 200 C2I/36.2	163 400 C2I/37.2	225 700 C2I/37.5	286 100 C2I/36.3	356 000 C2I/36.3	451 400 C2I/37.3			
	31.5	–	–	–	–	–	–	–	26 850 C2I/32	49 550 C2I/33.1	57 050 C2I/33.2	90 850 C2I/34.2	114 100 C2I/33.7	191 600 C2I/33.1	224 900 C2I/33.7	293 400 C2I/31.3	365 100 C2I/31.3	462 900 C2I/32.5			
	31.5	1 220 ICI/32.1	1 770 ICI/33	2 120 ICI/33	3 940 ICI/31.4	4 330 ICI/31.4	8 270 ICI/32.8	16 750 ICI/32.4	–	35 400 ICI/31.4	–	72 750 ICI/32.7	–	–	–	–	–	–			
	31.5	–	1650 CI/31.3	1950 CI/31.3	3450 CI/32.5	4120 CI/32.5	6 520 CI/30.1	13 050 CI/31.3	–	25 750 CI/30.8	–	44 050 CI/30.8	–	90 800 CI/31.7	–	–	–	–			
	28	–	–	–	–	–	–	–	28 500 C2I/28.6	44 750 C2I/28.9	60 350 C2I/28.8	85 850 C2I/29.5	120 700 C2I/30.3	178 700 C2I/29.9	238 000 C2I/30.1	301 700 C2I/28	375 500 C2I/28	476 100 C2I/28.8			
	25	–	–	–	–	–	–	–	27 550 C2I/24.5	43 600 C2I/25.1	57 350 C2I/26	88 600 C2I/27	122 500 C2I/26.3	177 900 C2I/27.2	245 700 C2I/26.4	311 500 C2I/25.1	387 600 C2I/25.1	491 500 C2I/26			
	25	1 010 CI/24.1	2 000 CI/25	2 500 CI/25	4 000 CI/26	4 710 CI/26	7 520 CI/24.1	16 450 CI/25	–	32 550 CI/24.6	–	65 100 CI/24.6	–	133 300 CI/25.4	–	–	–	–			
	22.4	–	–	–	–	–	–	–	29 900 C2I/23.8	44 400 C2I/23.8	63 400 C2I/23.7	90 050 C2I/22.4	125 500 C2I/23	181 100 C2I/23.6	250 100 C2I/23.8	317 100 C2I/23	394 800 C2I/23	500 300 C2I/23.7			
	20	–	–	–	–	–	–	–	26 850 C2I/20.4	45 550 C2I/20.6	59 850 C2I/21.4	92 450 C2I/20.5	111 600 C2I/19.9	185 900 C2I/21.5	229 900 C2I/20.8	325 500 C2I/20.6	404 100 C2I/20.6	471 500 C2I/21.4			
	20	1 040 CI/19.3	1 960 CI/20	2 450 CI/20	4 270 CI/20.8	5 030 CI/20.8	8 600 CI/19.3	17 150 CI/20	24 700 CI/20	37 400 CI/19.7	49 350 CI/20.3	76 850 CI/19.7	98 700 CI/20.3	153 700 CI/20.3	195 000 CI/20	252 000 CI/19.7	301 000 CI/19.7	384 600 CI/20.3			
	18	–	–	–	–	–	–	–	25 650 CI/18	40 350 CI/18	53 150 CI/18.7	80 400 CI/18	105 300 CI/18.7	159 900 CI/17.9	203 400 CI/18	245 900 CI/18	310 500 CI/18	412 500 CI/18.4			
	16	1 070 CI/15.2	2 020 CI/15.8	2 480 CI/15.8	4 420 CI/16.4	5 200 CI/16.4	8 840 CI/15.2	17 650 CI/15.8	25 650 CI/15.8	38 450 CI/15.5	54 350 CI/16	79 000 CI/15.5	108 000 CI/16	158 000 CI/16	216 400 CI/15.8	257 500 CI/16.3	321 200 CI/16.3	412 200 CI/16			
	14	–	–	–	–	–	–	–	27 150 CI/14.2	42 450 CI/14.2	56 350 CI/14.7	86 800 CI/14.2	110 900 CI/14.7	173 600 CI/14.1	213 900 CI/14.2	278 300 CI/14.2	330 200 CI/14.2	433 800 CI/14.5			
	12.5	1 250 CI/12.4	2 300 CI/12.6	2 910 CI/12.6	5 090 CI/13.1	5 900 CI/13.1	10 050 CI/12.4	20 850 CI/12.6	24 950 CI/12.9	44 300 CI/13	50 850 CI/13.1	88 550 CI/13	98 150 CI/12.8	171 400 CI/12.6	196 500 CI/12.9	265 900 CI/12.8	325 500 CI/12.8	382 600 CI/12.6			
	11.2	–	–	–	–	–	–	–	28 800 CI/11.3	39 300 CI/11.4	61 200 CI/11.7	77 600 CI/11.3	121 300 CI/11.7	157 100 CI/11.4	234 000 CI/11.3	271 700 CI/11	339 600 CI/11	443 600 CI/11.5			
	10	1 220 CI/10.3	2 460 CI/10	3 010 CI/10	5 200 CI/10.4	6 030 CI/10.4	10 600 CI/9.81	21 150 CI/10	27 300 CI/10.2	42 550 CI/10.3	55 600 CI/10.4	84 900 CI/10.3	107 400 CI/10.2	169 500 CI/10	215 100 CI/10.2	301 900 CI/10.2	369 600 CI/10.2	415 700 CI/10			
									142	213	284	426	–	–	–	–	–	–	9	2800	**315**
	9	–	–	–	–	–	–	–	28 750 CI/9	43 300 CI/9.04	59 600 CI/9.33▲	85 550 CI/8.93▲	117 400 CI/9.33	173 200 CI/9.04	226 400 CI/9	296 200 CI/8.75	368 900 CI/8.75	447 400 CI/9.2			

For n_1 lower than 560 rpm see page 195.
▲ Possible forced lubrication with heat exchanger: consult us.

9 - Bevel helical gear reducer selection tables

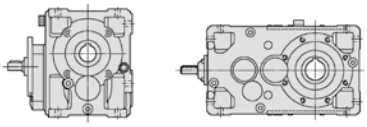

$n_{N2} \cdot L_h$ rpm · h	i_N	50	63	64	80	81	100	125	140	160	180	200	225	250	280	320	321	360	i_N	n_1 rpm	n_{N2}
		Nominal output power P_{N2} [hp] Nominal output torque T_{N2} [lb in] Train of gears / ratio … / i																			
4 000 000	8	6.61 1 310 CI/7.85	12 2 430 CI/8	15.2 3 080 CI/8	25.3 5 310 CI/8.33	29.3 6 150 CI/8.33	53.8 10 650 CI/7.85	107 21 500 CI/8	128 26 400 CI/8.15	206 42 900 CI/8.27	257 53 800 CI/8.31	– 85 650 CI/8.27	– 103 800 CI/8.14	– 159 600 CI/8.21	– 207 900 CI/8.15	– 268 800 CI/7.83	– 334 800 CI/7.83	– 404 700 CI/8	8	2500	**315**
	6.3	5.6 1 150 CI/6.53	9.89 2 050 CI/6.57	12.5 2 590 CI/6.57	22.4 4 430 CI/6.27	25.1 4 950 CI/6.27	44.2 9 100 CI/6.53	93.6 19 400 CI/6.57	– –	185 36 450 CI/6.27	– –	369 76 050 CI/6.53	– –	– 152 900 CI/6.57	– –	– 260 400 CI/6.27	– 325 600 CI/6.27	– –	6.3	2000	
	5	– –	– –	– –	– –	– –	– –	76.9 15 350 CI/5.06	– –	152 29 200 CI/4.89	– –	303 61 100 CI/5.11	– –	607 120 900 CI/5.06	– –	– 208 700 CI/4.89	– 260 800 CI/4.89	– –	5	1600	
	4	– –	– –	– –	– –	– –	– –	– –	– –	– –	– –	243 50 250 CI/4.1	– –	487 98 150 CI/4	– –	869 171 000 CI/3.9	1 086 213 800 CI/3.9	– –	4	1250	
3 550 000	50	–	–	–	–	–	–	–	24 850 C2I/50.4	42 700 C2I/52.1	52 750 C2I/52.4	89 000 C2I/53.9	105 500 C2I/53.1	159 500 C2I/52.1	208 000 C2I/53.1	263 400 C2I/51.3	319 500 C2I/51.3	415 900 C2I/50.5			
	50	1220 ICI/49	1 970 ICI/50.9	2 460 ICI/50.9	3 780 ICI/53	4 270 ICI/53	8 370 ICI/49.9	16 900 ICI/50	21 400 ICI/49.3	37 050 ICI/52.5	45 200 ICI/50.8	74 850 ICI/52.5	–	–	–	–	–	–			
	45	–	–	–	–	–	–	–	26 300 C2I/45.1	39 000 C2I/45.6	55 700 C2I/45.4	79 550 C2I/46.6	111 400 C2I/47.8	159 000 C2I/47.1	219 700 C2I/47.5	278 500 C2I/44.2	346 500 C2I/44.2	439 300 C2I/45.4			
	40	–	–	–	–	–	–	–	25 950 C2I/38.7	40 050 C2I/39.5	54 000 C2I/41	81 400 C2I/42.6	114 400 C2I/41.4	163 400 C2I/42.8	225 700 C2I/41.6	286 100 C2I/39.5	356 000 C2I/39.5	451 400 C2I/41			
	40	1280 ICI/38.6	2 000 ICI/40.1	2 500 ICI/40.1	4 260 ICI/41.8	4 930 ICI/41.8	9 060 ICI/39.4	17 800 ICI/39.4	20 650 ICI/40.2	39 100 ICI/41.4	45 750 ICI/41.6	79 450 ICI/41.4	–	–	–	–	–	–			
	35.5	–	–	–	–	–	–	–	27 700 C2I/37.5	41 050 C2I/37.5	58 650 C2I/37.3	83 450 C2I/35.3	115 000 C2I/36.2	167 500 C2I/37.2	231 400 C2I/37.5	293 400 C2I/36.3	365 100 C2I/36.3	462 900 C2I/37.3			
	31.5	–	–	–	–	–	–	–	27 650 C2I/32	51 150 C2I/33.1	58 650 C2I/33.2	93 800 C2I/34.2	117 300 C2I/33.7	197 700 C2I/33.1	231 300 C2I/33.7	301 700 C2I/31.3	375 500 C2I/31.3	476 100 C2I/32.5			
	31.5	1 250 ICI/32.1	1 820 ICI/33	2 190 ICI/33	4 050 ICI/31.4	4 450 ICI/31.4	8 500 ICI/32.8	17 250 ICI/32.4	–	36 400 ICI/31.4	–	74 850 ICI/32.7	–	–	–	–	–	–			
	31.5	–	1700 CI/31.3	2000 CI/31.3	3550 CI/32.5	4250 CI/32.5	6 730 CI/30.1	13 450 CI/31.3	–	26 600 CI/30.8	–	45 300 CI/30.8	–	93 400 CI/31.7	–	–	–	–			
	28	–	–	–	–	–	–	–	29 400 C2I/28.6	46 350 C2I/28.9	62 300 C2I/28.8	88 600 C2I/29.5	124 600 C2I/30.3	185 200 C2I/29.9	245 700 C2I/30.1	311 500 C2I/28	387 600 C2I/28	491 500 C2I/28.8			
	25	–	–	–	–	–	–	–	28 350 C2I/24.5	44 800 C2I/25.1	58 900 C2I/26	91 050 C2I/27	125 900 C2I/26.3	182 800 C2I/27.2	252 500 C2I/26.4	320 000 C2I/25.1	398 300 C2I/25.1	504 900 C2I/26			
	25	1 050 CI/24.1	2 010 CI/25	2 510 CI/25	4 150 CI/26	4 880 CI/26	7 720 CI/24.1	16 900 CI/25	–	33 450 CI/24.6	–	66 900 CI/24.6	–	136 900 CI/25.4	–	–	–	–			
	22.4	–	–	–	–	–	–	–	30 700 C2I/23.8	45 550 C2I/23.8	65 100 C2I/23.7	92 450 C2I/22.4	128 800 C2I/23	185 900 C2I/23.6	256 700 C2I/23.8	325 500 C2I/23	405 200 C2I/23	513 500 C2I/23.7			
	20	–	–	–	–	–	–	–	27 550 C2I/20.4	46 800 C2I/20.6	61 500 C2I/21.4	95 000 C2I/20.5	114 700 C2I/19.9	191 000 C2I/21.5	236 200 C2I/20.8	334 400 C2I/20.6	415 100 C2I/20.6	484 400 C2I/21.4			

For n_1 lower than 560 rpm see page 195.

9 - Bevel helical gear reducer selection tables

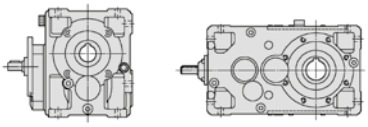

$n_{N2} \cdot L_h$ rpm · h	i_N	50	63	64	80	81	100	125	140	160	180	200	225	250	280	320	321	360	i_N	n_1 rpm	n_{N2}
		Nominal output power P_{N2} [hp] Nominal output torque T_{N2} [lb in] Train of gears / ratio … / i																			
3 550 000	20	1 070 CI/19.3	2 010 CI/20	2 510 CI/20	4 430 CI/20.8	5 210 CI/20.8	8 830 CI/19.3	17 600 CI/20	25 350 CI/20	38 400 CI/19.7	50 700 CI/20.3	78 950 CI/19.7	101 400 CI/20.3	157 900 CI/20.3	200 300 CI/20	258 900 CI/19.7	309 200 CI/19.7	395 100 CI/20.3			
	18	–	–	–	–	–	–	–	26 000 CI/18	40 900 CI/18	53 900 CI/18.7	81 450 CI/18	106 700 CI/18.7	162 100 CI/17.9	206 200 CI/18	249 300 CI/18	314 800 CI/18	418 100 CI/18.4			
	16	1 090 CI/15.2	2 040 CI/15.8	2 510 CI/15.8	4 440 CI/16.4	5 220 CI/16.4	8 950 CI/15.2	17 850 CI/15.8	26 000 CI/15.8	38 950 CI/15.5	55 050 CI/16	80 000 CI/15.5	109 400 CI/16	160 000 CI/16	219 100 CI/15.8	260 800 CI/16.3	325 200 CI/16.3	417 400 CI/16			
	14	–	–	–	–	–	–	–	27 550 CI/14.2	43 050 CI/14.2	57 150 CI/14.7	88 000 CI/14.2	112 500 CI/14.7	176 000 CI/14.1	216 900 CI/14.2	282 200 CI/14.2	334 900 CI/14.2	440 000 CI/14.5			
	12.5	1 270 CI/12.4	2 330 CI/12.6	2 950 CI/12.6	5 170 CI/13.1	5 980 CI/13.1	10 200 CI/12.4	21 150 CI/12.6	25 300 CI/12.9	44 900 CI/13	51 600 CI/13.1	89 850 CI/13	99 550 CI/12.8	173 900 CI/12.6	199 400 CI/12.9	269 700 CI/12.8	330 200 CI/12.8	388 100 CI/12.6			
	11.2	–	–	–	–	–	–	–	29 200 CI/11.3	39 850 CI/11.4	62 050 CI/11.7	78 750 CI/11.3	123 100 CI/11.7	159 400 CI/11.4	237 400 CI/11.3	275 600 CI/11	344 500 CI/11	450 000 CI/11.5			
	10	5.34 1 240 CI/10.3	11.1 2 500 CI/10	13.6 3 050 CI/10	22.5 5 280 CI/10.4	26.1 6 110 CI/10.4	48.6 10 750 CI/9.81	95.3 21 450 CI/10	121 27 650 CI/10.2	186 43 150 CI/10.3	241 56 400 CI/10.4	370 86 100 CI/10.3▲	475 108 900 CI/10.2▲	– 171 900 CI/10	– 218 100 CI/10.2	– 306 100 CI/10.2	– 374 800 CI/10.2	– 421 600 CI/10	10	2800	280
	9	– – CI/9	– – CI/9	– – CI/9	– – CI/9	– – CI/9	– – CI/9	– – CI/9	128 29 150 CI/9	193 43 900 CI/9.04	257 60 450 CI/9.33	385 86 700 CI/8.93	– 119 000 CI/9.33	– 175 600 CI/9.04	– 229 500 CI/9	– 300 300 CI/8.75	– 373 900 CI/8.75	– 453 500 CI/9.2	9	2500	
	8	6 1 330 CI/7.85	10.9 2 460 CI/8	13.8 3 120 CI/8	23 5 380 CI/8.33	26.6 6 240 CI/8.33	48.8 10 800 CI/7.85	96.7 21 750 CI/8	117 26 750 CI/8.15	187 43 450 CI/8.27	233 54 500 CI/8.31	373 86 750 CI/8.27▲	459 105 200 CI/8.14▲	699 161 700 CI/8.21▲	– 210 600 CI/8.15	– 272 400 CI/7.83	– 339 200 CI/7.83	– 410 000 CI/8	8	2240	
	6.3	5.11 1 170 CI/6.53	9.01 2 070 CI/6.57	11.4 2 630 CI/6.57	20.4 4 480 CI/6.27	22.8 5 010 CI/6.27	40.3 9 210 CI/6.53	85.3 19 650 CI/6.57	– –	168 36 900 CI/6.27	– –	337 77 000 CI/6.53	– –	673 154 900 CI/6.57▲	– –	– 263 700 CI/6.27	– 329 700 CI/6.27	– –	6.3	1800	
	5	– –	– –	– –	– –	– –	– –	68.4 15 600 CI/5.06	– –	135 29 700 CI/4.89	– –	270 62 050 CI/5.11	– –	539 122 900 CI/5.06	– –	963 212 000 CI/4.89▲	1 204 265 000 CI/4.89▲	– –	5	1400	
	4	– –	– –	– –	– –	– –	– –	– –	– –	– –	– –	220 50 750 CI/4.1	– –	440 99 100 CI/4	– –	786 172 600 CI/3.9	982 215 800 CI/3.9	– –	4	1120	
3 150 000	56	–	–	–	–	–	–	–	25 600 C2I/55.4	46 700 C2I/57	51 650 C2I/56.8	91 550 C2I/55.5	108 500 C2I/56.9	171 700 C2I/56.1	214 000 C2I/56.6	271 300 C2I/56	337 600 C2I/56	428 000 C2I/57.6			
	50	–	–	–	–	–	–	–	25 500 C2I/50.4	44 200 C2I/52.1	54 150 C2I/52.4	92 050 C2I/53.9	108 300 C2I/53.1	165 000 C2I/52.1	213 500 C2I/53.1	270 400 C2I/51.3	328 000 C2I/51.3	427 000 C2I/50.5			
	50	1250 ICI/49	2 040 ICI/50.9	2 550 ICI/50.9	3 880 ICI/53	4 380 ICI/53	8 660 ICI/49.9	17 350 ICI/50	21 950 ICI/49.3	38 050 ICI/52.5	46 400 ICI/50.8	77 450 ICI/52.5	–	–	–	–	–	–			
	45	–	–	–	–	–	–	–	27 000 C2I/45.1	40 050 C2I/45.6	57 200 C2I/45.4	82 200 C2I/46.6	114 400 C2I/47.8	163 400 C2I/47.1	225 700 C2I/47.5	286 100 C2I/44.2	356 000 C2I/44.2	451 400 C2I/45.4			
	40	–	–	–	–	–	–	–	26 650 C2I/38.7	41 050 C2I/39.5	55 400 C2I/41	83 450 C2I/42.6	117 300 C2I/41.4	167 500 C2I/42.8	231 400 C2I/41.6	293 400 C2I/39.5	365 100 C2I/39.5	462 900 C2I/41			
	40	1320 ICI/38.6	2 070 ICI/40.1	2 580 ICI/40.1	4 370 ICI/41.8	5 050 ICI/41.8	9 380 ICI/39.4	18 250 ICI/39.4	21 200 ICI/40.2	40 100 ICI/41.4	46 950 ICI/41.6	81 500 ICI/41.4	–	–	–	–	–	–			

For n_1 lower than 560 rpm see page 195.
▲ Possible forced lubrication with heat exchanger: consult us.

9 - Bevel helical gear reducer selection tables

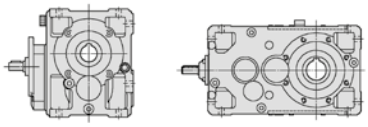

$n_{N2} \cdot L_h$ rpm · h	i_N	50	63	64	80	81	100	125	140	160	180	200	225	250	280	320	321	360	i_N	n_1 rpm	n_{N2}
		Nominal output power P_{N2} [hp] Nominal output torque T_{N2} [lb in] Train of gears / ratio … / i																			
3 150 000	35.5	–	–	–	–	–	–	–	28 500 C2I/37.5	42 250 C2I/37.5	60 350 C2I/37.3	85 850 C2I/35.3	118 300 C2I/36.2	172 300 C2I/37.2	238 000 C2I/37.5	301 700 C2I/36.3	375 500 C2I/36.3	476 100 C2I/37.3			
	31.5	–	–	–	–	–	–	–	28 500 C2I/32	53 000 C2I/33.1	60 550 C2I/33.2	97 150 C2I/34.2	121 100 C2I/33.7	204 900 C2I/33.1	238 800 C2I/33.7	311 500 C2I/31.3	387 600 C2I/31.3	491 500 C2I/32.5			
	31.5	1 300 ICI/32.1	1 880 ICI/33	2 270 ICI/33	4 180 ICI/31.4	4 590 ICI/31.4	8 780 ICI/32.8	17 800 ICI/32.4	–	37 600 ICI/31.4	–	77 250 ICI/32.7	–	–	–	–	–	–			
	31.5	–	1750 CI/31.3	2060 CI/31.3	3650 CI/32.5	4370 CI/32.5	6 970 CI/30.1	13 950 CI/31.3	–	27 550 CI/30.8	–	46 750 CI/30.8	–	96 450 CI/31.7	–	–	–	–			
	28	–	–	–	–	–	–	–	30 250 C2I/28.6	48 050 C2I/28.9	64 000 C2I/28.8	91 050 C2I/29.5	128 000 C2I/30.3	191 900 C2I/29.9	252 500 C2I/30.1	320 000 C2I/28	398 300 C2I/28	504 900 C2I/28.8			
	25	–	–	–	–	–	–	–	29 100 C2I/24.5	46 000 C2I/25.1	60 500 C2I/26	93 450 C2I/27	129 200 C2I/26.3	187 600 C2I/27.2	259 200 C2I/26.4	328 500 C2I/25.1	408 800 C2I/25.1	518 300 C2I/26			
	25	1 080 CI/24.1	2 010 CI/25	2 520 CI/25	4 300 CI/26	5 060 CI/26	7 930 CI/24.1	17 350 CI/25	–	34 350 CI/24.6	–	68 700 CI/24.6	–	140 600 CI/25.4	–	–	–	–			
	22.4	–	–	–	–	–	–	–	31 550 C2I/23.8	46 800 C2I/23.8	66 900 C2I/23.7	95 000 C2I/22.4	132 400 C2I/23	191 000 C2I/23.6	263 700 C2I/23.8	334 400 C2I/23	416 300 C2I/23	527 600 C2I/23.7			
	20	–	–	–	–	–	–	–	27 950 C2I/20.4	47 450 C2I/20.6	62 350 C2I/21.4	96 300 C2I/20.5	116 200 C2I/19.9	193 600 C2I/21.5	239 400 C2I/20.8	339 000 C2I/20.6	420 800 C2I/20.6	491 000 C2I/21.4			
	20	1 090 CI/19.3	2 030 CI/20	2 520 CI/20	4 450 CI/20.8	5 240 CI/20.8	8 960 CI/19.3	17 850 CI/20	25 700 CI/20	38 950 CI/19.7	51 400 CI/20.3	80 050 CI/19.7	102 800 CI/20.3	160 100 CI/20.3	203 000 CI/20	262 500 CI/19.7	313 400 CI/19.7	400 500 CI/20.3			
	18	–	–	–	–	–	–	–	26 300 CI/18	41 400 CI/18	54 600 CI/18.7	82 500 CI/18	108 100 CI/18.7	164 100 CI/17.9	208 800 CI/18	252 400 CI/18	318 700 CI/18	423 400 CI/18.4			
	16	1 110 CI/15.2	2 070 CI/15.8	2 550 CI/15.8	4 450 CI/16.4	5 240 CI/16.4	9 080 CI/15.2	18 100 CI/15.8	26 350 CI/15.8	39 500 CI/15.5	55 800 CI/16	81 150 CI/15.5	110 900 CI/16	162 300 CI/16	222 200 CI/15.8	264 500 CI/16.3	329 800 CI/16.3	423 400 CI/16			
	14	–	–	–	–	–	–	–	27 950 CI/14.2	43 650 CI/14.2	57 950 CI/14.7	89 300 CI/14.2	114 100 CI/14.7	178 600 CI/14.1	220 000 CI/14.2	286 200 CI/14.2	339 700 CI/14.2	446 300 CI/14.5			
	12.5	1 290 CI/12.4	2 360 CI/12.6	2 990 CI/12.6	5 240 CI/13.1	6 070 CI/13.1	10 350 CI/12.4	21 450 CI/12.6	25 700 CI/12.9	45 550 CI/13	52 350 CI/13.1	91 100 CI/13	101 000 CI/12.8	176 400 CI/12.6	202 200 CI/12.9	273 500 CI/12.8	334 900 CI/12.8	393 700 CI/12.6			
	11.2	–	–	–	–	–	–	–	117 29 650 CI/11.3	157 40 400 CI/11.4	240 62 950 CI/11.7	315 79 850 CI/11.3	475 124 800 CI/11.7▲	– 161 700 CI/11.4	– 240 700 CI/11.3	– 279 500 CI/11	– 349 300 CI/11	– 456 300 CI/11.5	11.2	2800	250
	10	4.83 1 260 CI/10.3	10 2 530 CI/10	12.3 3 100 CI/10	20.4 5 350 CI/10.4	23.6 6 190 CI/10.4	44 10 900 CI/9.81	86.3 21 750 CI/10	109 28 050 CI/10.2	168 43 750 CI/10.3	218 57 150 CI/10.4	335 87 300 CI/10.3	430 110 400 CI/10.2	– 174 300 CI/10	– 221 100 CI/10.2	– 310 300 CI/10.2	– 380 000 CI/10.2	– 427 300 CI/10	10	2500	
	9	–	–	–	–	–	–	–	117 29 500 CI/9	175 44 450 CI/9.04	233 61 250 CI/9.33	350 87 850 CI/8.93	459 120 500 CI/9.33▲	699 177 900 CI/9.04▲	– 232 500 CI/9	– 304 200 CI/8.75	– 378 900 CI/8.75	– 459 500 CI/9.2	9	2240	
	8	5.43 1 340 CI/7.85	9.89 2 490 CI/8	12.5 3 160 CI/8	20.8 5 460 CI/8.33	24.1 6 320 CI/8.33	44.2 10 900 CI/7.85	87.5 22 050 CI/8	106 27 100 CI/8.15	169 44 050 CI/8.27	211 55 250 CI/8.31	338 87 950 CI/8.27	415 106 600 CI/8.14	633 163 900 CI/8.21	– 213 500 CI/8.15	– 276 100 CI/7.83	– 343 800 CI/7.83	– 415 600 CI/8	8	2000	

For n_1 lower than 560 rpm see page 195.
▲ Possible forced lubrication with heat exchanger: consult us.

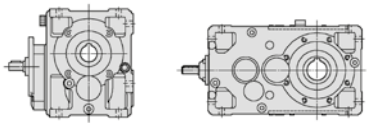

$n_{N2} \cdot L_h$ rpm · h	i_N	50	63	64	80	81	100	125	140	160	180	200	225	250	280	320	321	360	i_N	n_1 rpm	n_{N2}
		Nominal output power P_{N2} [hp] Nominal output torque T_{N2} [lb in] Train of gears / ratio ... / i																			
3 150 000	6.3	4.6 1 190 CI/6.53	8.13 2 100 CI/6.57	10.3 2 660 CI/6.57	18.4 4 550 CI/6.27	20.6 5 080 CI/6.27	36.3 9 340 CI/6.53	76.9 19 900 CI/6.57	–	152 37 450 CI/6.27	–	303 78 100 CI/6.53	–	607 157 100 CI/6.57	–	– 267 500 CI/6.27	– 334 300 CI/6.27	–	6.3	1600	250
	5	–	–	–	–	–	–	61.7 15 750 CI/5.06	–	122 30 050 CI/4.89	–	243 62 700 CI/5.11	–	487 124 100 CI/5.06	–	869 214 100 CI/4.89	1 086 267 700 CI/4.89	–	5	1250	
	4	–	–	–	–	–	–	–	–	–	–	199 51 250 CI/4.1	–	397 100 100 CI/4	–	708 174 300 CI/3.9	885 217 900 CI/3.9	–	4	1000	
2 800 000	63	–	–	–	–	–	–	–	24 850 C2I/62	45 000 C2I/65.2	59 600 C2I/65.5	92 500 C2I/64.2	105 500 C2I/63.2	185 000 C2I/62.1	208 000 C2I/63.3	288 000 C2I/65.1	360 000 C2I/65.1	415 900 C2I/64			
	63	1060 ICI/60.1	2 020 ICI/63.6	2430 ICI/63.6	4 220 ICI/66.2	4 960 ICI/66.2	9 000 ICI/61.3	16 350 ICI/62.5	21 400 ICI/62.5	38 700 ICI/62.5	45 200 ICI/64.4	80 000 ICI/62.5	–	–	–	–	–	–			
	56	–	–	–	–	–	–	–	26 300 C2I/55.4	48 300 C2I/57	53 450 C2I/56.8	94 700 C2I/55.5	111 400 C2I/56.9	177 600 C2I/56.1	219 700 C2I/56.6	278 500 C2I/56	346 500 C2I/56	439 300 C2I/57.6			
	50	–	–	–	–	–	–	–	26 200 C2I/50.4	45 650 C2I/52.1	55 650 C2I/52.4	95 150 C2I/53.9	111 300 C2I/53.1	170 500 C2I/52.1	219 300 C2I/53.1	277 800 C2I/51.3	336 900 C2I/51.3	438 700 C2I/50.5			
	50	1280 ICI/49	2 110 ICI/50.9	2 640 ICI/50.9	3 980 ICI/53	4 500 ICI/53	8 950 ICI/49.9	17 800 ICI/50	22 550 ICI/49.3	39 100 ICI/52.5	47 700 ICI/50.8	80 050 ICI/52.5	–	–	–	–	–	–			
	45	–	–	–	–	–	–	–	27 700 C2I/45.1	41 300 C2I/45.6	58 650 C2I/45.4	85 050 C2I/46.6	117 300 C2I/47.8	167 500 C2I/47.1	231 400 C2I/47.5	293 400 C2I/44.2	365 100 C2I/44.2	462 900 C2I/45.4			
	40	–	–	–	–	–	–	–	27 400 C2I/38.7	42 250 C2I/39.5	57 000 C2I/41	85 850 C2I/42.6	120 700 C2I/41.4	172 300 C2I/42.8	238 000 C2I/41.6	301 700 C2I/39.5	375 500 C2I/39.5	476 100 C2I/41			
	40	1360 ICI/38.6	2 130 ICI/40.1	2 670 ICI/40.1	4 490 ICI/41.8	5 200 ICI/41.8	9 680 ICI/39.4	18 750 ICI/39.4	21 800 ICI/40.2	41 250 ICI/41.4	48 250 ICI/41.6	83 800 ICI/41.4	–	–	–	–	–	–			
	35.5	–	–	–	–	–	–	–	29 400 C2I/37.5	43 600 C2I/37.5	62 300 C2I/37.3	88 600 C2I/35.3	122 200 C2I/36.2	177 900 C2I/37.2	245 700 C2I/37.5	311 500 C2I/36.3	387 600 C2I/36.3	491 500 C2I/37.3			
	31.5	–	–	–	–	–	–	–	29 300 C2I/32	53 000 C2I/33.1	62 250 C2I/33.2	100 700 C2I/34.2	124 500 C2I/33.7	212 300 C2I/33.1	245 400 C2I/33.7	320 000 C2I/31.3	398 300 C2I/31.3	504 900 C2I/32.5			
	31.5	1 350 ICI/32.1	1 930 ICI/33	2 350 ICI/33	4 300 ICI/31.4	4 720 ICI/31.4	9 020 ICI/32.8	18 300 ICI/32.4	–	38 600 ICI/31.4	–	79 400 ICI/32.7	–	–	–	–	–	–			
	31.5	–	1800 CI/31.3	2 150 CI/31.3	3750 CI/32.5	4500 CI/32.5	7 220 CI/30.1	14 450 CI/31.3	–	28 550 CI/30.8	–	48 350 CI/30.8	–	99 100 CI/31.7	–	–	–	–			
	28	–	–	–	–	–	–	–	31 050 C2I/28.6	49 800 C2I/28.9	65 700 C2I/28.8	93 450 C2I/29.5	131 400 C2I/30.3	198 900 C2I/29.9	259 200 C2I/30.1	328 500 C2I/28	408 800 C2I/28	518 300 C2I/28.8			
	25	–	–	–	–	–	–	–	29 900 C2I/24.5	47 250 C2I/25.1	62 150 C2I/26	96 000 C2I/27	132 800 C2I/26.3	192 800 C2I/27.2	266 300 C2I/26.4	337 500 C2I/25.1	420 000 C2I/25.1	532 500 C2I/26			
	25	1 120 CI/24.1	2 020 CI/25	2 530 CI/25	4 450 CI/26	5 240 CI/26	8 150 CI/24.1	17 800 CI/25	–	35 300 CI/24.6	–	70 550 CI/24.6	–	144 400 CI/25.4	–	–	–	–			

For n_1 lower than 560 rpm see page 195.

9 - Bevel helical gear reducer selection tables

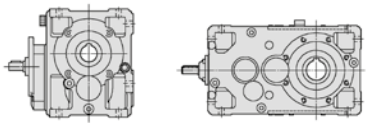

$n_{N2} \cdot L_h$ rpm · h	i_N	50	63	64	80	81	100	125	140	160	180	200	225	250	280	320	321	360	i_N	n_1 rpm	n_{N2}
		Nominal output power P_{N2} [hp] Nominal output torque T_{N2} [lb in] Train of gears / ratio ... / i																			
2 800 000	22.4	–	–	–	–	–	–	–	32 000 C2I/23.8	47 450 C2I/23.8	67 800 C2I/23.7	96 300 C2I/22.4	134 200 C2I/23	193 600 C2I/23.6	267 300 C2I/23.8	339 000 C2I/23	422 000 C2I/23	534 800 C2I/23.7			
	20	–	–	–	–	–	–	–	28 300 C2I/20.4	48 050 C2I/20.6	63 150 C2I/21.4	97 500 C2I/20.5	117 700 C2I/19.9	196 100 C2I/21.5	242 400 C2I/20.8	343 300 C2I/20.6	426 100 C2I/20.6	497 200 C2I/21.4			
	20	1 130 CI/19.3	2 060 CI/20	2 530 CI/20	4 470 CI/20.8	5 260 CI/20.8	9 070 CI/19.3	18 100 CI/20	26 050 CI/20	39 450 CI/19.7	52 050 CI/20.3	81 050 CI/19.7	104 100 CI/20.3	162 100 CI/20.3	205 600 CI/20	265 800 CI/19.7	317 400 CI/19.7	405 600 CI/20.3			
	18	–	–	–	–	–	–	–	26 700 CI/18	42 000 CI/18	55 350 CI/18.7	83 650 CI/18	109 600 CI/18.7	166 400 CI/17.9	211 800 CI/18	256 000 CI/18	323 300 CI/18	429 400 CI/18.4			
	16	1 150 CI/15.2	2 100 CI/15.8	2 580 CI/15.8	4 470 CI/16.4	5 260 CI/16.4	9 210 CI/15.2	18 350 CI/15.8	26 700 CI/15.8	40 050 CI/15.5	56 600 CI/16	82 300 CI/15.5	112 500 CI/16	164 600 CI/16	225 400 CI/15.8	268 300 CI/16.3	334 600 CI/16.3	429 400 CI/16			
	14	–	–	–	–	–	–	–	28 350 CI/14.2	44 300 CI/14.2	58 800 CI/14.7	90 550 CI/14.2	115 700 CI/14.7	181 100 CI/14.1	223 200 CI/14.2	290 400 CI/14.2	344 500 CI/14.2	452 700 CI/14.5			
	12.5	4.7 1 310 CI/12.4	8.44 2 400 CI/12.6	10.7 3 030 CI/12.6	18 5 320 CI/13.1	20.8 6 150 CI/13.1	37.7 10 500 CI/12.4	76.5 21 750 CI/12.6	90 26 050 CI/12.9	157 46 200 CI/13	180 53 050 CI/13.1	315 92 400 CI/13	354 102 400 CI/12.8	– 178 900 CI/12.6	– 205 100 CI/12.9	– 277 400 CI/12.8	– 339 600 CI/12.8	– 399 200 CI/12.6	12.5	2800	**224**
	11.2	–	–	–	–	–	–	–	106 30 050 CI/11.3	143 40 950 CI/11.4	217 63 800 CI/11.7	285 80 950 CI/11.3	430 126 500 CI/11.7	– 163 900 CI/11.4	– 244 000 CI/11.3	– 283 300 CI/11	– 354 100 CI/11	– 462 600 CI/11.5	11.2	2500	
	10	4.39 1 270 CI/10.3	9.12 2 570 CI/10	11.1 3 140 CI/10	18.5 5 420 CI/10.4	21.4 6 280 CI/10.4	39.9 11 000 CI/9.81	78.3 22 050 CI/10	99.1 28 400 CI/10.2	152 44 350 CI/10.3	198 57 900 CI/10.4	304 88 450 CI/10.3	391 111 800 CI/10.2	628 176 600 CI/10▲	781 224 000 CI/10.2▲	– 314 400 CI/10.2	– 385 000 CI/10.2	– 433 000 CI/10	10	2240	
	9	–	–	–	–	–	–	–	106 29 900 CI/9	158 45 100 CI/9.04	211 62 050 CI/9.33	317 89 050 CI/8.93	415 122 200 CI/9.33	633 180 300 CI/9.04	– 235 600 CI/9	– 308 400 CI/8.75	– 384 000 CI/8.75	– 465 700 CI/9.2	9	2000	
	8	4.95 1 360 CI/7.85	9.01 2 530 CI/8	11.4 3 200 CI/8	18.9 5 530 CI/8.33	21.9 6 400 CI/8.33	40.3 11 050 CI/7.85	79.8 22 350 CI/8	96.2 27 450 CI/8.15	154 44 600 CI/8.27	192 55 950 CI/8.31	308 89 050 CI/8.27	379 108 000 CI/8.14	577 165 900 CI/8.21	757 216 200 CI/8.15▲	1 019 279 600 CI/7.83▲	1 269 348 100 CI/7.83▲	– 420 900 CI/8	8	1800	
	6.3	4.09 1 200 CI/6.53	7.22 2 140 CI/6.57	9.15 2 710 CI/6.57	16.4 4 620 CI/6.27	18.3 5 160 CI/6.27	32.3 9 490 CI/6.53	68.4 20 250 CI/6.57	– –	135 38 050 CI/6.27	– –	270 79 350 CI/6.53	– –	539 159 600 CI/6.57	– –	963 271 800 CI/6.27▲	1 204 339 700 CI/6.27▲	– –	6.3	1400	
	5	–	–	–	–	–	–	55.8 15 900 CI/5.06	– –	110 30 350 CI/4.89	– –	220 63 350 CI/5.11	– –	440 125 400 CI/5.06	– –	786 216 200 CI/4.89	982 270 200 CI/4.89	– –	5	1120	
	4	–	–	–	–	–	–	–	– –	– –	– –	180 51 750 CI/4.1	– –	361 101 100 CI/4	– –	643 175 900 CI/3.9	804 219 900 CI/3.9	– –	4	900	
2 500 000	71	–	–	–	–	–	–	–	25 600 C2I/70.2	38 000 C2I/72.3	49 950 C2I/72	77 150 C2I/70.3	108 500 C2I/72.2	154 900 C2I/71.2	214 000 C2I/71.7	271 300 C2I/71.1	337 600 C2I/71.1	428 000 C2I/73.1			
	63	–	–	–	–	–	–	–	25 500 C2I/62	46 200 C2I/65.2	61 650 C2I/65.5	95 000 C2I/64.2	108 300 C2I/63.2	190 000 C2I/62.1	213 500 C2I/63.3	298 000 C2I/65.1	372 500 C2I/65.1	427 000 C2I/64			
	63	1090 ICI/60.1	2 030 ICI/63.6	2 540 ICI/63.6	4 360 ICI/66.2	5 130 ICI/66.2	9 250 ICI/61.3	16 950 ICI/62.5	21 950 ICI/62.5	40 000 ICI/62.5	46 400 ICI/64.4	82 500 ICI/62.5	–	–	–	–	–	–			
	56	–	–	–	–	–	–	–	27 000 C2I/55.4	49 950 C2I/57	55 250 C2I/56.8	97 900 C2I/55.5	114 400 C2I/56.9	183 600 C2I/56.1	225 700 C2I/56.6	286 100 C2I/56	356 000 C2I/56	451 400 C2I/57.6			

For n_1 lower than 560 rpm see page 195.
▲ Possible forced lubrication with heat exchanger: consult us.

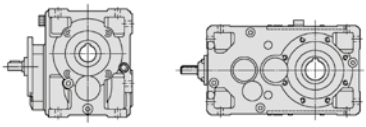

$n_{N2} \cdot L_h$ rpm · h	i_N	50	63	64	80	81	100	125	140	160	180	200	225	250	280	320	321	360	i_N	n_1 rpm	n_{N2}
		Nominal output power P_{N2} [hp] Nominal output torque T_{N2} [lb in] Train of gears / ratio … / i																			
2 500 000	50	–	–	–	–	–	–	–	26 850 C2I/50.4	47 250 C2I/52.1	57 050 C2I/52.4	98 450 C2I/53.9	114 100 C2I/53.1	176 400 C2I/52.1	224 900 C2I/53.1	284 900 C2I/51.3	347 600 C2I/51.3	449 800 C2I/50.5			
	50	1320 ICI/49	2 180 ICI/50.9	2 730 ICI/50.9	4 080 ICI/53	4 620 ICI/53	9 260 ICI/49.9	18 250 ICI/50	23 150 ICI/49.3	40 100 ICI/52.5	48 900 ICI/50.8	82 800 ICI/52.5	–	–	–	–	–	–			
	45	–	–	–	–	–	–	–	28 500 C2I/45.1	42 650 C2I/45.6	60 350 C2I/45.4	87 800 C2I/46.6	120 700 C2I/47.8	172 300 C2I/47.1	238 000 C2I/47.5	301 700 C2I/44.2	375 500 C2I/44.2	476 100 C2I/45.4			
	40	–	–	–	–	–	–	–	28 300 C2I/38.7	43 600 C2I/39.5	58 800 C2I/41	88 600 C2I/42.6	124 600 C2I/41.4	177 900 C2I/42.8	245 700 C2I/41.6	311 500 C2I/39.5	387 600 C2I/39.5	491 500 C2I/41			
	40	1400 ICI/38.6	2 210 ICI/40.1	2 760 ICI/40.1	4 640 ICI/41.8	5 360 ICI/41.8	10 050 ICI/39.4	19 400 ICI/39.4	22 500 ICI/40.2	42 550 ICI/41.4	49 850 ICI/41.6	86 550 ICI/41.4	–	–	–	–	–	–			
	35.5	–	–	–	–	–	–	–	30 250 C2I/37.5	44 800 C2I/37.5	64 000 C2I/37.3	91 050 C2I/35.3	125 500 C2I/36.2	182 800 C2I/37.2	252 500 C2I/37.5	320 000 C2I/36.3	398 300 C2I/36.3	504 900 C2I/37.3			
	31.5	–	–	–	–	–	–	–	30 100 C2I/32	54 500 C2I/33.1	63 900 C2I/33.2	104 400 C2I/34.2	127 800 C2I/33.7	220 100 C2I/33.1	251 900 C2I/33.7	328 500 C2I/31.3	408 800 C2I/31.3	518 300 C2I/32.5			
	31.5	1 400 ICI/32.1	1 980 ICI/33	2 440 ICI/33	4 410 ICI/31.4	4 840 ICI/31.4	9 260 ICI/32.8	18 750 ICI/32.4	–	39 650 ICI/31.4	–	81 500 ICI/32.7	–	–	–	–	–	–			
	31.5	–	1850 CI/31.3	2 150 CI/31.3	3 940 CI/32.5	4620 CI/32.5	7 490 CI/30.1	14 950 CI/31.3	–	29 600 CI/30.8	–	50 100 CI/30.8	–	101 700 CI/31.7	–	–	–	–			
	28	–	–	–	–	–	–	–	31 900 C2I/28.6	51 550 C2I/28.9	67 500 C2I/28.8	96 000 C2I/29.5	135 000 C2I/30.3	206 100 C2I/29.9	266 300 C2I/30.1	337 500 C2I/28	420 000 C2I/28	532 500 C2I/28.8			
	25	–	–	–	–	–	–	–	30 300 C2I/24.5	47 900 C2I/25.1	63 000 C2I/26	97 300 C2I/27	134 600 C2I/26.3	195 400 C2I/27.2	269 900 C2I/26.4	342 100 C2I/25.1	425 800 C2I/25.1	539 800 C2I/26			
	25	1 160 CI/24.1	2 030 CI/25	2 530 CI/25	4 490 CI/26	5 280 CI/26	8 260 CI/24.1	18 050 CI/25	–	35 750 CI/24.6	–	71 550 CI/24.6	–	146 400 CI/25.4	–	–	–	–			
	22.4	–	–	–	–	–	–	–	32 400 C2I/23.8	48 050 C2I/23.8	68 650 C2I/23.7	97 500 C2I/22.4	135 900 C2I/23	196 100 C2I/23.6	270 700 C2I/23.8	343 300 C2I/23	427 400 C2I/23	541 600 C2I/23.7			
	20	–	–	–	–	–	–	–	28 700 C2I/20.4	48 750 C2I/20.6	64 050 C2I/21.4	98 850 C2I/20.5	119 400 C2I/19.9	198 900 C2I/21.5	245 900 C2I/20.8	348 200 C2I/20.6	432 200 C2I/20.6	504 300 C2I/21.4			
	20	1 170 CI/19.3	2 090 CI/20	2 570 CI/20	4 490 CI/20.8	5 280 CI/20.8	9 200 CI/19.3	18 350 CI/20	26 400 CI/20	40 000 CI/19.7	52 800 CI/20.3	82 200 CI/19.7	105 600 CI/20.3	164 400 CI/20.3	208 500 CI/20	269 500 CI/19.7	321 900 CI/19.7	411 300 CI/20.3			
	18	–	–	–	–	–	–	–	27 050 CI/18	42 600 CI/18	56 150 CI/18.7	84 850 CI/18	111 200 CI/18.7	168 800 CI/17.9	214 800 CI/18	259 700 CI/18	327 900 CI/18	435 600 CI/18.4			
	16	1 190 CI/15.2	2 130 CI/15.8	2 620 CI/15.8	4 540 CI/16.4	5 280 CI/16.4	9 340 CI/15.2	18 650 CI/15.8	27 100 CI/15.8	40 650 CI/15.5	57 450 CI/16	83 500 CI/15.5	114 100 CI/16	167 000 CI/16	228 600 CI/15.8	272 200 CI/16.3	339 400 CI/16.3	435 600 CI/16			
									90	141	180	287	354	–	–	–	–	–	14	2800	**200**
	14	–	–	–	–	–	–	–	28 750 CI/14.2	44 950 CI/14.2	59 600 CI/14.7	91 850 CI/14.2	117 400 CI/14.7	183 700 CI/14.1	226 400 CI/14.2	294 500 CI/14.2	349 400 CI/14.2	459 100 CI/14.5			

For n_1 lower than 560 rpm see page 195.
▲ Possible forced lubrication with heat exchanger: consult us.

9 - Bevel helical gear reducer selection tables

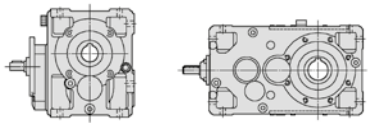

$n_{N2} \cdot L_h$ rpm · h	i_N	50	63	64	80	81	100	125	140	160	180	200	225	250	280	320	321	360	i_N	n_1 rpm	n_{N2}
		Nominal output power P_{N2} [hp] Nominal output torque T_{N2} [lb in] Train of gears / ratio … / i																			
2 500 000	12.5	4.25 1 330 CI/12.4	7.63 2 430 CI/12.6	9.67 3 080 CI/12.6	16.3 5 390 CI/13.1	18.8 6 240 CI/13.1	34.1 10 650 CI/12.4	69.3 22 050 CI/12.6	81.4 26 400 CI/12.9	143 46 850 CI/13	163 53 800 CI/13.1	285 93 650 CI/13	321 103 800 CI/12.8	– 181 300 CI/12.6	– 207 900 CI/12.9	– 281 200 CI/12.8	– 344 300 CI/12.8	– 404 700 CI/12.6	12.5	2500	200
	11.2	–	–	–	–	–	–	–	96.2 30 450 CI/11.3	129 41 500 CI/11.4	197 64 650 CI/11.7	259 82 000 CI/11.3	391 128 200 CI/11.7	517 166 000 CI/11.4	781 247 200 CI/11.3▲	– 287 000 CI/11	– 358 800 CI/11	– 468 700 CI/11.5	11.2	2240	
	10	3.97 1 290 CI/10.3	8.25 2 600 CI/10	10.1 3 180 CI/10	16.7 5 500 CI/10.4	19.4 6 360 CI/10.4	36.1 11 150 CI/9.81	70.9 22 350 CI/10	89.7 28 800 CI/10.2	138 44 950 CI/10.3	179 58 700 CI/10.4	275 89 650 CI/10.3	353 113 400 CI/10.2	568 179 000 CI/10	707 227 000 CI/10.2	– 318 700 CI/10.2	– 390 200 CI/10.2	– 438 900 CI/10	10	2000	
	9	–	–	–	–	–	–	–	96.2 30 300 CI/9	144 45 650 CI/9.04	192 62 850 CI/9.33	288 90 200 CI/8.93	379 123 700 CI/9.33	577 182 600 CI/9.04	757 238 600 CI/9▲	1 019 312 300 CI/8.75▲	1 269 388 900 CI/8.75▲	– 471 600 CI/9.2	9	1800	
	8	4.46 1 380 CI/7.85	8.13 2 560 CI/8	10.3 3 240 CI/8	17.1 5 610 CI/8.33	19.8 6 490 CI/8.33	36.3 11 200 CI/7.85	71.9 22 650 CI/8	86.7 27 850 CI/8.15	139 45 250 CI/8.27	173 56 750 CI/8.31	277 90 300 CI/8.27	341 109 500 CI/8.14	520 168 300 CI/8.21	683 219 300 CI/8.15	919 283 500 CI/7.83	1 144 353 100 CI/7.83	– 426 800 CI/8	8	1600	
	6.3	3.72 1 230 CI/6.53	6.49 2 150 CI/6.57	8.21 2 720 CI/6.57	14.7 4 640 CI/6.27	16.7 5 280 CI/6.27	29 9 540 CI/6.53	61.7 20 450 CI/6.57	–	122 38 500 CI/6.27	–	243 80 150 CI/6.53	–	487 161 200 CI/6.57	–	869 274 500 CI/6.27	1 086 343 100 CI/6.27	–	6.3	1250	
	5	–	–	–	–	–	–	50.4 16 050 CI/5.06	–	99.7 30 700 CI/4.89	–	199 63 950 CI/5.11	–	397 126 600 CI/5.06	–	708 218 300 CI/4.89	885 272 800 CI/4.89	–	5	1000	
	4	–	–	–	–	–	–	–	–	–	–	162 52 250 CI/4.1	–	324 102 100 CI/4	–	577 177 600 CI/3.9	722 222 000 CI/3.9	–	4	800	
2 240 000	80	–	–	–	–	–	–	–	24 850 C2I/78.6	42 000 C2I/82.7	52 750 C2I/83.1	83 400 C2I/81.4	105 500 C2I/80.2	150 700 C2I/78.8	208 000 C2I/80.3	263 400 C2I/82.6	319 500 C2I/82.6	415 900 C2I/81.2			
	80	1060 ICI/75.2	2 040 ICI/79.5	2430 ICI/79.5	3 860 ICI/82.7	4 540 ICI/82.7	8 800 ICI/76.7	14 650 ICI/78.1	18 150 ICI/78.1	31 950 ICI/78.1	36 550 ICI/80.5	65 700 ICI/78.1	–	–	–	–	–	–			
	71	–	–	–	–	–	–	–	26 300 C2I/70.2	39 000 C2I/72.3	51 300 C2I/72	79 200 C2I/70.3	111 400 C2I/72.2	159 000 C2I/71.2	219 700 C2I/71.7	278 500 C2I/71.1	346 500 C2I/71.1	439 300 C2I/73.1			
	63	–	–	–	–	–	–	–	26 200 C2I/62	47 500 C2I/65.2	63 750 C2I/65.5	97 500 C2I/64.2	111 600 C2I/63.2	195 000 C2I/62.1	220 100 C2I/63.3	308 000 C2I/65.1	385 000 C2I/65.1	438 700 C2I/64			
	63	1120 ICI/60.1	2 040 ICI/63.6	2 540 ICI/63.6	4 500 ICI/66.2	5 300 ICI/66.2	9 500 ICI/61.3	17 500 ICI/62.5	22 550 ICI/62.5	41 200 ICI/62.5	47 700 ICI/64.4	85 000 ICI/62.5	–	–	–	–	–	–			
	56	–	–	–	–	–	–	–	27 700 C2I/55.4	50 000 C2I/57	57 150 C2I/56.8	101 300 C2I/55.5	117 300 C2I/56.9	189 900 C2I/56.1	231 400 C2I/56.6	293 400 C2I/56	365 100 C2I/56	462 900 C2I/57.6			
	50	–	–	–	–	–	–	–	27 650 C2I/50.4	48 750 C2I/52.1	58 650 C2I/52.4	101 600 C2I/53.9	117 300 C2I/53.1	182 100 C2I/52.1	231 300 C2I/53.1	293 000 C2I/51.3	358 700 C2I/51.3	462 700 C2I/50.5			
	50	1360 ICI/49	2 250 ICI/50.9	2 810 ICI/50.9	4 200 ICI/53	4 750 ICI/53	9 550 ICI/49.9	18 750 ICI/50	23 800 ICI/49.3	41 250 ICI/52.5	50 300 ICI/50.8	85 450 ICI/52.5	–	–	–	–	–	–			
	45	–	–	–	–	–	–	–	29 400 C2I/45.1	44 200 C2I/45.6	62 300 C2I/45.4	90 950 C2I/46.6	124 600 C2I/47.8	177 900 C2I/47.1	245 700 C2I/47.5	311 500 C2I/44.2	387 600 C2I/44.2	491 500 C2I/45.4			
	40	–	–	–	–	–	–	–	29 050 C2I/38.7	44 800 C2I/39.5	60 450 C2I/41	91 050 C2I/42.6	128 000 C2I/41.4	182 800 C2I/42.8	252 500 C2I/41.6	320 000 C2I/39.5	398 300 C2I/39.5	504 900 C2I/41			

For n_1 lower than 560 rpm see page 195.
▲ Possible forced lubrication with heat exchanger: consult us.

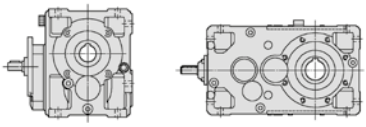

$n_{N2} \cdot L_h$ rpm · h	i_N	50	63	64	80	81	100	125	140	160	180	200	225	250	280	320	321	360	i_N	n_1 rpm	n_{N2}
		Nominal output power P_{N2} [hp]																			
		Nominal output torque T_{N2} [lb in]																			
		Train of gears / ratio ... / i																			
2 240 000	40	1450 ICI/38.6	2 290 ICI/40.1	2 860 ICI/40.1	4 760 ICI/41.8	5 510 ICI/41.8	10 400 ICI/39.4	19 900 ICI/39.4	23 100 ICI/40.2	43 750 ICI/41.4	51 200 ICI/41.6	88 900 ICI/41.4	–	–	–	–	–	–			
	35.5	–	–	–	–	–	–	–	31 050 C2I/37.5	46 000 C2I/37.5	65 700 C2I/37.3	93 450 C2I/35.3	128 800 C2I/36.2	187 600 C2I/37.2	259 200 C2I/37.5	328 500 C2I/36.3	408 800 C2I/36.3	518 300 C2I/37.3			
	31.5	–	–	–	–	–	–	–	30 900 C2I/32	57 300 C2I/33.1	65 850 C2I/33.2	108 100 C2I/34.2	131 300 C2I/33.7	228 000 C2I/33.1	258 800 C2I/33.7	337 500 C2I/31.3	420 000 C2I/31.3	532 500 C2I/32.5			
	31.5	1 450 ICI/32.1	2 030 ICI/33	2 530 ICI/33	4 530 ICI/31.4	4 980 ICI/31.4	9 510 ICI/32.8	19 300 ICI/32.4	–	40 750 ICI/31.4	–	83 700 ICI/32.7	–	–	–	–	–	–			
	31.5	–	1 950 CI/31.3	2 160 CI/31.3	3 950 CI/32.5	4 920 CI/32.5	7 760 CI/30.1	15 500 CI/31.3	–	30 650 CI/30.8	–	51 900 CI/30.8	–	104 500 CI/31.7	–	–	–	–			
	28	–	–	–	–	–	–	–	32 300 C2I/28.6	53 350 C2I/28.9	68 450 C2I/28.8	97 300 C2I/29.5	136 900 C2I/30.3	213 200 C2I/29.9	269 900 C2I/30.1	342 100 C2I/28	425 800 C2I/28	539 800 C2I/28.8			
	25	–	–	–	–	–	–	–	30 650 C2I/24.5	48 500 C2I/25.1	63 800 C2I/26	98 550 C2I/27	136 300 C2I/26.3	200 000 C2I/27.2	273 300 C2I/26.4	346 500 C2I/25.1	431 100 C2I/25.1	546 600 C2I/26			
	25	1 200 CI/24.1	2 030 CI/25	2 540 CI/25	4 500 CI/26	5 290 CI/26	8 360 CI/24.1	18 300 CI/25	–	36 200 CI/24.6	–	72 450 CI/24.6	–	148 200 CI/25.4	–	–	–	–			
	22.4	–	–	–	–	–	–	–	32 850 C2I/23.8	48 750 C2I/23.8	69 650 C2I/23.7	98 850 C2I/22.4	137 800 C2I/23	198 900 C2I/23.6	274 500 C2I/23.8	348 200 C2I/23	433 400 C2I/23	549 200 C2I/23.7			
	20	–	–	–	–	–	–	–	29 100 C2I/20.4	49 450 C2I/20.6	64 950 C2I/21.4	100 300 C2I/20.5	121 100 C2I/19.9	201 700 C2I/21.5	249 400 C2I/20.8	353 200 C2I/20.6	438 400 C2I/20.6	511 500 C2I/21.4			
	20	1 210 CI/19.3	2 120 CI/20	2 600 CI/20	4 500 CI/20.8	5 300 CI/20.8	9 330 CI/19.3	18 600 CI/20	26 800 CI/20	40 550 CI/19.7	53 550 CI/20.3	83 400 CI/19.7	107 100 CI/20.3	166 800 CI/20.3	211 500 CI/20	273 400 CI/19.7	326 500 CI/19.7	417 200 CI/20.3			
	18	–	–	–	–	–	–	–	27 450 CI/18	43 200 CI/18	56 950 CI/18.7	86 100 CI/18	112 800 CI/18.7	171 300 CI/17.9	217 900 CI/18	263 400 CI/18	332 600 CI/18	441 900 CI/18.4			
	16	3.6 1 230 CI/15.2	6.09 2 160 CI/15.8	7.49 2 660 CI/15.8	12.5 4 600 CI/16.4	14.4 5 320 CI/16.4	27.7 9 470 CI/15.2	54 19 200 CI/15.8	77.4 27 500 CI/15.8	118 41 200 CI/15.5	162 58 250 CI/16	242 84 700 CI/15.5	322 115 800 CI/16	– 169 400 CI/16	– 231 900 CI/15.8	– 276 000 CI/16.3	– 344 200 CI/16.3	– 441 800 CI/16	16	2800	**180**
	14	–	–	–	–	–	–	–	81.4 29 150 CI/14.2	127 45 550 CI/14.2	163 60 450 CI/14.7	260 93 100 CI/14.2	321 119 000 CI/14.7	– 186 200 CI/14.1	– 229 500 CI/14.2	– 298 500 CI/14.2	– 354 200 CI/14.2	– 465 400 CI/14.5	14	2500	
	12.5	3.86 1 340 CI/12.4	6.93 2 460 CI/12.6	8.78 3 120 CI/12.6	14.8 5 460 CI/13.1	17.1 6 320 CI/13.1	31 10 800 CI/12.4	62.9 22 350 CI/12.6	73.9 26 750 CI/12.9	129 47 450 CI/13	148 54 500 CI/13.1	259 94 900 CI/13	291 105 200 CI/12.8	517 183 700 CI/12.6	582 210 600 CI/12.9	– 284 900 CI/12.8	– 348 800 CI/12.8	– 410 000 CI/12.6	12.5	2240	
	11.2	–	–	–	–	–	–	–	87 30 850 CI/11.3	117 42 050 CI/11.4	178 65 500 CI/11.7	234 83 100 CI/11.3	353 129 900 CI/11.7	468 168 300 CI/11.4	707 250 600 CI/11.3	836 290 900 CI/11	1 045 363 700 CI/11	– 475 000 CI/11.5	11.2	2000	
	10	3.62 1 310 CI/10.3	7.52 2 630 CI/10	9.19 3 220 CI/10	15.3 5 560 CI/10.4	17.7 6 440 CI/10.4	32.9 11 300 CI/9.81	64.6 22 600 CI/10	81.7 29 150 CI/10.2	126 45 500 CI/10.3	163 59 450 CI/10.4	251 90 750 CI/10.3	322 114 800 CI/10.2	518 181 300 CI/10	644 229 900 CI/10.2	906 322 700 CI/10.2▲	1 110 395 100 CI/10.2▲	1 269 444 400 CI/10▲	10	1800	
	9	–	–	–	–	–	–	–	86.7 30 750 CI/9	130 46 300 CI/9.04	173 63 750 CI/9.33	260 91 450 CI/8.93	341 125 500 CI/9.33	520 185 200 CI/9.04	683 242 000 CI/9	919 316 700 CI/8.75	1 144 394 400 CI/8.75	– 478 300 CI/9.2	9	1600	

For n_1 lower than 560 rpm see page 195.
▲ Possible forced lubrication with heat exchanger: consult us.

9 - Bevel helical gear reducer selection tables

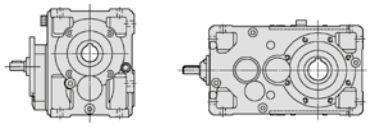

$n_{N2} \cdot L_h$ rpm · h	i_N	50	63	64	80	81	100	125	140	160	180	200	225	250	280	320	321	360	i_N	n_1 rpm	n_{N2}
		Nominal output power P_{N2} [hp] Nominal output torque T_{N2} [lb in] Train of gears / ratio ... / i																			
2 240 000	8	3.97 1 400 CI/7.85	7.22 2 600 CI/8	9.15 3 300 CI/8	15.2 5 700 CI/8.33	17.6 6 600 CI/8.33	32.3 11 400 CI/7.85	63.9 23 000 CI/8	77.1 28 300 CI/8.15	124 45 950 CI/8.27	154 57 650 CI/8.31	247 91 750 CI/8.27	303 111 200 CI/8.14	462 171 000 CI/8.21	607 222 800 CI/8.15	817 288 100 CI/7.83	1 017 358 700 CI/7.83	1 204 433 700 CI/8▲	8	1400	**180**
	6.3	3.44 1 270 CI/6.53	5.84 2 160 CI/6.57	7.38 2 730 CI/6.57	13.2 4 660 CI/6.27	15.5 5 460 CI/6.27	26.1 9 580 CI/6.53	55.8 20 650 CI/6.57	–	110 38 950 CI/6.27	–	220 80 950 CI/6.53	–	440 162 800 CI/6.57	–	786 277 100 CI/6.27	982 346 400 CI/6.27	–	6.3	1120	
	5	–	–	–	–	–	–	45.8 16 200 CI/5.06	–	90.7 31 050 CI/4.89	–	180 64 550 CI/5.11	–	361 127 800 CI/5.06	–	643 220 200 CI/4.89	804 275 300 CI/4.89	–	5	900	
	4	–	–	–	–	–	–	–	–	–	–	145 52 800 CI/4.1	–	290 103 200 CI/4	–	518 179 400 CI/3.9	647 224 200 CI/3.9	–	4	710	
2 000 000	90	–	–	–	–	–	–	–	25 600 C2I/87.8	41 400 C2I/90.4	50 550 C2I/90	80 900 C2I/87.9	108 500 C2I/90.3	154 900 C2I/89	214 000 C2I/89.7	271 300 C2I/88.8	337 600 C2I/88.8	428 000 C2I/91.4			
	80	–	–	–	–	–	–	–	25 500 C2I/78.6	43 450 C2I/82.7	54 150 C2I/83.1	86 300 C2I/81.4	108 300 C2I/80.2	154 700 C2I/78.8	213 500 C2I/80.3	270 400 C2I/82.6	328 000 C2I/82.6	427 000 C2I/81.2			
	80	1090 ICI/75.2	2 040 ICI/79.5	2 550 ICI/79.5	3 990 ICI/82.7	4 700 ICI/82.7	9 100 ICI/76.7	15 050 ICI/78.1	18 650 ICI/78.1	32 800 ICI/78.1	37 750 ICI/80.5	67 450 ICI/78.1	–	–	–	–	–	–			
	71	–	–	–	–	–	–	–	27 000 C2I/70.2	40 050 C2I/72.3	52 700 C2I/72	81 400 C2I/70.3	114 400 C2I/72.2	163 400 C2I/71.2	225 700 C2I/71.7	286 100 C2I/71.1	356 000 C2I/71.1	451 400 C2I/73.1			
	63	–	–	–	–	–	–	–	26 850 C2I/62	48 700 C2I/65.2	65 950 C2I/65.5	100 000 C2I/64.2	115 500 C2I/63.2	200 000 C2I/62.1	227 700 C2I/63.3	318 600 C2I/65.1	398 300 C2I/65.1	449 800 C2I/64			
	63	1150 ICI/60.1	2 040 ICI/63.6	2 550 ICI/63.6	4 520 ICI/66.2	5 320 ICI/66.2	9 750 ICI/61.3	18 100 ICI/62.5	23 150 ICI/62.5	42 500 ICI/62.5	48 900 ICI/64.4	87 500 ICI/62.5	–	–	–	–	–	–			
	56	–	–	–	–	–	–	–	28 500 C2I/55.4	51 500 C2I/57	59 000 C2I/56.8	104 500 C2I/55.5	120 700 C2I/56.9	196 000 C2I/56.1	238 000 C2I/56.6	301 700 C2I/56	375 500 C2I/56	476 100 C2I/57.6			
	50	–	–	–	–	–	–	–	28 500 C2I/50.4	50 500 C2I/52.1	60 550 C2I/52.4	105 300 C2I/53.9	121 100 C2I/53.1	188 600 C2I/52.1	238 800 C2I/53.1	302 500 C2I/51.3	371 600 C2I/51.3	477 600 C2I/50.5			
	50	1 390 ICI/49	2 330 ICI/50.9	2 900 ICI/50.9	4 340 ICI/53	4 900 ICI/53	9 900 ICI/49.9	19 400 ICI/50	24 550 ICI/49.3	42 550 ICI/52.5	51 900 ICI/50.8	88 550 ICI/52.5	–	–	–	–	–	–			
	45	–	–	–	–	–	–	–	30 250 C2I/45.1	45 800 C2I/45.6	64 000 C2I/45.4	94 250 C2I/46.6	128 000 C2I/47.8	182 800 C2I/47.1	252 500 C2I/47.5	320 000 C2I/44.2	398 300 C2I/44.2	504 900 C2I/45.4			
	40	–	–	–	–	–	–	–	29 850 C2I/38.7	46 000 C2I/39.5	62 050 C2I/41	93 450 C2I/42.6	131 400 C2I/41.4	187 600 C2I/42.8	259 200 C2I/41.6	328 500 C2I/39.5	408 800 C2I/39.5	518 300 C2I/41			
	40	1450 ICI/38.6	2 370 ICI/40.1	2 970 ICI/40.1	4 890 ICI/41.8	5 660 ICI/41.8	10 750 ICI/39.4	20 450 ICI/39.4	23 750 ICI/40.2	44 900 ICI/41.4	52 550 ICI/41.6	91 250 ICI/41.4	–	–	–	–	–	–			
	35.5	–	–	–	–	–	–	–	31 900 C2I/37.5	47 250 C2I/37.5	67 500 C2I/37.3	96 000 C2I/35.3	132 400 C2I/36.2	192 800 C2I/37.2	266 300 C2I/37.5	337 500 C2I/36.3	420 000 C2I/36.3	532 500 C2I/37.3			
	31.5	–	–	–	–	–	–	–	31 300 C2I/32	57 500 C2I/33.1	68 100 C2I/33.2	111 900 C2I/34.2	133 000 C2I/33.7	229 200 C2I/33.1	262 300 C2I/33.7	342 100 C2I/31.3	425 800 C2I/31.3	539 800 C2I/32.5			

For n_1 lower than 560 rpm see page 195.

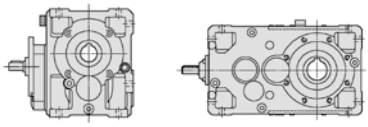

$n_{N2} \cdot L_h$ rpm · h	i_N	50	63	64	80	81	100	125	140	160	180	200	225	250	280	320	321	360	i_N	n_1 rpm	n_{N2}
		Nominal output power P_{N2} [hp] Nominal output torque T_{N2} [lb in] Train of gears / ratio … / i																			
2 000 000	31.5	1 500 ICI/32.1	2 090 ICI/33	2 610 ICI/33	4 600 ICI/31.4	5 050 ICI/31.4	9 640 ICI/32.8	19 550 ICI/32.4	–	41 300 ICI/31.4	–	84 850 ICI/32.7	–	–	–	–	–	–			
	31.5	–	1 950 CI/31.3	2 170 CI/31.3	3 970 CI/32.5	4 940 CI/32.5	8 030 CI/30.1	16 050 CI/31.3	–	31 700 CI/30.8	–	53 700 CI/30.8	–	105 900 CI/31.7	–	–	–	–			
	28	–	–	–	–	–	–	–	32 700 C2I/28.6	55 050 C2I/28.9	69 300 C2I/28.8	99 750 C2I/29.5	138 600 C2I/30.3	220 000 C2I/29.9	273 300 C2I/30.1	346 500 C2I/28	431 100 C2I/28	546 600 C2I/28.8			
	25	–	–	–	–	–	–	–	31 100 C2I/24.5	49 450 C2I/25.1	64 700 C2I/26	99 950 C2I/27	138 200 C2I/26.3	207 200 C2I/27.2	277 200 C2I/26.4	351 400 C2I/25.1	437 300 C2I/25.1	554 400 C2I/26			
	25	1 240 CI/24.1	2 040 CI/25	2 550 CI/25	4 520 CI/26	5 310 CI/26	8 500 CI/24.1	18 550 CI/25	–	36 750 CI/24.6	–	73 450 CI/24.6	–	150 300 CI/25.4	–	–	–	–			
	22.4	–	–	–	–	–	–	–	33 300 C2I/23.8	49 450 C2I/23.8	70 650 C2I/23.7	100 300 C2I/22.4	139 800 C2I/23	201 700 C2I/23.6	278 500 C2I/23.8	353 200 C2I/23	439 600 C2I/23	557 100 C2I/23.7			
	20	–	–	–	–	–	–	–	29 500 C2I/20.4	50 150 C2I/20.6	65 900 C2I/21.4	101 700 C2I/20.5	122 800 C2I/19.9	204 600 C2I/21.5	253 000 C2I/20.8	358 200 C2I/20.6	444 700 C2I/20.6	518 900 C2I/21.4			
	20	1 250 CI/19.3	2 150 CI/20	2 640 CI/20	4 570 CI/20.8	5 320 CI/20.8	9 460 CI/19.3	18 850 CI/20	27 150 CI/20	41 150 CI/19.7	54 300 CI/20.3	84 600 CI/19.7	108 600 CI/20.3	169 200 CI/20.3	214 500 CI/20	277 300 CI/19.7	334 500 CI/19.7	423 200 CI/20.3			
	18	–	–	–	–	–	–	–	68.7 27 850 CI/18	108 43 850 CI/18	137 57 750 CI/18.7	215 87 300 CI/18	272 114 400 CI/18.7	– 173 700 CI/17.9	– 221 000 CI/18	– 267 200 CI/18	– 337 300 CI/18	– 448 100 CI/18.4	18	2800	160
	16	3.32 1 270 CI/15.2	5.51 2 190 CI/15.8	6.78 2 690 CI/15.8	11.3 4 660 CI/16.4	13 5 390 CI/16.4	25.1 9 600 CI/15.2	49.9 19 850 CI/15.8	70.1 27 850 CI/15.8	107 41 750 CI/15.5	146 59 050 CI/16	219 85 850 CI/15.5	291 117 300 CI/16	– 171 700 CI/16	– 235 000 CI/15.8	– 279 800 CI/16.3	– 348 900 CI/16.3	– 447 800 CI/16	16	2500	
	14	–	–	–	–	–	–	–	73.9 29 500 CI/14.2	116 46 150 CI/14.2	148 61 250 CI/14.7	236 94 300 CI/14.2	291 120 500 CI/14.7	476 188 600 CI/14.1	582 232 500 CI/14.2	– 302 400 CI/14.2	– 358 900 CI/14.2	– 471 500 CI/14.5	14	2240	
	12.5	3.49 1 360 CI/12.4	6.27 2 490 CI/12.6	7.94 3 160 CI/12.6	13.4 5 530 CI/13.1	15.5 6 410 CI/13.1	28 10 900 CI/12.4	56.9 22 650 CI/12.6	66.9 27 100 CI/12.9	117 48 100 CI/13	134 55 250 CI/13.1	234 96 200 CI/13	263 106 600 CI/12.8	468 186 200 CI/12.6	527 213 500 CI/12.9	714 288 800 CI/12.8	875 353 600 CI/12.8	1 045 415 600 CI/12.6	12.5	2000	
	11.2	–	–	–	–	–	–	–	79.3 31 250 CI/11.3	107 42 600 CI/11.4	162 66 350 CI/11.7	213 84 150 CI/11.3	322 131 600 CI/11.7	427 170 400 CI/11.4	644 253 800 CI/11.3	762 294 600 CI/11	953 368 300 CI/11	1 195 481 100 CI/11.5▲	11.2	1800	
	10	3.26 1 320 CI/10.3	6.78 2 670 CI/10	8.29 3 270 CI/10	13.8 5 640 CI/10.4	15.9 6 530 CI/10.4	29.7 11 450 CI/9.81	58.2 22 950 CI/10	73.7 29 600 CI/10.2	113 46 150 CI/10.3	147 60 300 CI/10.4	226 92 050 CI/10.3	290 116 400 CI/10.2	467 183 800 CI/10	581 233 200 CI/10.2	817 327 300 CI/10.2	1 001 400 700 CI/10.2	1 144 450 700 CI/10	10	1600	
	9	–	–	–	–	–	–	–	77.1 31 250 CI/9	116 47 050 CI/9.04	154 64 750 CI/9.33	231 92 950 CI/8.93	303 127 500 CI/9.33	462 188 200 CI/9.04	607 245 900 CI/9	817 321 800 CI/8.75	1 017 400 700 CI/8.75	1 173 486 000 CI/9.2▲	9	1400	
	8	3.56 1 410 CI/7.85	6.49 2 620 CI/8	8.2 3 310 CI/8	13.6 5 720 CI/8.33	15.7 6 620 CI/8.33	29 11 450 CI/7.85	57.4 23 150 CI/8	69.5 28 600 CI/8.15	111 46 450 CI/8.27	139 58 250 CI/8.31	222 92 650 CI/8.27	274 112 400 CI/8.14	417 172 600 CI/8.21	548 225 100 CI/8.15	736 290 800 CI/7.83	918 362 800 CI/7.83	1 086 438 000 CI/8	8	1250	
	6.3	3.18 1 310 CI/6.53	5.24 2 170 CI/6.57	6.62 2 740 CI/6.57	11.9 4 690 CI/6.27	14.3 5 650 CI/6.27	23.4 9 630 CI/6.53	50.4 20 850 CI/6.57	–	99.7 39 400 CI/6.27	–	199 81 750 CI/6.53	–	397 164 500 CI/6.57	–	708 279 800 CI/6.27	885 349 700 CI/6.27	–	6.3	1000	
	5	–	–	–	–	–	–	41.4 16 500 CI/5.06	–	81.6 31 400 CI/4.89	–	162 65 250 CI/5.11	–	324 129 100 CI/5.06	–	577 222 400 CI/4.89	722 278 000 CI/4.89	–	5	800	

For n_1 lower than 560 rpm see page 195.

9 - Bevel helical gear reducer selection tables

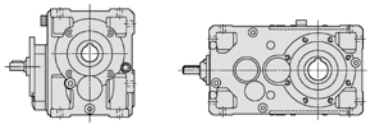

$n_{N2} \cdot L_h$ rpm · h	i_N	50	63	64	80	81	100	125	140	160	180	200	225	250	280	320	321	360	i_N	n_1 rpm	n_{N2} rpm
		Nominal output power P_{N2} [hp] Nominal output torque T_{N2} [lb in] Train of gears / ratio … / i																			
2 000 000	4	–	–	–	–	–	–	–	–	–	–	130 53 350 CI/4.1	–	260 104 200 CI/4	–	461 180 000 CI/3.9	580 226 500 CI/3.9	–	4	630	**160**
1 800 000	100	–	–	–	–	–	–	–	24 850 C2I/98.2	45 000 C2I/103	52 850 C2I/104	93 600 C2I/102	105 500 C2I/100	153 400 C2I/98.5	208 000 C2I/100	275 700 C2I/103	344 600 C2I/103	415 900 C2I/102			
	100	–	1700 ICI/99.4	2060 ICI/99.4	3650 ICI/103	4000 ICI/103	9 780 ICI/100	17 200 ICI/102	21 400 ICI/100	43 650 ICI/106	51 500 ICI/102	92 500 ICI/106	–	–	–	–	–	–			
	90	–	–	–	–	–	–	–	26 300 C2I/87.8	42 850 C2I/90.4	51 850 C2I/90	83 700 C2I/87.9	111 400 C2I/90.3	159 000 C2I/89	219 700 C2I/89.7	278 500 C2I/88.8	346 500 C2I/88.8	439 300 C2I/91.4			
	80	–	–	–	–	–	–	–	26 200 C2I/78.6	44 900 C2I/82.7	55 650 C2I/83.1	89 200 C2I/81.4	111 300 C2I/80.2	158 900 C2I/78.8	219 300 C2I/80.3	277 800 C2I/82.6	336 900 C2I/82.6	438 700 C2I/81.2			
	80	1120 ICI/75.2	2 050 ICI/79.5	2 560 ICI/79.5	4 120 ICI/82.7	4 850 ICI/82.7	9 410 ICI/76.7	15 450 ICI/78.1	19 150 ICI/78.1	33 700 ICI/78.1	39 000 ICI/80.5	69 300 ICI/78.1	–	–	–	–	–	–			
	71	–	–	–	–	–	–	–	27 700 C2I/70.2	41 050 C2I/72.3	54 050 C2I/72	83 450 C2I/70.3	117 300 C2I/72.2	167 500 C2I/71.2	231 400 C2I/71.7	293 400 C2I/71.1	365 100 C2I/71.1	462 900 C2I/73.1			
	63	–	–	–	–	–	–	–	27 650 C2I/62	50 000 C2I/65.2	68 050 C2I/65.5	103 000 C2I/64.2	119 200 C2I/63.2	206 000 C2I/62.1	235 000 C2I/63.3	328 800 C2I/65.1	411 100 C2I/65.1	462 700 C2I/64			
	63	1180 ICI/60.1	2 050 ICI/63.6	2 560 ICI/63.6	4 530 ICI/66.2	5 330 ICI/66.2	10 000 ICI/61.3	18 700 ICI/62.5	23 800 ICI/62.5	43 700 ICI/62.5	50 300 ICI/64.4	90 000 ICI/62.5	–	–	–	–	–	–			
	56	–	–	–	–	–	–	–	29 400 C2I/55.4	53 000 C2I/57	61 100 C2I/56.8	108 300 C2I/55.5	124 600 C2I/56.9	203 100 C2I/56.1	245 700 C2I/56.6	311 500 C2I/56	387 600 C2I/56	491 500 C2I/57.6			
	50	–	–	–	–	–	–	–	29 300 C2I/50.4	52 350 C2I/52.1	62 250 C2I/52.4	109 100 C2I/53.9	124 500 C2I/53.1	195 500 C2I/52.1	245 400 C2I/53.1	310 800 C2I/51.3	385 200 C2I/51.3	490 700 C2I/50.5			
	50	1 390 ICI/49	2 420 ICI/50.9	2 910 ICI/50.9	4 460 ICI/53	5 040 ICI/53	10 250 ICI/49.9	19 900 ICI/50	25 250 ICI/49.3	43 750 ICI/52.5	53 350 ICI/50.8	91 750 ICI/52.5	–	–	–	–	–	–			
	45	–	–	–	–	–	–	–	31 050 C2I/45.1	47 450 C2I/45.6	65 700 C2I/45.4	97 700 C2I/46.6	131 400 C2I/47.8	187 600 C2I/47.1	259 200 C2I/47.5	328 500 C2I/44.2	408 800 C2I/44.2	518 300 C2I/45.4			
	40	–	–	–	–	–	–	–	30 650 C2I/38.7	47 250 C2I/39.5	63 750 C2I/41	96 000 C2I/42.6	135 000 C2I/41.4	192 800 C2I/42.8	266 300 C2I/41.6	337 500 C2I/39.5	420 000 C2I/39.5	532 500 C2I/41			
	40	1 520 ICI/38.6	2 460 ICI/40.1	3 070 ICI/40.1	5 030 ICI/41.8	5 810 ICI/41.8	11 150 ICI/39.4	21 000 ICI/39.4	24 400 ICI/40.2	46 150 ICI/41.4	54 000 ICI/41.6	93 750 ICI/41.4	–	–	–	–	–	–			
	35.5	–	–	–	–	–	–	–	32 300 C2I/37.5	47 900 C2I/37.5	68 450 C2I/37.3	97 300 C2I/35.3	134 200 C2I/36.2	195 400 C2I/37.2	269 900 C2I/37.5	342 100 C2I/36.3	425 800 C2I/36.3	539 800 C2I/37.3			
	31.5	–	–	–	–	–	–	–	31 700 C2I/32	57 700 C2I/33.1	70 300 C2I/33.2	114 600 C2I/34.2	134 700 C2I/33.7	230 000 C2I/33.1	265 600 C2I/33.7	346 500 C2I/31.3	431 100 C2I/31.3	546 600 C2I/32.5			
	31.5	1500 ICI/32.1	2 160 ICI/33	2 700 ICI/33	4 650 ICI/31.4	5 110 ICI/31.4	9 920 ICI/32.8	19 800 ICI/32.4	–	41 800 ICI/31.4	–	85 950 ICI/32.7	–	–	–	–	–	–			

For n_1 lower than 560 rpm see page 195.

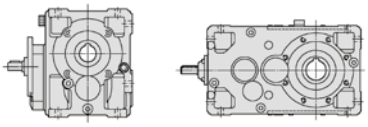

$n_{N2} \cdot L_h$ rpm · h	i_N	50	63	64	80	81	100	125	140	160	180	200	225	250	280	320	321	360	i_N	n_1 rpm	n_{N2}
		Nominal output power P_{N2} [hp] Nominal output torque T_{N2} [lb in] Train of gears / ratio … / i																			
1 800 000	31.5	–	1 960 CI/31.3	2 180 CI/31.3	3 980 CI/32.5	4 950 CI/32.5	8 280 CI/30.1	16 550 CI/31.3	–	32 750 CI/30.8	–	55 450 CI/30.8	–	107 800 CI/31.7	–	–	–	–			
	28	–	–	–	–	–	–	–	33 200 C2I/28.6	57 050 C2I/28.9	70 250 C2I/28.8	103 400 C2I/29.5	140 500 C2I/30.3	228 000 C2I/29.9	277 200 C2I/30.1	351 400 C2I/28	437 300 C2I/28	554 400 C2I/28.8			
	25	–	–	–	–	–	–	–	31 550 C2I/24.5	51 250 C2I/25.1	65 600 C2I/26	101 400 C2I/27	140 200 C2I/26.3	214 700 C2I/27.2	281 200 C2I/26.4	356 400 C2I/25.1	443 500 C2I/25.1	562 300 C2I/26			
	25	1 290 CI/24.1	2 050 CI/25	2 560 CI/25	4 530 CI/26	5 330 CI/26	8 810 CI/24.1	18 800 CI/25	–	37 250 CI/24.6	–	74 500 CI/24.6	–	152 500 CI/25.4	–	–	–	–			
	22.4	–	–	–	–	–	–	–	33 800 C2I/23.8	50 350 C2I/23.8	71 650 C2I/23.7	101 700 C2I/22.4	141 800 C2I/23	204 600 C2I/23.6	282 500 C2I/23.8	358 200 C2I/23	445 900 C2I/23	565 100 C2I/23.7			
	20	–	–	–	–	–	–	–	65.2 29 950 C2I/20.4	110 50 850 C2I/20.6	139 66 800 C2I/21.4	224 103 200 C2I/20.5▲	278 124 600 C2I/19.9▲	– 207 500 C2I/21.5	– 256 600 C2I/20.8	– 363 300 C2I/20.6	– 451 000 C2I/20.6	– 526 200 C2I/21.4	20	2800	140
	20	2.97 1 290 CI/19.3	4.83 2 180 CI/20	5.95 2 680 CI/20	9.9 4 630 CI/20.8	11.4 5 350 CI/20.8	22.1 9 600 CI/19.3	42.5 19 150 CI/20	61.2 27 550 CI/20	94.1 41 750 CI/19.7	121 55 050 CI/20.3	193 85 750 CI/19.7	241 110 100 CI/20.3	– 171 500 CI/20.3	– 217 600 CI/20	– 281 300 CI/19.7	– 346 500 CI/19.7	– 429 200 CI/20.3	20	2800	
	18	–	–	–	–	–	–	–	62.2 28 250 CI/18	97.9 44 450 CI/18	124 58 550 CI/18.7	195 88 500 CI/18	246 116 000 CI/18.7	– 176 100 CI/17.9	– 224 000 CI/18	– 270 800 CI/18	– 341 900 CI/18	– 454 200 CI/18.4	18	2500	
	16	3.02 1 290 CI/15.2	5 2 220 CI/15.8	6.15 2 730 CI/15.8	10.2 4 720 CI/16.4	11.8 5 460 CI/16.4	22.8 9 730 CI/15.2	46.2 20 500 CI/15.8	63.6 28 250 CI/15.8	96.9 42 300 CI/15.5	133 59 800 CI/16	199 86 950 CI/15.5	264 118 900 CI/16	386 173 900 CI/16	537 238 100 CI/15.8	– 283 500 CI/16.3	– 353 500 CI/16.3	– 453 700 CI/16	16	2240	
	14	–	–	–	–	–	–	–	66.9 29 900 CI/14.2	105 46 750 CI/14.2	134 62 050 CI/14.7	214 95 600 CI/14.2	263 122 200 CI/14.7	431 191 200 CI/14.1	527 235 600 CI/14.2	685 306 500 CI/14.2	813 363 700 CI/14.2	1 045 477 900 CI/14.5	14	2000	
	12.5	3.18 1 380 CI/12.4	5.72 2 530 CI/12.6	7.24 3 200 CI/12.6	12.2 5 600 CI/13.1	14.1 6 490 CI/13.1	25.5 11 050 CI/12.4	51.9 22 900 CI/12.6	61 27 450 CI/12.9	107 48 700 CI/13	122 55 950 CI/13.1	213 97 400 CI/13	242 108 700 CI/12.8	427 188 500 CI/12.6	480 216 200 CI/12.9	651 292 400 CI/12.8	797 358 000 CI/12.8	953 420 900 CI/12.6	12.5	1800	
	11.2	–	–	–	–	–	–	–	71.5 31 700 CI/11.3	96.2 43 200 CI/11.4	146 67 300 CI/11.7	192 85 350 CI/11.3	290 133 500 CI/11.7	385 172 800 CI/11.4	581 257 400 CI/11.3	687 298 800 CI/11	859 373 500 CI/11	1 077 487 900 CI/11.5	11.2	1600	
	10	2.9 1 350 CI/10.3	6.03 2 710 CI/10	7.37 3 320 CI/10	12.2 5 730 CI/10.4	14.2 6 640 CI/10.4	26.4 11 650 CI/9.81	51.8 23 300 CI/10	65.5 30 050 CI/10.2	101 46 900 CI/10.3	131 61 250 CI/10.4	201 93 550 CI/10.3	258 118 300 CI/10.2	415 186 800 CI/10	516 236 900 CI/10.2	727 332 500 CI/10.2	890 407 200 CI/10.2	1 017 458 000 CI/10	10	1400	
	9	–	–	–	–	–	–	–	69.5 31 550 CI/9	104 47 550 CI/9.04	139 65 450 CI/9.33	208 93 850 CI/8.93	274 128 800 CI/9.33	417 190 000 CI/9.04	548 248 500 CI/9	736 324 800 CI/8.75	918 405 200 CI/8.75	1 058 490 900 CI/9.2	9	1250	
	8	3.2 1 410 CI/7.85	5.84 2 630 CI/8	7.37 3 320 CI/8	12.2 5 730 CI/8.33	14.2 6 640 CI/8.33	26.1 11 500 CI/7.85	51.8 23 300 CI/8	62.9 28 850 CI/8.15	101 46 900 CI/8.27	126 58 800 CI/8.31	203 94 600 CI/8.27	248 113 500 CI/8.14	377 174 200 CI/8.21	496 227 400 CI/8.15	666 293 400 CI/7.83	832 366 700 CI/7.83	982 442 200 CI/8	8	1120	
	6.3	2.96 1 350 CI/6.53	4.84 2 230 CI/6.57	6.06 2 790 CI/6.57	10.7 4 710 CI/6.27	13.3 5 830 CI/6.27	21.1 9 670 CI/6.53	45.8 21 050 CI/6.57	–	90.7 39 800 CI/6.27	–	180 82 550 CI/6.53	–	361 166 000 CI/6.57	–	643 282 300 CI/6.27	804 352 800 CI/6.27	–	6.3	900	
	5	–	–	–	–	–	–	38.1 17 100 CI/5.06	–	73.2 31 800 CI/4.89	–	148 67 050 CI/5.11	–	290 130 500 CI/5.06	–	518 224 600 CI/4.89	647 280 800 CI/4.89	–	5	710	
	4	–	–	–	–	–	–	–	–	–	–	117 53 900 CI/4.1	–	234 105 300 CI/4	–	410 180 000 CI/3.9	520 228 600 CI/3.9	–	4	560	

For n_1 lower than 560 rpm see page 195.
▲ Possible forced lubrication with heat exchanger: consult us.

9 - Bevel helical gear reducer selection tables

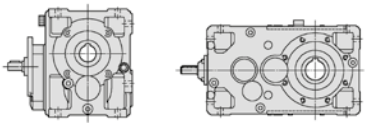

$n_{N2} \cdot L_h$ rpm · h	i_N	50	63	64	80	81	100	125	140	160	180	200	225	250	280	320	321	360	i_N	n_1 rpm	n_{N2} rpm
		Nominal output power P_{N2} [hp] Nominal output torque T_{N2} [lb in] Train of gears / ratio ... / i																			
1 600 000	100	–	–	–	–	–	–	–	25 500 C2I/98.2	46 200 C2I/103	54 700 C2I/104	95 000 C2I/102	108 300 C2I/100	158 700 C2I/98.5	213 500 C2I/100	285 200 C2I/103	356 500 C2I/103	427 000 C2I/102			
	100	–	1750 ICI/99.4	2120 ICI/99.4	3750 ICI/103	4120 ICI/103	10 100 ICI/100	17 800 ICI/102	21 950 ICI/100	45 150 ICI/106	51 500 ICI/102	95 000 ICI/106	–	–	–	–	–	–			
	90	–	–	–	–	–	–	–	27 000 C2I/87.8	44 250 C2I/90.4	53 300 C2I/90	86 500 C2I/87.9	114 400 C2I/90.3	163 400 C2I/89	225 700 C2I/89.7	286 100 C2I/88.8	356 000 C2I/88.8	451 400 C2I/91.4			
	80	–	–	–	–	–	–	–	26 850 C2I/78.6	46 450 C2I/82.7	57 050 C2I/83.1	92 250 C2I/81.4	114 100 C2I/80.2	163 000 C2I/78.8	224 900 C2I/80.3	284 900 C2I/82.6	345 500 C2I/82.6	449 800 C2I/81.2			
	80	1150 ICI/75.2	2 060 ICI/79.5	2 570 ICI/79.5	4 270 ICI/82.7	5 020 ICI/82.7	9 730 ICI/76.7	15 900 ICI/78.1	19 650 ICI/78.1	34 550 ICI/78.1	40 350 ICI/80.5	71 050 ICI/78.1	–	–	–	–	–	–			
	71	–	–	–	–	–	–	–	28 500 C2I/70.2	42 250 C2I/72.3	55 550 C2I/72	85 850 C2I/70.3	120 700 C2I/72.2	172 300 C2I/71.2	238 000 C2I/71.7	301 700 C2I/71.1	375 500 C2I/71.1	476 100 C2I/73.1			
	63	–	–	–	–	–	–	–	28 500 C2I/62	51 500 C2I/65.2	70 500 C2I/65.5	106 000 C2I/64.2	123 500 C2I/63.2	212 000 C2I/62.1	243 500 C2I/63.3	340 700 C2I/65.1	425 800 C2I/65.1	477 600 C2I/64			
	63	1220 ICI/60.1	2 060 ICI/63.6	2 570 ICI/63.6	4 550 ICI/66.2	5 350 ICI/66.2	10 300 ICI/61.3	19 350 ICI/62.5	24 550 ICI/62.5	45 000 ICI/62.5	51 900 ICI/64.4	92 500 ICI/62.5	–	–	–	–	–	–			
	56	–	–	–	–	–	–	–	30 250 C2I/55.4	54 500 C2I/57	63 350 C2I/56.8	112 200 C2I/55.5	128 000 C2I/56.9	210 500 C2I/56.1	252 500 C2I/56.6	320 000 C2I/56	398 300 C2I/56	504 900 C2I/57.6			
	50	–	–	–	–	–	–	–	30 100 C2I/50.4	54 250 C2I/52.1	63 900 C2I/52.4	113 100 C2I/53.9	127 800 C2I/53.1	202 600 C2I/52.1	251 900 C2I/53.1	319 400 C2I/51.3	399 200 C2I/51.3	503 700 C2I/50.5			
	50	1 400 ICI/49	2 490 ICI/50.9	2 920 ICI/50.9	4 570 ICI/53	5 170 ICI/53	10 650 ICI/49.9	20 450 ICI/50	25 900 ICI/49.3	44 900 ICI/52.5	54 750 ICI/50.8	95 100 ICI/52.5	–	–	–	–	–	–			
	45	–	–	–	–	–	–	–	31 900 C2I/45.1	49 200 C2I/45.6	67 500 C2I/45.4	101 200 C2I/46.6	135 000 C2I/47.8	192 800 C2I/47.1	266 300 C2I/47.5	337 500 C2I/44.2	420 000 C2I/44.2	532 500 C2I/45.4			
	40	–	–	–	–	–	–	–	31 050 C2I/38.7	47 900 C2I/39.5	64 600 C2I/41	97 300 C2I/42.6	136 900 C2I/41.4	195 400 C2I/42.8	269 900 C2I/41.6	342 100 C2I/39.5	425 800 C2I/39.5	539 800 C2I/41			
	40	1 530 ICI/38.6	2 530 ICI/40.1	3 170 ICI/40.1	5 090 ICI/41.8	5 890 ICI/41.8	11 550 ICI/39.4	21 300 ICI/39.4	24 700 ICI/40.2	47 750 ICI/41.4	54 750 ICI/41.6	96 950 ICI/41.4	–	–	–	–	–	–			
	35.5	–	–	–	–	–	–	–	32 700 C2I/37.5	48 500 C2I/37.5	69 300 C2I/37.3	98 550 C2I/35.3	135 900 C2I/36.2	197 900 C2I/37.2	273 300 C2I/37.5	346 500 C2I/36.3	431 100 C2I/36.3	546 600 C2I/37.3			
	31.5	–	–	–	–	–	–	–	32 150 C2I/32	57 900 C2I/33.1	72 850 C2I/33.2	115 100 C2I/34.2	136 600 C2I/33.7	230 900 C2I/33.1	269 400 C2I/33.7	351 400 C2I/31.3	437 300 C2I/31.3	554 400 C2I/32.5			
	31.5	1500 ICI/32.1	2 240 ICI/33	2 790 ICI/33	4 720 ICI/31.4	5 180 ICI/31.4	10 300 ICI/32.8	20 050 ICI/32.4	–	42 400 ICI/31.4	–	87 150 ICI/32.7	–	–	–	–	–	–			
	31.5	–	1 970 CI/31.3	2 190 CI/31.3	4 000 CI/32.5	4 970 CI/32.5	8 580 CI/30.1	16 500 CI/31.3	–	32 500 CI/30.8	–	57 450 CI/30.8	–	111 700 CI/31.7	–	–	–	–			

For n_1 lower than 560 rpm see page 195.

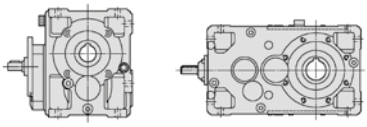

$n_{N2} \cdot L_h$ rpm · h	i_N	50	63	64	80	81	100	125	140	160	180	200	225	250	280	320	321	360	i_N	n_1 rpm	n_{N2}
		Nominal output power P_{N2} [hp] Nominal output torque T_{N2} [lb in] Train of gears / ratio … / i																			
1 600 000	28	–	–	–	–	–	–	–	33 650 C2I/28.6	59 150 C2I/28.9	71 300 C2I/28.8	107 100 C2I/29.5	142 600 C2I/30.3	236 200 C2I/29.9	281 200 C2I/30.1	356 400 C2I/28	443 500 C2I/28	562 300 C2I/28.8			
	25	–	–	–	–	–	–	–	32 000 C2I/24.5	53 100 C2I/25.1	66 550 C2I/26	102 800 C2I/27	142 200 C2I/26.3	222 600 C2I/27.2	285 200 C2I/26.4	361 500 C2I/25.1	449 900 C2I/25.1	570 400 C2I/26			
	25	1 290 CI/24.1	2 060 CI/25	2 570 CI/25	4 600 CI/26	5 350 CI/26	9 130 CI/24.1	19 100 CI/25	–	37 800 CI/24.6	–	75 600 CI/24.6	–	154 700 CI/25.4	–	–	–	–			
	22.4	–	–	–	–	–	–	–	64 34 300 C2I/23.8	97.5 52 150 C2I/23.8	136 72 650 C2I/23.7	205 103 200 C2I/22.4▲	278 143 800 C2I/23▲	– 207 500 C2I/23.6	– 286 500 C2I/23.8	– 363 300 C2I/23	– 452 300 C2I/23	– 573 100 C2I/23.7	22.4	2800	**125**
	20	–	–	–	–	–	–	–	59 30 350 C2I/20.4	99.3 51 550 C2I/20.6	126 67 750 C2I/21.4	203 104 600 C2I/20.5	252 126 300 C2I/19.9	– 210 400 C2I/21.5	– 260 000 C2I/20.8	– 368 300 C2I/20.6	– 457 100 C2I/20.6	– 533 400 C2I/21.4	20	2500	
	20	2.66 1 290 CI/19.3	4.38 2 210 CI/20	5.38 2 710 CI/20	8.96 4 700 CI/20.8	10.3 5 430 CI/20.8	20 9 730 CI/19.3	38.5 19 400 CI/20	55.4 27 900 CI/20	85.2 42 300 CI/19.7	109 55 800 CI/20.3	175 86 950 CI/19.7	218 111 600 CI/20.3	– 173 900 CI/20.3	– 220 600 CI/20	– 285 100 CI/19.7	– 358 500 CI/19.7	– 435 100 CI/20.3	20	2500	
	18	–	–	–	–	–	–	–	56.5 28 600 CI/18	88.9 45 000 CI/18	113 59 300 CI/18.7	177 89 650 CI/18	224 117 500 CI/18.7	355 178 400 CI/17.9	448 226 900 CI/18	– 274 400 CI/18	– 346 400 CI/18	– 460 200 CI/18.4	18	2240	
	16	2.7 1 290 CI/15.2	4.53 2 250 CI/15.8	5.57 2 770 CI/15.8	9.27 4 790 CI/16.4	10.7 5 530 CI/16.4	20.6 9 860 CI/15.2	42.7 21 200 CI/15.8	57.6 28 600 CI/15.8	87.7 42 900 CI/15.5	120 60 650 CI/16	180 88 150 CI/15.5	239 120 500 CI/16	349 176 300 CI/16	486 241 400 CI/15.8	560 287 300 CI/16.3	699 358 300 CI/16.3	912 459 900 CI/16	16	2000	
	14	–	–	–	–	–	–	–	61 30 300 CI/14.2	95.3 47 350 CI/14.2	122 62 850 CI/14.7	195 96 800 CI/14.2	240 123 700 CI/14.7	393 193 600 CI/14.1	480 238 600 CI/14.2	625 310 400 CI/14.2	741 368 300 CI/14.2	953 484 000 CI/14.5	14	1800	
	12.5	2.87 1 400 CI/12.4	5.15 2 560 CI/12.6	6.53 3 240 CI/12.6	11 5 680 CI/13.1	12.7 6 580 CI/13.1	23 11 200 CI/12.4	46.8 23 250 CI/12.6	55 27 850 CI/12.9	96.2 49 400 CI/13	110 56 750 CI/13.1	192 98 800 CI/13	223 112 600 CI/12.8	385 191 200 CI/12.6	433 219 300 CI/12.9	587 296 600 CI/12.8	719 363 100 CI/12.8	859 426 800 CI/12.6	12.5	1600	
	11.2	–	–	–	–	–	–	–	63.6 32 200 CI/11.3	85.5 43 900 CI/11.4	130 68 350 CI/11.7	171 86 750 CI/11.3	258 135 600 CI/11.7	342 175 600 CI/11.4	516 261 500 CI/11.3	611 303 600 CI/11	764 379 500 CI/11	957 495 700 CI/11.5	11.2	1400	
	10	2.6 1 350 CI/10.3	5.4 2 720 CI/10	6.6 3 330 CI/10	11 5 750 CI/10.4	12.7 6 660 CI/10.4	23.7 11 750 CI/9.81	46.5 23 450 CI/10	59.1 30 350 CI/10.2	90.9 47 350 CI/10.3	118 61 850 CI/10.4	185 96 300 CI/10.3	233 119 500 CI/10.2	374 188 500 CI/10	466 239 300 CI/10.2	655 335 900 CI/10.2	802 411 000 CI/10.2	918 463 100 CI/10	10	1250	
	9	–	–	–	–	–	–	–	62.9 31 850 CI/9	94.5 48 050 CI/9.04	126 66 100 CI/9.33	188 94 700 CI/8.93	248 130 100 CI/9.33	377 191 700 CI/9.04	496 251 000 CI/9	666 327 700 CI/8.75	832 409 600 CI/8.75	957 495 700 CI/9.2	9	1120	
	8	2.86 1 420 CI/7.85	5.24 2 640 CI/8	6.6 3 330 CI/8	11 5 750 CI/8.33	12.7 6 660 CI/8.33	23.4 11 550 CI/7.85	46.5 23 450 CI/8	56.7 29 150 CI/8.15	90.9 47 350 CI/8.27	113 59 400 CI/8.31	188 97 850 CI/8.27	223 114 700 CI/8.14	340 175 900 CI/8.21	447 229 700 CI/8.15	600 296 100 CI/7.83	751 370 700 CI/7.83	885 446 400 CI/8	8	1000	
	6.3	2.72 1 400 CI/6.53	4.46 2 310 CI/6.57	5.58 2 890 CI/6.57	9.58 4 730 CI/6.27	12.2 6 040 CI/6.27	18.9 9 720 CI/6.53	41.4 21 450 CI/6.57	–	81.6 40 250 CI/6.27	–	162 83 400 CI/6.53	–	324 167 700 CI/6.57	–	577 285 100 CI/6.27	722 356 300 CI/6.27	–	6.3	800	
	5	–	–	–	–	–	–	35 17 750 CI/5.06	–	65.7 32 150 CI/4.89	–	136 69 500 CI/5.11	–	261 132 300 CI/5.06	–	464 226 800 CI/4.89	580 283 500 CI/4.89	–	5	630	
1 400 000	125	–	–	–	–	–	–	–	23 550 C2I/123	45 000 C2I/129	53 300 C2I/130	92 500 C2I/127	103 300 C2I/125	154 600 C2I/123	185 800 C2I/125	271 700 C2I/129	339 600 C2I/129	370 200 C2I/127			
	125	–	–	–	–	–	9 000 ICI/123	18 000 ICI/127	21 500 ICI/127	38 700 ICI/126	53 550 ICI/130	80 000 ICI/126	–	–	–	–	–	–			

For n_1 lower than 560 rpm see page 195.

9 - Bevel helical gear reducer selection tables

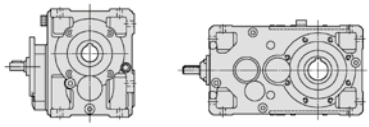

$n_{N2} \cdot L_h$ rpm · h	i_N	50	63	64	80	81	100	125	140	160	180	200	225	250	280	320	321	360	i_N	n_1	n_{N2} rpm
		Nominal output power P_{N2} [hp] Nominal output torque T_{N2} [lb in] Train of gears / ratio … / i																			
1 400 000	100	–	–	–	–	–	–	–	26 200 C2I/98.2	47 500 C2I/103	56 500 C2I/104	97 500 C2I/102	111 300 C2I/100	164 000 C2I/98.5	219 300 C2I/100	294 800 C2I/103	368 400 C2I/103	438 700 C2I/102			
	100	–	1800 ICI/99.4	2180 ICI/99.4	3870 ICI/103	4250 ICI/103	10 450 ICI/100	18 400 ICI/102	22 550 ICI/100	46 700 ICI/106	53 000 ICI/102	98 000 ICI/106	–	–	–	–	–	–			
	90	–	–	–	–	–	–	–	27 700 C2I/87.8	45 800 C2I/90.4	54 650 C2I/90	89 500 C2I/87.9	117 300 C2I/90.3	167 500 C2I/89	231 400 C2I/89.7	293 400 C2I/88.8	365 100 C2I/88.8	462 900 C2I/91.4			
	80	–	–	–	–	–	–	–	27 650 C2I/78.6	47 950 C2I/82.7	58 650 C2I/83.1	95 250 C2I/81.4	117 300 C2I/80.2	167 600 C2I/78.8	231 300 C2I/80.3	293 000 C2I/82.6	355 400 C2I/82.6	462 700 C2I/81.2			
	80	1180 ICI/75.2	2 060 ICI/79.5	2 580 ICI/79.5	4 400 ICI/82.7	5 180 ICI/82.7	10 050 ICI/76.7	16 400 ICI/78.1	20 200 ICI/78.1	35 550 ICI/78.1	41 650 ICI/80.5	73 100 ICI/78.1	–	–	–	–	–	–			
	71	–	–	–	–	–	–	–	29 400 C2I/70.2	43 600 C2I/72.3	57 350 C2I/72	88 600 C2I/70.3	124 600 C2I/72.2	177 900 C2I/71.2	245 700 C2I/71.7	311 500 C2I/71.1	387 600 C2I/71.1	491 500 C2I/73.1			
	63	–	–	–	–	–	–	–	29 300 C2I/62	53 000 C2I/65.2	73 100 C2I/65.5	109 000 C2I/64.2	128 000 C2I/63.2	218 000 C2I/62.1	252 300 C2I/63.3	353 100 C2I/65.1	441 400 C2I/65.1	490 700 C2I/64			
	63	1250 ICI/60.1	2 060 ICI/63.6	2 580 ICI/63.6	4 570 ICI/66.2	5 370 ICI/66.2	10 600 ICI/61.3	20 050 ICI/62.5	25 250 ICI/62.5	46 200 ICI/62.5	53 350 ICI/64.4	95 000 ICI/62.5	–	–	–	–	–	–			
	56	–	–	–	–	–	–	–	31 050 C2I/55.4	56 000 C2I/57	65 650 C2I/56.8	116 300 C2I/55.5	131 400 C2I/56.9	218 100 C2I/56.1	259 200 C2I/56.6	328 500 C2I/56	408 800 C2I/56	518 300 C2I/57.6			
	50	–	–	–	–	–	–	–	30 900 C2I/50.4	56 200 C2I/52.1	65 650 C2I/52.4	115 500 C2I/53.9	131 300 C2I/53.1	209 900 C2I/52.1	258 800 C2I/53.1	330 900 C2I/51.3	413 600 C2I/51.3	517 500 C2I/50.5			
	50	1 400 ICI/49	2 500 ICI/50.9	2 930 ICI/50.9	4 700 ICI/53	5 310 ICI/53	10 950 ICI/49.9	21 000 ICI/50	26 650 ICI/49.3	46 450 ICI/52.5	56 650 ICI/50.8	98 000 ICI/52.5	–	–	–	–	–	–			
	45	–	–	–	–	–	–	–	32 300 C2I/45.1	50 900 C2I/45.6	68 450 C2I/45.4	104 700 C2I/46.6	136 900 C2I/47.8	196 300 C2I/47.1	269 900 C2I/47.5	342 100 C2I/44.2	425 800 C2I/44.2	539 800 C2I/45.4			
	40	–	–	–	–	–	–	–	31 450 C2I/38.7	48 500 C2I/39.5	65 400 C2I/41	98 850 C2I/42.6	138 600 C2I/41.4	197 900 C2I/42.8	273 300 C2I/41.6	346 500 C2I/39.5	431 100 C2I/39.5	546 600 C2I/41			
	40	1 530 ICI/38.6	2 540 ICI/40.1	3 180 ICI/40.1	5 160 ICI/41.8	5 970 ICI/41.8	11 900 ICI/39.4	21 550 ICI/39.4	25 000 ICI/40.2	49 300 ICI/41.4	55 400 ICI/41.6	100 100 ICI/41.4	–	–	–	–	–	–			
	35.5	–	–	–	–	–	–	–	33 200 C2I/37.5	49 200 C2I/37.5	70 250 C2I/37.3	99 950 C2I/35.3	137 800 C2I/36.2	200 700 C2I/37.2	277 200 C2I/37.5	351 400 C2I/36.3	437 300 C2I/36.3	554 400 C2I/37.3			
	31.5	–	–	–	–	–	–	–	32 650 C2I/32	58 150 C2I/33.1	75 500 C2I/33.2	115 500 C2I/34.2	138 600 C2I/33.7	231 700 C2I/33.1	273 200 C2I/33.7	356 400 C2I/31.3	443 500 C2I/31.3	562 300 C2I/32.5			
	31.5	1550 ICI/32.1	2 320 ICI/33	2 900 ICI/33	4 790 ICI/31.4	5 260 ICI/31.4	10 650 ICI/32.8	20 350 ICI/32.4	–	43 000 ICI/31.4	–	88 400 ICI/32.7	–	–	–	–	–	–			
	31.5	–	1 970 CI/31.3	2 190 CI/31.3	4 010 CI/32.5	4 990 CI/32.5	8 750 CI/30.1	17 000 CI/31.3	–	33 750 CI/30.8	–	59 500 CI/30.8	–	115 800 CI/31.7	–	–	–	–			

For n_1 lower than 560 rpm see page 195.
▲ Possible forced lubrication with heat exchanger: consult us.

9 - Bevel helical gear reducer selection tables

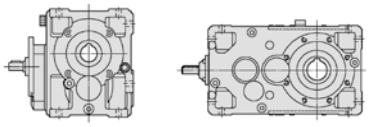

$n_{N2} \cdot L_h$ rpm · h	i_N	50	63	64	80	81	100	125	140	160	180	200	225	250	280	320	321	360	i_N	n_1 rpm	n_{N2}
		Nominal output power P_{N2} [hp] Nominal output torque T_{N2} [lb in] Train of gears / ratio … / i																			
1 400 000	28	–	–	–	–	–	–	–	34 150 C2I/28.6	61 300 C2I/28.9	72 300 C2I/28.8	111 000 C2I/29.5	144 600 C2I/30.3	237 100 C2I/29.9	285 200 C2I/30.1	361 500 C2I/28	449 900 C2I/28	570 400 C2I/28.8			
	25	–	–	–	–	–	–	–	58.8 32 450 C2I/24.5	97.5 55 050 C2I/25.1	115 67 500 C2I/26	173 105 200 C2I/27 ▲	244 144 200 C2I/26.3 ▲	– 230 600 C2I/27.2	– 289 200 C2I/26.4	– 366 600 C2I/25.1	– 456 300 C2I/25.1	– 578 500 C2I/26	25	2800	112
	25	2.4 1 300 CI/24.1	3.67 2 060 CI/25	4.61 2 600 CI/25	7.97 4 660 CI/26	9.18 5 370 CI/26	17.2 9 300 CI/24.1	34.4 19 350 CI/25	–	69.2 38 350 CI/24.6	–	138 76 650 CI/24.6	–	– 156 900 CI/25.4	–	–	–	–	25	2800	
	22.4	–	–	–	–	–	–	–	57.9 34 750 C2I/23.8	90.1 53 950 C2I/23.8	123 73 650 C2I/23.7	187 105 300 C2I/22.4	252 145 700 C2I/23	– 210 400 C2I/23.6	– 290 400 C2I/23.8	– 368 300 C2I/23	– 458 400 C2I/23	– 580 900 C2I/23.7	22.4	2500	
	20	–	–	–	–	–	–	–	53.5 30 750 C2I/20.4	90.2 52 250 C2I/20.6	114 68 650 C2I/21.4	184 106 000 C2I/20.5	228 127 900 C2I/19.9	353 213 100 C2I/21.5 ▲	450 263 500 C2I/20.8 ▲	– 373 100 C2I/20.6	– 463 100 C2I/20.6	– 540 400 C2I/21.4	20	2240	
	20	2.4 1 300 CI/19.3	3.97 2 240 CI/20	4.88 2 750 CI/20	8.13 4 760 CI/20.8	9.39 5 500 CI/20.8	18.4 9 970 CI/19.3	34.9 19 650 CI/20	50.3 28 300 CI/20	77.3 42 850 CI/19.7	99.1 56 550 CI/20.3	159 88 100 CI/19.7	198 113 100 CI/20.3	308 176 200 CI/20.3	397 223 500 CI/20	– 288 900 CI/19.7	– 370 500 CI/19.7	– 440 800 CI/20.3	20	2240	
	18	–	–	–	–	–	–	–	51.1 29 000 CI/18	80.4 45 650 CI/18	102 60 100 CI/18.7	160 90 900 CI/18	202 119 100 CI/18.7	321 180 800 CI/17.9	406 230 000 CI/18	490 278 100 CI/18	619 351 100 CI/18	804 466 500 CI/18.4	18	2000	
	16	2.44 1 300 CI/15.2	4.13 2 280 CI/15.8	5.07 2 800 CI/15.8	8.44 4 850 CI/16.4	9.76 5 600 CI/16.4	18.8 9 990 CI/15.2	39.7 21 900 CI/15.8	52.5 29 000 CI/15.8	80 43 500 CI/15.5	110 61 400 CI/16	165 89 650 CI/15.5	218 122 000 CI/16	318 178 500 CI/16	443 244 400 CI/15.8	511 291 000 CI/16.3	637 362 800 CI/16.3	832 465 700 CI/16	16	1800	
	14	–	–	–	–	–	–	–	55 30 750 CI/14.2	85.9 48 050 CI/14.2	110 63 750 CI/14.7	176 98 200 CI/14.2	216 125 500 CI/14.7	354 196 400 CI/14.1	433 242 000 CI/14.2	563 314 800 CI/14.2	668 373 600 CI/14.2	859 490 900 CI/14.5	14	1600	
	12.5	2.55 1 420 CI/12.4	4.58 2 600 CI/12.6	5.8 3 300 CI/12.6	9.76 5 770 CI/13.1	11.3 6 680 CI/13.1	20.5 11 400 CI/12.4	41.6 23 600 CI/12.6	48.9 28 300 CI/12.9	85.5 50 200 CI/13	97.7 57 650 CI/13.1	171 100 400 CI/13	203 117 300 CI/12.8	342 194 300 CI/12.6	385 222 800 CI/12.9	522 301 400 CI/12.8	639 368 900 CI/12.8	764 433 700 CI/12.6	12.5	1400	
	11.2	–	–	–	–	–	–	–	57.1 32 400 CI/11.3	77.3 44 400 CI/11.4	117 68 850 CI/11.7	154 87 650 CI/11.3	233 136 900 CI/11.7	309 177 400 CI/11.4	466 264 100 CI/11.3	551 306 600 CI/11	689 383 200 CI/11	863 500 600 CI/11.5	11.2	1250	
	10	2.4 1 390 CI/10.3	4.85 2 730 CI/10	5.93 3 340 CI/10	9.85 5 770 CI/10.4	11.4 6 680 CI/10.4	21.4 11 800 CI/9.81	41.9 23 600 CI/10	53.2 30 550 CI/10.2	82.2 47 800 CI/10.3	107 62 400 CI/10.4	171 99 550 CI/10.3	213 122 100 CI/10.2	338 190 200 CI/10	421 241 500 CI/10.2	593 339 200 CI/10.2	725 414 700 CI/10.2	832 468 100 CI/10	10	1120	
	9	–	–	–	–	–	–	–	56.7 32 200 CI/9	85.3 48 600 CI/9.04	113 66 750 CI/9.33	171 96 100 CI/8.93	223 131 500 CI/9.33	340 193 500 CI/9.04	447 253 600 CI/9	600 330 700 CI/8.75	751 414 100 CI/8.75	863 500 600 CI/9.2	9	1000	
	8	2.65 1 450 CI/7.85	4.74 2 660 CI/8	5.96 3 340 CI/8	9.89 5 770 CI/8.33	11.4 6 680 CI/8.33	21.1 11 600 CI/7.85	42.1 23 600 CI/8	51.5 29 450 CI/8.15	82.5 47 800 CI/8.27	103 59 950 CI/8.31	174 101 000 CI/8.27	203 115 800 CI/8.14	308 177 400 CI/8.21	406 231 900 CI/8.15	544 298 600 CI/7.83	683 374 500 CI/7.83	804 450 400 CI/8	8	900	
	6.3	2.48 1 440 CI/6.53	4.1 2 390 CI/6.57	5.13 2 990 CI/6.57	8.55 4 750 CI/6.27	11.1 6 170 CI/6.27	16.8 9 770 CI/6.53	38.1 22 200 CI/6.57	–	73.2 40 750 CI/6.27	–	148 85 700 CI/6.53	–	290 169 500 CI/6.57	–	518 287 900 CI/6.27	647 359 900 CI/6.27	–	6.3	710	
	5	–	–	–	–	–	–	32.3 18 350 CI/5.06	–	59.1 32 500 CI/4.89	–	125 72 000 CI/5.11	–	241 137 100 CI/5.06	–	416 229 000 CI/4.89	520 286 300 CI/4.89	–	5	560	
1 250 000	125	–	–	–	–	–	–	–	24 350 C2I/123	46 200 C2I/129	55 150 C2I/130	95 000 C2I/127	106 800 C2I/125	159 900 C2I/123	190 800 C2I/125	281 100 C2I/129	351 300 C2I/129	380 000 C2I/127			
	125	–	–	–	–	–	9 250 ICI/123	18 500 ICI/127	22 250 ICI/127	40 000 ICI/126	55 400 ICI/130	82 500 ICI/126	–	–	–	–	–	–			

For n_1 lower than 560 rpm see page 195.
▲ Possible forced lubrication with heat exchanger: consult us.

9 - Bevel helical gear reducer selection tables

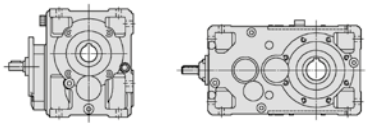

$n_{N2} \cdot L_h$ rpm · h	i_N	50	63	64	80	81	100	125	140	160	180	200	225	250	280	320	321	360	i_N	n_1 rpm	n_{N2} rpm
		Nominal output power P_{N2} [hp] Nominal output torque T_{N2} [lb in] Train of gears / ratio … / i																			
1 250 000	100	–	–	–	–	–	–	–	26 850 C2I/98.2	48 700 C2I/103	58 450 C2I/104	100 000 C2I/102	114 100 C2I/100	169 700 C2I/98.5	224 900 C2I/100	304 900 C2I/103	381 200 C2I/103	449 800 C2I/102			
	100	–	1850 ICI/99.4	2240 ICI/99.4	4000 ICI/103	4370 ICI/103	10 600 ICI/100	19 050 ICI/102	23 150 ICI/100	48 300 ICI/106	54 500 ICI/102	98 350 ICI/106	–	–	–	–	–	–			
	90	–	–	–	–	–	–	–	28 500 C2I/87.8	47 250 C2I/90.4	56 200 C2I/90	92 350 C2I/87.9	120 700 C2I/90.3	172 300 C2I/89	238 000 C2I/89.7	301 700 C2I/88.8	375 500 C2I/88.8	476 100 C2I/91.4			
	80	–	–	–	–	–	–	–	28 500 C2I/78.6	49 650 C2I/82.7	60 550 C2I/83.1	98 650 C2I/81.4	121 100 C2I/80.2	173 100 C2I/78.8	238 800 C2I/80.3	302 500 C2I/82.6	367 000 C2I/82.6	477 600 C2I/81.2			
	80	1220 ICI/75.2	2 070 ICI/79.5	2 590 ICI/79.5	4 560 ICI/82.7	5 370 ICI/82.7	10 400 ICI/76.7	17 000 ICI/78.1	20 850 ICI/78.1	36 700 ICI/78.1	42 350 ICI/80.5	75 450 ICI/78.1	–	–	–	–	–	–			
	71	–	–	–	–	–	–	–	30 250 C2I/70.2	45 000 C2I/72.3	58 950 C2I/72	91 050 C2I/70.3	128 000 C2I/72.2	182 800 C2I/71.2	252 500 C2I/71.7	320 000 C2I/71.1	398 300 C2I/71.1	504 900 C2I/73.1			
	63	–	–	–	–	–	–	–	30 100 C2I/62	54 500 C2I/65.2	75 750 C2I/65.5	112 000 C2I/64.2	132 600 C2I/63.2	224 000 C2I/62.1	261 600 C2I/63.3	366 000 C2I/65.1	457 500 C2I/65.1	503 700 C2I/64			
	63	1 300 ICI/60.1	2 070 ICI/63.6	2 590 ICI/63.6	4 590 ICI/66.2	5 390 ICI/66.2	10 900 ICI/61.3	20 800 ICI/62.5	25 900 ICI/62.5	47 500 ICI/62.5	55 050 ICI/64.4	98 650 ICI/62.5	–	–	–	–	–	–			
	56	–	–	–	–	–	–	–	31 900 C2I/55.4	58 000 C2I/57	68 000 C2I/56.8	118 000 C2I/55.5	135 000 C2I/56.9	226 000 C2I/56.1	266 300 C2I/56.6	337 500 C2I/56	420 000 C2I/56	532 500 C2I/57.6			
	50	–	–	–	–	–	–	–	31 300 C2I/50.4	58 150 C2I/52.1	66 500 C2I/52.4	115 900 C2I/53.9	133 000 C2I/53.1	217 200 C2I/52.1	263 100 C2I/53.1	342 300 C2I/51.3	427 900 C2I/51.3	524 600 C2I/50.5			
	50	1 410 ICI/49	2 510 ICI/50.9	2 940 ICI/50.9	4 760 ICI/53	5 410 ICI/53	11 000 ICI/49.9	21 300 ICI/50	27 000 ICI/49.3	48 100 ICI/52.5	58 600 ICI/50.8	98 350 ICI/52.5	–	–	–	–	–	–			
	45	–	–	–	–	–	–	–	32 700 C2I/45.1	52 500 C2I/45.6	69 300 C2I/45.4	108 100 C2I/46.6	138 600 C2I/47.8	202 600 C2I/47.1	273 300 C2I/47.5	346 500 C2I/44.2	431 100 C2I/44.2	546 600 C2I/45.4			
	40	–	–	–	–	–	–	–	31 900 C2I/38.7	49 200 C2I/39.5	66 350 C2I/41	102 400 C2I/42.6	140 500 C2I/41.4	200 700 C2I/42.8	277 200 C2I/41.6	351 400 C2I/39.5	437 300 C2I/39.5	554 400 C2I/41			
	40	1 540 ICI/38.6	2 550 ICI/40.1	3 190 ICI/40.1	5 230 ICI/41.8	6 050 ICI/41.8	12 350 ICI/39.4	21 850 ICI/39.4	25 400 ICI/40.2	51 050 ICI/41.4	56 200 ICI/41.6	103 700 ICI/41.4	–	–	–	–	–	–			
	35.5	–	–	–	–	–	–	–	33 650 C2I/37.5	49 900 C2I/37.5	71 300 C2I/37.3	101 400 C2I/35.3	139 800 C2I/36.2	203 500 C2I/37.2	281 200 C2I/37.5	356 400 C2I/36.3	443 500 C2I/36.3	562 300 C2I/37.3			
	31.5	–	–	–	–	–	–	–	33 100 C2I/32	58 350 C2I/33.1	78 250 C2I/33.2	115 900 C2I/34.2	140 600 C2I/33.7	232 600 C2I/33.1	277 200 C2I/33.7	361 500 C2I/31.3	449 900 C2I/31.3	570 400 C2I/32.5			
	31.5	1550 ICI/32.1	2 400 ICI/33	3 000 ICI/33	4 860 ICI/31.4	5 330 ICI/31.4	11 050 ICI/32.8	20 650 ICI/32.4	–	43 600 ICI/31.4	–	89 700 ICI/32.7	–	–	–	–	–	–			
	31.5	–	1 980 CI/31.3	2 200 CI/31.3	4 030 CI/32.5	5 010 CI/32.5	8 750 CI/30.1	17 000 CI/31.3	–	33 900 CI/30.8	–	61 700 CI/30.8	–	120 000 CI/31.7	–	–	–	–			

For n_1 lower than 560 rpm see page 195.
▲ Possible forced lubrication with heat exchanger: consult us.

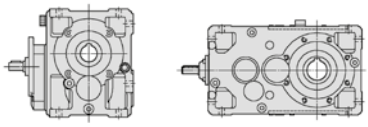

$n_{N2} \cdot L_h$ rpm · h	i_N	50	63	64	80	81	100	125	140	160	180	200	225	250	280	320	321	360	i_N	n_1 rpm	n_{N2}
		Nominal output power P_{N2} [hp] Nominal output torque T_{N2} [lb in] Train of gears / ratio ... / i																			
1 250 000	28	–	–	–	–	–	–	–	53.8 34 650 C2I/28.6	97.5 63 500 C2I/28.9	113 73 350 C2I/28.8	173 115 000 C2I/29.5▲	215 146 700 C2I/30.3▲	– 238 000 C2I/29.9	– 289 200 C2I/30.1	– 366 600 C2I/28	– 456 300 C2I/28	– 578 500 C2I/28.8	28	2800	**100**
	25	–	–	–	–	–	–	–	53.2 32 900 C2I/24.5	90.1 56 950 C2I/25.1	104 68 450 C2I/26	160 108 900 C2I/27	221 146 200 C2I/26.3	– 238 500 C2I/27.2	– 293 200 C2I/26.4	– 371 600 C2I/25.1	– 462 500 C2I/25.1	– 586 400 C2I/26	25	2500	
	25	2.15 1 300 CI/24.1	3.31 2 080 CI/25	4.17 2 630 CI/25	7.21 4 730 CI/26	8.23 5 390 CI/26	15.4 9 340 CI/24.1	31.1 19 600 CI/25	–	62.6 38 850 CI/24.6	–	125 77 700 CI/24.6	–	– 159 000 CI/25.4	–	–	–	–	25	2500	
	22.4	–	–	–	–	–	–	–	52.6 35 200 C2I/23.8	83.4 55 750 C2I/23.8	112 74 600 C2I/23.7	173 108 800 C2I/22.4	228 147 700 C2I/23	324 215 100 C2I/23.6▲	439 294 200 C2I/23.8▲	– 373 100 C2I/23	– 464 500 C2I/23	– 588 600 C2I/23.7	22.4	2240	
	20	–	–	–	–	–	–	–	48.4 31 150 C2I/20.4	81.6 52 950 C2I/20.6	103 69 550 C2I/21.4	166 107 400 C2I/20.5	207 129 700 C2I/19.9	319 216 000 C2I/21.5	407 267 100 C2I/20.8	– 378 200 C2I/20.6	– 469 400 C2I/20.6	– 547 800 C2I/21.4	20	2000	
	20	2.15 1 300 CI/19.3	3.59 2 270 CI/20	4.42 2 790 CI/20	7.36 4 820 CI/20.8	8.5 5 570 CI/20.8	17 10 300 CI/19.3	31.6 19 900 CI/20	45.5 28 700 CI/20	70 43 450 CI/19.7	89.7 57 350 CI/20.3	144 89 300 CI/19.7	179 114 700 CI/20.3	279 178 600 CI/20.3	359 226 500 CI/20	472 292 800 CI/19.7	618 383 300 CI/19.7	699 446 800 CI/20.3	20	2000	
	18	–	–	–	–	–	–	–	46.6 29 350 CI/18	73.3 46 200 CI/18	93.1 60 900 CI/18.7	146 92 050 CI/18	184 120 600 CI/18.7	293 183 100 CI/17.9	370 232 900 CI/18	447 281 600 CI/18	574 361 600 CI/18	733 472 400 CI/18.4	18	1800	
	16	2.18 1 300 CI/15.2	3.72 2 310 CI/15.8	4.57 2 840 CI/15.8	7.61 4 920 CI/16.4	8.8 5 680 CI/16.4	17 10 150 CI/15.2	35.8 22 250 CI/15.8	47.3 29 400 CI/15.8	73.7 45 050 CI/15.5	98.8 62 250 CI/16	152 92 900 CI/15.5	199 125 100 CI/16	287 181 100 CI/16	399 247 900 CI/15.8	460 295 100 CI/16.3	574 368 000 CI/16.3	750 472 300 CI/16	16	1600	
	14	–	–	–	–	–	–	–	48.9 31 250 CI/14.2	76.4 48 800 CI/14.2	97.7 64 750 CI/14.7	156 99 750 CI/14.2	192 127 500 CI/14.7	315 199 500 CI/14.1	385 245 900 CI/14.2	501 319 900 CI/14.2	594 379 600 CI/14.2	764 498 700 CI/14.5	14	1400	
	12.5	2.33 1 450 CI/12.4	4.11 2 620 CI/12.6	5.2 3 310 CI/12.6	8.74 5 790 CI/13.1	10.1 6 710 CI/13.1	18.4 11 450 CI/12.4	37.4 23 750 CI/12.6	44.1 28 600 CI/12.9	77.3 50 800 CI/13	88.2 58 250 CI/13.1	154 101 400 CI/13	187 120 900 CI/12.8	309 196 300 CI/12.6	347 225 100 CI/12.9	470 304 300 CI/12.8	576 372 600 CI/12.8	689 438 000 CI/12.6	12.5	1250	
	11.2	–	–	–	–	–	–	–	51.5 32 600 CI/11.3	70 44 900 CI/11.4	106 69 300 CI/11.7	140 88 500 CI/11.3	210 138 200 CI/11.7	279 179 200 CI/11.4	421 266 600 CI/11.3	498 309 500 CI/11	623 386 900 CI/11	781 505 400 CI/11.5	11.2	1120	
	10	2.21 1 440 CI/10.3	4.34 2 740 CI/10	5.31 3 350 CI/10	8.82 5 790 CI/10.4	10.2 6 700 CI/10.4	19.2 11 850 CI/9.81	37.7 23 750 CI/10	47.5 30 550 CI/10.2	74.1 48 250 CI/10.3	96.3 63 000 CI/10.4	158 103 000 CI/10.3	197 126 300 CI/10.2	305 192 000 CI/10	380 243 900 CI/10.2	535 342 500 CI/10.2	653 418 600 CI/10.2	751 473 300 CI/10	10	1000	
	9	–	–	–	–	–	–	–	51.5 32 500 CI/9	77.5 49 050 CI/9.04	103 67 350 CI/9.33	159 99 150 CI/8.93	203 132 700 CI/9.33	308 195 200 CI/9.04	406 256 000 CI/9	544 333 500 CI/8.75	683 418 300 CI/8.75	784 505 200 CI/9.2	9	900	
	8	2.44 1 510 CI/7.85	4.24 2 670 CI/8	5.31 3 350 CI/8	8.82 5 790 CI/8.33	10.2 6 700 CI/8.33	18.9 11 700 CI/7.85	37.7 23 750 CI/8	46.3 29 750 CI/8.15	74.1 48 250 CI/8.27	92.6 60 600 CI/8.31	161 104 600 CI/8.27	182 117 000 CI/8.14	277 179 100 CI/8.21	365 234 300 CI/8.15	488 301 400 CI/7.83	614 378 700 CI/7.83	722 454 900 CI/8	8	800	
	6.3	2.21 1 440 CI/6.53	3.77 2 480 CI/6.57	4.72 3 100 CI/6.57	7.62 4 780 CI/6.27	9.88 6 200 CI/6.27	15 9 820 CI/6.53	35 23 050 CI/6.57	–	65.7 41 200 CI/6.27	–	136 88 850 CI/6.53	–	260 171 200 CI/6.57	–	464 290 800 CI/6.27	580 363 400 CI/6.27	–	6.3	630	
1 120 000	160	–	–	–	–	–	–	–	26 500 C2I/151	38 700 C2I/154	54 500 C2I/158	80 000 C2I/151	109 000 C2I/156	160 000 C2I/156	214 700 C2I/154	272 000 C2I/156	335 000 C2I/156	423 500 C2I/161			
	160	–	–	–	–	–	9 000 ICI/154	18 000 ICI/159	18 800 ICI/159	38 700 ICI/157	45 100 ICI/162	65 700 ICI/157	–	–	–	–	–	–			
	125	–	–	–	–	–	–	–	25 150 C2I/123	47 500 C2I/129	57 000 C2I/130	97 500 C2I/127	110 400 C2I/125	165 300 C2I/123	196 000 C2I/125	290 500 C2I/129	363 100 C2I/129	390 400 C2I/127			

For n_1 lower than 560 rpm see page 195.
▲ Possible forced lubrication with heat exchanger: consult us.

9 - Bevel helical gear reducer selection tables

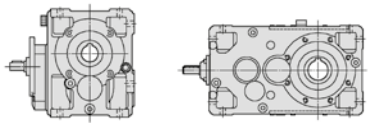

$n_{N2} \cdot L_h$ rpm · h	i_N	50	63	64	80	81	100	125	140	160	180	200	225	250	280	320	321	360	i_N	n_1 rpm	n_{N2}
		Nominal output power P_{N2} [hp] Nominal output torque T_{N2} [lb in] Train of gears / ratio ... / i																			
1 120 000	125	–	–	–	–	–	9 500 ICI/123	19 000 ICI/127	23 000 ICI/127	41 200 ICI/126	57 300 ICI/130	85 000 ICI/126	–	–	–	–	–	–			
	100	–	–	–	–	–	–	–	27 650 C2I/98.2	50 000 C2I/103	60 350 C2I/104	103 000 C2I/102	117 300 C2I/100	175 200 C2I/98.5	231 300 C2I/100	314 700 C2I/103	393 400 C2I/103	462 700 C2I/102			
	100	–	1900 ICI/99.4	2300 ICI/99.4	4120 ICI/103	4500 ICI/103	11 050 ICI/100	19 650 ICI/102	23 800 ICI/100	49 850 ICI/106	56 000 ICI/102	98 700 ICI/106	–	–	–	–	–	–			
	90	–	–	–	–	–	–	–	29 400 C2I/87.8	48 950 C2I/90.4	58 050 C2I/90	95 700 C2I/87.9	124 600 C2I/90.3	177 900 C2I/89	245 700 C2I/89.7	311 500 C2I/88.8	387 600 C2I/88.8	491 500 C2I/91.4			
	80	–	–	–	–	–	–	–	29 300 C2I/78.6	51 450 C2I/82.7	62 250 C2I/83.1	102 300 C2I/81.4	124 500 C2I/80.2	177 800 C2I/78.8	245 400 C2I/80.3	310 800 C2I/82.6	380 300 C2I/82.6	490 700 C2I/81.2			
	80	1250 ICI/75.2	2 080 ICI/79.5	2 600 ICI/79.5	4 600 ICI/82.7	5 410 ICI/82.7	10 500 ICI/76.7	17 600 ICI/78.1	21 450 ICI/78.1	37 700 ICI/78.1	43 100 ICI/80.5	77 500 ICI/78.1	–	–	–	–	–	–			
	71	–	–	–	–	–	–	–	31 050 C2I/70.2	46 650 C2I/72.3	60 500 C2I/72	93 450 C2I/70.3	131 400 C2I/72.2	187 600 C2I/71.2	259 200 C2I/71.7	328 500 C2I/71.1	408 800 C2I/71.1	518 300 C2I/73.1			
	63	–	–	–	–	–	–	–	30 900 C2I/62	56 000 C2I/65.2	78 450 C2I/65.5	116 100 C2I/64.2	137 400 C2I/63.2	233 000 C2I/62.1	271 000 C2I/63.3	379 200 C2I/65.1	473 900 C2I/65.1	517 500 C2I/64			
	63	1 310 ICI/60.1	2 080 ICI/63.6	2 600 ICI/63.6	4 600 ICI/66.2	5 410 ICI/66.2	11 200 ICI/61.3	21 550 ICI/62.5	26 650 ICI/62.5	49 050 ICI/62.5	57 000 ICI/64.4	99 000 ICI/62.5	–	–	–	–	–	–			
	56	–	–	–	–	–	–	–	32 300 C2I/55.4	58 000 C2I/57	69 850 C2I/56.8	118 000 C2I/55.5	136 900 C2I/56.9	233 800 C2I/56.1	269 900 C2I/56.6	342 100 C2I/56	425 800 C2I/56	539 800 C2I/57.6			
	50	–	–	–	–	–	–	–	31 700 C2I/50.4	58 550 C2I/52.1	67 350 C2I/52.4	116 300 C2I/53.9	135 400 C2I/53.1	224 200 C2I/52.1	271 600 C2I/53.1	353 300 C2I/51.3	441 600 C2I/51.3	531 200 C2I/50.5			
	50	1 410 ICI/49	2 520 ICI/50.9	2 950 ICI/50.9	4 820 ICI/53	5 590 ICI/53	11 050 ICI/49.9	21 550 ICI/50	27 350 ICI/49.3	49 650 ICI/52.5	60 450 ICI/50.8	98 700 ICI/52.5	–	–	–	–	–	–			
	45	–	–	–	–	–	–	–	33 200 C2I/45.1	54 400 C2I/45.6	70 250 C2I/45.4	112 000 C2I/46.6	140 500 C2I/47.8	209 900 C2I/47.1	277 200 C2I/47.5	351 400 C2I/44.2	437 300 C2I/44.2	554 400 C2I/45.4			
	40	–	–	–	–	–	–	–	32 350 C2I/38.7	49 900 C2I/39.5	67 300 C2I/41	106 200 C2I/42.6	142 600 C2I/41.4	203 500 C2I/42.8	281 200 C2I/41.6	356 400 C2I/39.5	443 500 C2I/39.5	562 300 C2I/41			
	40	1 550 ICI/38.6	2 560 ICI/40.1	3 200 ICI/40.1	5 310 ICI/41.8	6 140 ICI/41.8	12 800 ICI/39.4	22 200 ICI/39.4	25 750 ICI/40.2	52 900 ICI/41.4	57 000 ICI/41.6	107 400 ICI/41.4	–	–	–	–	–	–			
	35.5	–	–	–	–	–	–	–	34 150 C2I/37.5	50 600 C2I/37.5	72 300 C2I/37.3	102 800 C2I/35.3	141 800 C2I/36.2	206 500 C2I/37.2	285 200 C2I/37.5	361 500 C2I/36.3	449 900 C2I/36.3	570 400 C2I/37.3			
	31.5	–	–	–	–	–	–	–	46.6 33 550 C2I/32	78.7 58 550 C2I/33.1	106 78 950 C2I/33.2	151 116 400 C2I/34.2▲	188 142 600 C2I/33.7▲	– 233 500 C2I/33.1	– 286 100 C2I/33.7	– 366 600 C2I/31.3	– 456 300 C2I/31.3	– 578 500 C2I/32.5	31.5	2800	**90**
	31.5	2.21 1600 ICI/32.1	3.35 2 490 ICI/33	4.19 3 110 ICI/33	6.96 4 930 ICI/31.4	7.64 5 410 ICI/31.4	15.5 11 450 ICI/32.8	28.7 20 950 ICI/32.4	–	62.7 44 250 ICI/31.4	–	124 91 150 ICI/32.7	–	–	–	–	–	–	31.5	2800	

For n_1 lower than 560 rpm see page 195.
▲ Possible forced lubrication with heat exchanger: consult us.

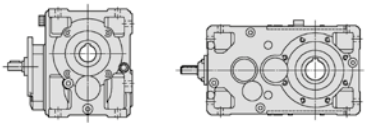

$n_{N2} \cdot L_h$ rpm · h	i_N	50	63	64	80	81	100	125	140	160	180	200	225	250	280	320	321	360	i_N	n_1 rpm	n_{N2}
		Nominal output power P_{N2} [hp] Nominal output torque T_{N2} [lb in] Train of gears / ratio … / i																			
1 120 000	31.5	–	2.83 1 990 CI/31.3	3.14 2 210 CI/31.3	5.52 4 040 CI/32.5	6.87 5 030 CI/32.5	13.4 9 100 CI/30.1	25.1 17 700 CI/31.3	–	49.1 34 000 CI/30.8	–	92.3 63 900 CI/30.8	–	– 124 300 CI/31.7	–	–	–	–	31.5	2800	**90**
	28	–	–	–	–	–	–	–	48.7 35 100 C2I/28.6	87.4 63 750 C2I/28.9	102 74 350 C2I/28.8	160 119 000 C2I/29.5	195 148 700 C2I/30.3	– 238 800 C2I/29.9	– 293 200 C2I/30.1	– 371 600 C2I/28	– 462 500 C2I/28	– 586 400 C2I/28.8	28	2500	
	25	–	–	–	–	–	–	–	48.3 33 350 C2I/24.5	83.4 58 850 C2I/25.1	94.8 69 350 C2I/26	148 112 500 C2I/27	200 148 100 C2I/26.3	323 246 500 C2I/27.2▲	401 297 100 C2I/26.4▲	– 376 500 C2I/25.1	– 468 600 C2I/25.1	– 594 100 C2I/26	25	2240	
	25	1.93 1 310 CI/24.1	3 2 110 CI/25	3.79 2 670 CI/25	6.55 4 790 CI/26	7.46 5 460 CI/26	13.8 9 370 CI/24.1	28.8 20 250 CI/25	–	57.8 40 050 CI/24.6	–	114 78 700 CI/24.6	–	226 161 100 CI/25.4	–	–	–	–	25	2240	
	22.4	–	–	–	–	–	–	–	47.6 35 700 C2I/23.8	77.1 57 700 C2I/23.8	101 75 650 C2I/23.7	160 112 600 C2I/22.4	207 149 700 C2I/23	299 222 600 C2I/23.6	398 298 200 C2I/23.8	– 378 200 C2I/23	– 470 800 C2I/23	– 596 600 C2I/23.7	22.4	2000	
	20	–	–	–	–	–	–	–	44.2 31 550 C2I/20.4	74.4 53 600 C2I/20.6	94.2 70 450 C2I/21.4	152 108 800 C2I/20.5	188 131 300 C2I/19.9	291 218 800 C2I/21.5	371 270 400 C2I/20.8	531 383 000 C2I/20.6▲	659 475 400 C2I/20.6▲	742 554 700 C2I/21.4▲	20	1800	
	20	1.94 1 310 CI/19.3	3.28 2 290 CI/20	4.03 2 820 CI/20	6.71 4 880 CI/20.8	7.75 5 640 CI/20.8	15.8 10 650 CI/19.3	28.8 20 200 CI/20	41.5 29 050 CI/20	63.8 44 000 CI/19.7	81.7 58 050 CI/20.3	131 90 400 CI/19.7	163 116 100 CI/20.3	254 180 800 CI/20.3	328 229 400 CI/20	430 296 500 CI/19.7	574 395 600 CI/19.7	637 452 500 CI/20.3	20	1800	
	18	–	–	–	–	–	–	–	42 29 750 CI/18	66.1 46 850 CI/18	84 61 750 CI/18.7	132 93 350 CI/18	166 122 300 CI/18.7	264 185 700 CI/17.9	333 236 200 CI/18	403 285 600 CI/18	528 374 600 CI/18	661 479 100 CI/18.4	18	1600	
	16	1.91 1 310 CI/15.2	3.31 2 350 CI/15.8	4.07 2 890 CI/15.8	6.77 5 000 CI/16.4	7.82 5 770 CI/16.4	15.5 10 600 CI/15.2	31.5 22 350 CI/15.8	42.1 29 850 CI/15.8	67.1 46 900 CI/15.5	87.9 63 250 CI/16	138 96 700 CI/15.5	181 130 200 CI/16	255 184 000 CI/16	355 251 900 CI/15.8	409 299 800 CI/16.3	511 373 900 CI/16.3	666 479 900 CI/16	16	1400	
	14	–	–	–	–	–	–	–	44.1 31 550 CI/14.2	68.6 49 100 CI/14.2	88.2 65 450 CI/14.7	140 100 400 CI/14.2	176 130 800 CI/14.7	283 200 700 CI/14.1	347 248 500 CI/14.2	451 323 100 CI/14.2	536 383 200 CI/14.2	689 503 700 CI/14.5	14	1250	
	12.5	2.15 1 500 CI/12.4	3.7 2 630 CI/12.6	4.68 3 320 CI/12.6	7.86 5 810 CI/13.1	9.1 6 730 CI/13.1	16.5 11 500 CI/12.4	33.7 23 900 CI/12.6	39.9 28 850 CI/12.9	70 51 350 CI/13	79.8 58 800 CI/13.1	140 102 400 CI/13	168 121 300 CI/12.8	279 198 200 CI/12.6	314 227 400 CI/12.9	425 307 100 CI/12.8	521 376 100 CI/12.8	623 442 200 CI/12.6	12.5	1120	
	11.2	–	–	–	–	–	–	–	46.3 32 800 CI/11.3	63.2 45 450 CI/11.4	94.8 69 750 CI/11.7	126 89 400 CI/11.3	189 139 100 CI/11.7	252 181 000 CI/11.4	380 269 200 CI/11.3	449 312 500 CI/11	561 390 600 CI/11	704 510 400 CI/11.5	11.2	1000	
	10	2.06 1 480 CI/10.3	3.92 2 740 CI/10	4.8 3 360 CI/10	7.96 5 810 CI/10.4	9.22 6 720 CI/10.4	17.4 11 950 CI/9.81	34.1 23 900 CI/10	42.8 30 550 CI/10.2	67.3 48 700 CI/10.3	87.4 63 550 CI/10.4	147 106 300 CI/10.3	177 126 300 CI/10.2	276 193 600 CI/10	345 246 000 CI/10.2	485 345 600 CI/10.2	593 422 100 CI/10.2	683 478 100 CI/10	10	900	
	9	–	–	–	–	–	–	–	46.3 32 800 CI/9	69.6 49 600 CI/9.04	92.6 68 050 CI/9.33	146 102 700 CI/8.93	182 134 100 CI/9.33	277 197 100 CI/9.04	365 258 600 CI/9	488 336 700 CI/8.75	614 423 000 CI/8.75	704 510 400 CI/9.2	9	800	
	8	2.22 1 550 CI/7.85	3.78 2 690 CI/8	4.73 3 360 CI/8	7.86 5 810 CI/8.33	9.09 6 730 CI/8.33	16.8 11 750 CI/7.85	33.9 24 100 CI/8	42.3 30 650 CI/8.15	66.5 48 750 CI/8.27	83 61 200 CI/8.31	148 108 400 CI/8.27	164 118 700 CI/8.14	248 180 900 CI/8.21	327 236 800 CI/8.15	437 304 200 CI/7.83	551 383 000 CI/7.83	647 459 400 CI/8	8	710	
	6.3	1.97 1 450 CI/6.53	3.48 2 570 CI/6.57	4.34 3 210 CI/6.57	6.81 4 800 CI/6.27	8.82 6 220 CI/6.27	13.4 9 870 CI/6.53	32.3 23 850 CI/6.57	–	60 42 350 CI/6.27	–	125 92 050 CI/6.53	–	234 172 900 CI/6.57	–	416 293 600 CI/6.27	517 365 000 CI/6.27	–	6.3	560	
1 000 000	160	–	–	–	–	–	–	–	26 500 C2I/151	40 000 C2I/154	56 000 C2I/158	82 500 C2I/151	112 000 C2I/156	165 000 C2I/156	222 100 C2I/154	280 000 C2I/156	335 000 C2I/156	438 200 C2I/161			
	160	–	–	–	–	–	9 250 ICI/154	18 500 ICI/159	19 450 ICI/159	40 000 ICI/157	46 650 ICI/162	67 450 ICI/157	–	–	–	–	–	–			

For n_1 lower than 560 rpm see page 195.
▲ Possible forced lubrication with heat exchanger: consult us.

9 - Bevel helical gear reducer selection tables

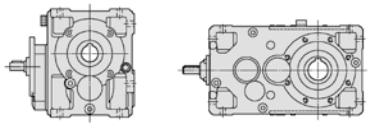

$n_{N2} \cdot L_h$ rpm · h	i_N	50	63	64	80	81	100	125	140	160	180	200	225	250	280	320	321	360	i_N	n_1 rpm	n_{N2} rpm
		Nominal output power P_{N2} [hp] Nominal output torque T_{N2} [lb in] Train of gears / ratio … / i																			
1 000 000	125	–	–	–	–	–	–	–	26 050 C2I/123	48 700 C2I/129	58 950 C2I/130	100 000 C2I/127	114 200 C2I/125	171 000 C2I/123	201 000 C2I/125	300 500 C2I/129	375 700 C2I/129	400 400 C2I/127			
	125	–	–	–	–	–	9 750 ICI/123	19 500 ICI/127	23 800 ICI/127	42 500 ICI/126	59 250 ICI/130	87 500 ICI/126	–	–	–	–	–	–			
	100	–	–	–	–	–	–	–	28 500 C2I/98.2	51 500 C2I/103	62 500 C2I/104	106 000 C2I/102	121 200 C2I/100	181 500 C2I/98.5	238 800 C2I/100	326 100 C2I/103	407 600 C2I/103	477 600 C2I/102			
	100	–	1950 ICI/99.4	2360 ICI/99.4	4 300 ICI/103	4620 ICI/103	11 100 ICI/100	20 350 ICI/102	24 550 ICI/100	50 400 ICI/106	58 000 ICI/102	99 050 ICI/106	–	–	–	–	–	–			
	90	–	–	–	–	–	–	–	30 250 C2I/87.8	50 750 C2I/90.4	59 600 C2I/90	99 150 C2I/87.9	128 000 C2I/90.3	182 800 C2I/89	252 500 C2I/89.7	320 000 C2I/88.8	398 300 C2I/88.8	504 900 C2I/91.4			
	80	–	–	–	–	–	–	–	30 100 C2I/78.6	53 350 C2I/82.7	63 900 C2I/83.1	106 000 C2I/81.4	127 800 C2I/80.2	182 500 C2I/78.8	251 900 C2I/80.3	319 000 C2I/82.6	394 200 C2I/82.6	503 700 C2I/81.2			
	80	1 310 ICI/75.2	2 090 ICI/79.5	2 610 ICI/79.5	4 620 ICI/82.7	5 430 ICI/82.7	10 550 ICI/76.7	18 250 ICI/78.1	22 000 ICI/78.1	38 700 ICI/78.1	44 250 ICI/80.5	79 600 ICI/78.1	–	–	–	–	–	–			
	71	–	–	–	–	–	–	–	31 900 C2I/70.2	48 350 C2I/72.3	62 150 C2I/72	96 000 C2I/70.3	135 000 C2I/72.2	192 800 C2I/71.2	266 300 C2I/71.7	337 500 C2I/71.1	420 000 C2I/71.1	532 500 C2I/73.1			
	63	–	–	–	–	–	–	–	31 300 C2I/62	58 000 C2I/65.2	79 200 C2I/65.5	116 600 C2I/64.2	142 100 C2I/63.2	233 800 C2I/62.1	280 300 C2I/63.3	392 300 C2I/65.1	490 300 C2I/65.1	524 600 C2I/64			
	63	1 310 ICI/60.1	2 090 ICI/63.6	2 610 ICI/63.6	4 620 ICI/66.2	5 430 ICI/66.2	11 200 ICI/61.3	22 300 ICI/62.5	27 000 ICI/62.5	49 250 ICI/62.5	59 000 ICI/64.4	99 400 ICI/62.5	–	–	–	–	–	–			
	56	–	–	–	–	–	–	–	32 700 C2I/55.4	60 000 C2I/57	70 100 C2I/56.8	122 000 C2I/55.5	138 600 C2I/56.9	239 100 C2I/56.1	273 300 C2I/56.6	348 400 C2I/56	435 600 C2I/56	546 600 C2I/57.6			
	50	–	–	–	–	–	–	–	32 150 C2I/50.4	58 750 C2I/52.1	69 450 C2I/52.4	116 700 C2I/53.9	140 300 C2I/53.1	232 200 C2I/52.1	281 400 C2I/53.1	366 000 C2I/51.3	457 500 C2I/51.3	538 800 C2I/50.5			
	50	1 420 ICI/49	2 530 ICI/50.9	2 960 ICI/50.9	4 920 ICI/53	5 790 ICI/53	11 100 ICI/49.9	21 850 ICI/50	27 700 ICI/49.3	50 400 ICI/52.5	62 650 ICI/50.8	99 050 ICI/52.5	–	–	–	–	–	–			
	45	–	–	–	–	–	–	–	33 650 C2I/45.1	56 400 C2I/45.6	71 300 C2I/45.4	116 100 C2I/46.6	142 600 C2I/47.8	217 500 C2I/47.1	281 200 C2I/47.5	356 400 C2I/44.2	443 500 C2I/44.2	562 300 C2I/45.4			
	40	–	–	–	–	–	–	–	32 800 C2I/38.7	50 650 C2I/39.5	68 250 C2I/41	110 000 C2I/42.6	144 600 C2I/41.4	206 500 C2I/42.8	285 200 C2I/41.6	361 500 C2I/39.5	449 900 C2I/39.5	570 400 C2I/41			
	40	1 550 ICI/38.6	2 570 ICI/40.1	3 210 ICI/40.1	5 380 ICI/41.8	6 230 ICI/41.8	13 250 ICI/39.4	22 500 ICI/39.4	26 100 ICI/40.2	54 850 ICI/41.4	57 850 ICI/41.6	110 400 ICI/41.4	–	–	–	–	–	–			
									41	60.9	87.3	131	176	250	342	–	–	–	35.5	2800	**80**
	35.5	–	–	–	–	–	–	–	34 650 C2I/37.5	51 350 C2I/37.5	73 350 C2I/37.3	104 300 C2I/35.3	143 800 C2I/36.2	209 400 C2I/37.2	289 200 C2I/37.5	366 600 C2I/36.3	456 300 C2I/36.3	578 500 C2I/37.3			
									42.2	70.5	94.6	136	170	–	–	–	–	–	31.5	2500	
	31.5	–	–	–	–	–	–	–	34 050 C2I/32	58 800 C2I/33.1	79 200 C2I/33.2	116 800 C2I/34.2	144 500 C2I/33.7	234 300 C2I/33.1	296 000 C2I/33.7	371 600 C2I/31.3	462 500 C2I/31.3	586 400 C2I/32.5			

For n_1 lower than 560 rpm see page 195.

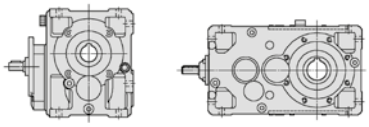

$n_{N2} \cdot L_h$ rpm · h	i_N	50	63	64	80	81	100	125	140	160	180	200	225	250	280	320	321	360	i_N	n_1 rpm	n_{N2}
		Nominal output power P_{N2} [hp] Nominal output torque T_{N2} [lb in] Train of gears / ratio … / i																			
1 000 000	31.5	2.01 1 630 ICI/32.1	3.1 2 570 ICI/33	3.87 3 220 ICI/33	6.3 4 990 ICI/31.4	6.91 5 480 ICI/31.4	14.3 11 850 ICI/32.8	26 21 250 ICI/32.4	– –	56.7 44 850 ICI/31.4	– –	114 94 350 ICI/32.7	– –	– –	– –	– –	– –	– –	31.5	2500	80
	31.5	– –	2.53 2 000 CI/31.3	2.82 2 220 CI/31.3	4.95 4 060 CI/32.5	6.16 5 050 CI/32.5	12 9 130 CI/30.1	22.5 17 750 CI/31.3	– –	44 34 150 CI/30.8	– –	85.2 66 150 CI/30.8	– –	– 128 600 CI/31.7	– –	– –	– –	– –	31.5	2500	
	28	– –	– –	– –	– –	– –	– –	– –	44.2 35 550 C2I/28.6	78.6 63 950 C2I/28.9	92.9 75 300 C2I/28.8	148 123 000 C2I/29.5	177 150 600 C2I/30.3	285 239 600 C2I/29.9▲	351 297 100 C2I/30.1▲	– 376 500 C2I/28	– 468 600 C2I/28	– 594 100 C2I/28.8	28	2240	
	25	– –	– –	– –	– –	– –	– –	– –	43.7 33 800 C2I/24.5	77.1 60 850 C2I/25.1	85.8 70 250 C2I/26	137 116 400 C2I/27	181 150 100 C2I/26.3	293 250 900 C2I/27.2	363 301 100 C2I/26.4	– 381 700 C2I/25.1	– 475 000 C2I/25.1	– 602 200 C2I/26	25	2000	
	25	1.73 1 310 CI/24.1	2.72 2 140 CI/25	3.43 2 700 CI/25	5.93 4 860 CI/26	6.75 5 530 CI/26	12.4 9 400 CI/24.1	26.6 20 950 CI/25	– –	53.4 41 400 CI/24.6	– –	103 79 800 CI/24.6	– –	204 163 300 CI/25.4	– –	– –	– –	– –	25	2000	
	22.4	– –	– –	– –	– –	– –	– –	– –	43.4 36 150 C2I/23.8	71.6 59 550 C2I/23.8	92.5 76 600 C2I/23.7	148 116 200 C2I/22.4	188 151 600 C2I/23	278 229 700 C2I/23.6	362 302 000 C2I/23.8	476 383 000 C2I/23▲	592 476 800 C2I/23▲	729 604 200 C2I/23.7▲	22.4	1800	
	20	– –	– –	– –	– –	– –	– –	– –	39.8 32 000 C2I/20.4	67 54 400 C2I/20.6	84.9 71 450 C2I/21.4	137 110 300 C2I/20.5	170 133 200 C2I/19.9	262 221 900 C2I/21.5	334 274 300 C2I/20.8	479 388 400 C2I/20.6	594 482 100 C2I/20.6	669 562 600 C2I/21.4	20	1600	
	20	1.73 1 310 CI/19.3	2.95 2 330 CI/20	3.63 2 860 CI/20	6.05 4 950 CI/20.8	6.98 5 720 CI/20.8	14.5 11 050 CI/19.3	26 20 450 CI/20	37.4 29 450 CI/20	57.5 44 600 CI/19.7	73.7 58 900 CI/20.3	118 91 700 CI/19.7	147 117 800 CI/20.3	229 183 400 CI/20.3	295 232 600 CI/20	388 300 700 CI/19.7	528 409 900 CI/19.7	574 458 900 CI/20.3	20	1600	
	18	– –	– –	– –	– –	– –	– –	– –	37.3 30 250 CI/18	58.8 47 600 CI/18	74.7 62 750 CI/18.7	117 94 850 CI/18	148 124 300 CI/18.7	235 188 700 CI/17.9	296 240 000 CI/18	358 290 200 CI/18	481 390 000 CI/18	588 486 800 CI/18.4	18	1400	
	16	1.71 1 310 CI/15.2	2.96 2 360 CI/15.8	3.64 2 900 CI/15.8	6.06 5 010 CI/16.4	7.01 5 790 CI/16.4	14.3 10 950 CI/15.2	28.2 22 450 CI/15.8	38 30 250 CI/15.8	62 48 500 CI/15.5	78.9 63 650 CI/16	127 99 350 CI/15.5	167 134 700 CI/16	230 185 900 CI/16	319 253 600 CI/15.8	369 302 700 CI/16.3	460 377 400 CI/16.3	598 482 300 CI/16	16	1250	
	14	– –	– –	– –	– –	– –	– –	– –	39.9 31 850 CI/14.2	61.9 49 450 CI/14.2	79.8 66 100 CI/14.7	126 100 900 CI/14.2	163 135 100 CI/14.7	255 201 800 CI/14.1	314 251 000 CI/14.2	408 326 100 CI/14.2	484 386 800 CI/14.2	623 508 500 CI/14.5	14	1120	
	12.5	1.99 1 550 CI/12.4	3.33 2 640 CI/12.6	4.2 3 340 CI/12.6	7.04 5 830 CI/13.1	8.15 6 750 CI/13.1	14.8 11 550 CI/12.4	30.2 24 050 CI/12.6	36 29 150 CI/12.9	63.2 51 950 CI/13	72 59 400 CI/13.1	126 103 500 CI/13	150 121 700 CI/12.8	252 200 200 CI/12.6	283 229 700 CI/12.9	384 310 000 CI/12.8	470 379 800 CI/12.8	561 446 400 CI/12.6	12.5	1000	
	11.2	– –	– –	– –	– –	– –	– –	– –	41.9 33 000 CI/11.3	57.5 45 900 CI/11.4	85.9 70 200 CI/11.7	114 90 250 CI/11.3	171 140 100 CI/11.7	229 182 700 CI/11.4	345 271 600 CI/11.3	408 315 300 CI/11	510 394 100 CI/11	639 514 900 CI/11.5	11.2	900	
	10	1.89 1 540 CI/10.3	3.49 2 750 CI/10	4.28 3 370 CI/10	7.1 5 830 CI/10.4	8.22 6 750 CI/10.4	15.6 12 000 CI/9.81	31.1 24 550 CI/10	38 30 550 CI/10.2	60.4 49 200 CI/10.3	78.5 64 200 CI/10.4	135 110 100 CI/10.3	158 126 300 CI/10.2	248 195 400 CI/10	309 248 500 CI/10.2	436 349 100 CI/10.2	532 426 100 CI/10.2	614 483 400 CI/10	10	800	
	9	– –	– –	– –	– –	– –	– –	– –	42.3 33 800 CI/9	62.5 50 150 CI/9.04	83 68 750 CI/9.33	134 106 500 CI/8.93	164 136 000 CI/9.33	248 199 000 CI/9.04	327 261 400 CI/9	437 339 800 CI/8.75	551 427 800 CI/8.75	631 515 600 CI/9.2	9	710	
	8	1.97 1 550 CI/7.85	3.38 2 700 CI/8	4.21 3 370 CI/8	7 5 830 CI/8.33	8.1 6 750 CI/8.33	15 11 800 CI/7.85	31.2 25 000 CI/8	38.9 31 750 CI/8.15	59.6 49 250 CI/8.27	74.4 61 850 CI/8.31	136 112 400 CI/8.27	151 123 000 CI/8.14	222 182 600 CI/8.21	293 239 200 CI/8.15	392 307 100 CI/7.83	494 387 200 CI/7.83	580 464 000 CI/8	8	630	
900 000	200	– –	– –	– –	– –	– –	6 900 ICI/192	16 000 ICI/199	– –	31 500 ICI/196	– –	63 300 ICI/196	– –	– –	– –	– –	– –	– –			
	160	– –	– –	– –	– –	– –	– –	– –	27 200 C2I/151	41 200 C2I/154	58 000 C2I/158	85 000 C2I/151	115 000 C2I/156	170 000 C2I/156	229 600 C2I/154	290 000 C2I/156	345 000 C2I/156	452 800 C2I/161			

For n_1 lower than 560 rpm see page 195.
▲ Possible forced lubrication with heat exchanger: consult us.

9 - Bevel helical gear reducer selection tables

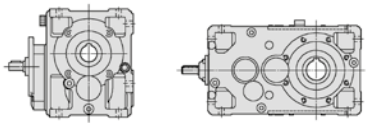

$n_{N2} \cdot L_h$ rpm · h	i_N	50	63	64	80	81	100	125	140	160	180	200	225	250	280	320	321	360	i_N	n_1 rpm	n_{N2}
		Nominal output power P_{N2} [hp] Nominal output torque T_{N2} [lb in] Train of gears / ratio ... / i																			
900 000	160	–	–	–	–	–	9 500 ICI/154	19 000 ICI/159	20 100 ICI/159	41 600 ICI/157	48 000 ICI/162	69 300 ICI/157	–	–	–	–	–	–			
	125	–	–	–	–	–	–	–	26 900 C2I/123	50 000 C2I/129	60 850 C2I/130	103 000 C2I/127	117 900 C2I/125	176 500 C2I/123	206 700 C2I/125	310 200 C2I/129	387 700 C2I/129	411 800 C2I/127			
	125	–	–	–	–	–	10 000 ICI/123	20 000 ICI/127	24 550 ICI/127	43 700 ICI/126	61 150 ICI/130	90 000 ICI/126	–	–	–	–	–	–			
	100	–	–	–	–	–	–	–	29 300 C2I/98.2	53 000 C2I/103	64 800 C2I/104	109 000 C2I/102	125 600 C2I/100	188 100 C2I/98.5	245 400 C2I/100	337 900 C2I/103	422 400 C2I/103	490 700 C2I/102			
	100	–	2000 ICI/99.4	2 490 ICI/99.4	4 310 ICI/103	4750 ICI/103	11 150 ICI/100	21 100 ICI/102	25 250 ICI/100	50 600 ICI/106	60 000 ICI/102	99 450 ICI/106	–	–	–	–	–	–			
	90	–	–	–	–	–	–	–	31 050 C2I/87.8	52 600 C2I/90.4	61 200 C2I/90	102 800 C2I/87.9	131 400 C2I/90.3	187 600 C2I/89	259 200 C2I/89.7	328 500 C2I/88.8	408 800 C2I/88.8	518 300 C2I/91.4			
	80	–	–	–	–	–	–	–	30 900 C2I/78.6	55 250 C2I/82.7	65 650 C2I/83.1	109 800 C2I/81.4	131 300 C2I/80.2	187 500 C2I/78.8	258 800 C2I/80.3	327 800 C2I/82.6	408 400 C2I/82.6	517 500 C2I/81.2			
	80	1 320 ICI/75.2	2 100 ICI/79.5	2 620 ICI/79.5	4 630 ICI/82.7	5 450 ICI/82.7	10 550 ICI/76.7	18 900 ICI/78.1	22 600 ICI/78.1	39 750 ICI/78.1	45 500 ICI/80.5	81 750 ICI/78.1	–	–	–	–	–	–			
	71	–	–	–	–	–	–	–	32 300 C2I/70.2	50 000 C2I/72.3	63 000 C2I/72	98 150 C2I/70.3	136 900 C2I/72.2	195 400 C2I/71.2	269 900 C2I/71.7	342 100 C2I/71.1	425 800 C2I/71.1	539 800 C2I/73.1			
	63	–	–	–	–	–	–	–	31 700 C2I/62	58 950 C2I/65.2	79 450 C2I/65.5	116 900 C2I/64.2	146 700 C2I/63.2	234 600 C2I/62.1	289 300 C2I/63.3	404 600 C2I/65.1	505 800 C2I/65.1	531 200 C2I/64			
	63	1 320 ICI/60.1	2 090 ICI/63.6	2 620 ICI/63.6	4 630 ICI/66.2	5 450 ICI/66.2	11 500 ICI/61.3	22 500 ICI/62.5	27 350 ICI/62.5	49 400 ICI/62.5	60 900 ICI/64.4	99 700 ICI/62.5	–	–	–	–	–	–			
	56	–	–	–	–	–	–	–	33 200 C2I/55.4	60 000 C2I/57	70 350 C2I/56.8	124 400 C2I/55.5	140 500 C2I/56.9	240 000 C2I/56.1	277 200 C2I/56.6	361 000 C2I/56	451 200 C2I/56	554 400 C2I/57.6			
	50	–	–	–	–	–	–	–	32 650 C2I/50.4	59 000 C2I/52.1	72 000 C2I/52.4	117 200 C2I/53.9	145 400 C2I/53.1	235 100 C2I/52.1	291 600 C2I/53.1	379 400 C2I/51.3	474 200 C2I/51.3	546 500 C2I/50.5			
	50	1 420 ICI/49	2 530 ICI/50.9	2 980 ICI/50.9	5 100 ICI/53	6 000 ICI/53	11 150 ICI/49.9	22 200 ICI/50	28 100 ICI/49.3	50 550 ICI/52.5	64 950 ICI/50.8	99 400 ICI/52.5	–	–	–	–	–	–			
	45	–	–	–	–	–	–	–	34 150 C2I/45.1	58 450 C2I/45.6	72 300 C2I/45.4	120 300 C2I/46.6	144 600 C2I/47.8	225 500 C2I/47.1	285 200 C2I/47.5	361 500 C2I/44.2	449 900 C2I/44.2	570 400 C2I/45.4			
	40	–	–	–	–	–	–	–	38.2 33 300 C2I/38.7	59 52 450 C2I/39.5	75 69 250 C2I/41	119 114 000 C2I/42.6	157 146 700 C2I/41.4	220 212 300 C2I/42.8	309 289 200 C2I/41.6	– 366 600 C2I/39.5	– 456 300 C2I/39.5	– 578 500 C2I/41	40	2800	71
	40	1.79 1 560 ICI/38.6	2.86 2 580 ICI/40.1	3.57 3 230 ICI/40.1	5.8 5 460 ICI/41.8	6.71 6 310 ICI/41.8	15.5 13 750 ICI/39.4	25.7 22 800 ICI/39.4	29.3 26 500 ICI/40.2	61 56 800 ICI/41.4	62.7 58 650 ICI/41.6	119 110 800 ICI/41.4	–	–	–	–	–	–	40	2800	
	35.5	–	–	–	–	–	–	–	37.1 35 100 C2I/37.5	55.1 52 050 C2I/37.5	79 74 350 C2I/37.3	119 105 700 C2I/35.3	160 145 700 C2I/36.2	226 212 300 C2I/37.2	310 293 200 C2I/37.5	– 371 600 C2I/36.3	– 462 500 C2I/36.3	– 586 400 C2I/37.3	35.5	2500	

For n_1 lower than 560 rpm see page 195.
▲ Possible forced lubrication with heat exchanger: consult us.

9 - Bevel helical gear reducer selection tables

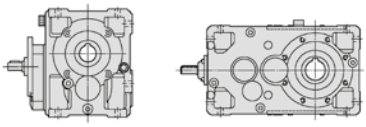

$n_{N2} \cdot L_h$ rpm · h	i_N	50	63	64	80	81	100	125	140	160	180	200	225	250	280	320	321	360	i_N	n_1 rpm	n_{N2}
		Nominal output power P_{N2} [hp] Nominal output torque T_{N2} [lb in] Train of gears / ratio … / i																			
900 000	31.5	–	–	–	–	–	–	–	38.3 34 500 C2I/32	63.4 59 000 C2I/33.1	85 79 500 C2I/33.2	122 117 200 C2I/34.2	155 146 400 C2I/33.7	253 235 100 C2I/33.1 ▲	321 304 700 C2I/33.7 ▲	427 376 500 C2I/31.3 ▲	531 468 600 C2I/31.3 ▲	650 594 100 C2I/32.5 ▲	31.5	2240	71
	31.5	1.81 1 630 ICI/32.1	2.87 2 660 ICI/33	3.58 3 320 ICI/33	5.72 5 060 ICI/31.4	6.28 5 550 ICI/31.4	13.3 12 250 ICI/32.8	23.6 21 500 ICI/32.4	–	51.5 45 450 ICI/31.4	–	106 97 500 ICI/32.7	–	–	–	–	–	–	31.5	2240	
	31.5	–	2.28 2 000 CI/31.3	2.53 2 230 CI/31.3	4.45 4 070 CI/32.5	5.54 5 060 CI/32.5	10.8 9 170 CI/30.1	20.3 17 800 CI/31.3	–	39.6 34 250 CI/30.8	–	78.9 68 350 CI/30.8	–	149 132 900 CI/31.7	–	–	–	–	31.5	2240	
	28	–	–	–	–	–	–	–	40 36 050 C2I/28.6	70.4 64 200 C2I/28.9	85.6 77 700 C2I/28.8	134 124 600 C2I/29.5	160 152 700 C2I/30.3	255 240 500 C2I/29.9	317 301 100 C2I/30.1	– 381 700 C2I/28	– 475 000 C2I/28	– 602 200 C2I/28.8	28	2000	
	25	–	–	–	–	–	–	–	39.8 34 200 C2I/24.5	71.6 62 850 C2I/25.1	79.5 72 400 C2I/26	127 120 100 C2I/27	165 152 000 C2I/26.3	265 251 800 C2I/27.2	330 304 900 C2I/26.4	440 386 500 C2I/25.1 ▲	548 481 000 C2I/25.1 ▲	670 609 800 C2I/26 ▲	25	1800	
	25	1.56 1 320 CI/24.1	2.48 2 170 CI/25	3.12 2 740 CI/25	5.4 4 920 CI/26	6.15 5 600 CI/26	11.2 9 430 CI/24.1	24.7 21 600 CI/25	–	48.2 41 550 CI/24.6	–	93.7 80 800 CI/24.6	–	186 165 400 CI/25.4	–	–	–	–	25	1800	
	22.4	–	–	–	–	–	–	–	39.1 36 650 C2I/23.8	65.9 61 700 C2I/23.8	83.4 77 700 C2I/23.7	137 120 400 C2I/22.4	170 153 700 C2I/23	256 238 000 C2I/23.6	327 306 300 C2I/23.8	429 388 400 C2I/23	534 483 500 C2I/23	657 612 700 C2I/23.7	22.4	1600	
	20	–	–	–	–	–	–	–	35.4 32 550 C2I/20.4	60 55 650 C2I/20.6	75.5 72 600 C2I/21.4	124 114 600 C2I/20.5	151 135 300 C2I/19.9	233 225 400 C2I/21.5	297 278 700 C2I/20.8	426 394 600 C2I/20.6	528 489 900 C2I/20.6	594 571 600 C2I/21.4	20	1400	
	20	1.52 1 320 CI/19.3	2.63 2 360 CI/20	3.23 2 910 CI/20	5.37 5 030 CI/20.8	6.21 5 820 CI/20.8	13.2 11 500 CI/19.3	23.1 20 800 CI/20	33.2 29 900 CI/20	51.8 45 950 CI/19.7	65.5 59 800 CI/20.3	105 93 150 CI/19.7	131 119 600 CI/20.3	204 186 300 CI/20.3	262 236 400 CI/20	345 305 500 CI/19.7	477 422 900 CI/19.7	520 474 800 CI/20.3	20	1400	
	18	–	–	–	–	–	–	–	33.3 30 250 CI/18	53 48 050 CI/18	66.7 62 750 CI/18.7	106 95 800 CI/18	132 124 300 CI/18.7	211 190 500 CI/17.9	264 240 000 CI/18	323 292 900 CI/18	444 403 400 CI/18	525 486 800 CI/18.4	18	1250	
	16	1.54 1 320 CI/15.2	2.66 2 360 CI/15.8	3.27 2 910 CI/15.8	5.45 5 030 CI/16.4	6.3 5 810 CI/16.4	13.2 11 300 CI/15.2	25.4 22 500 CI/15.8	35.2 31 250 CI/15.8	56.5 49 400 CI/15.5	71.1 64 050 CI/16	114 99 700 CI/15.5	155 139 200 CI/16	213 192 100 CI/16	288 255 300 CI/15.8	334 305 600 CI/16.3	416 380 800 CI/16.3	538 484 600 CI/16	16	1120	
	14	–	–	–	–	–	–	–	36 32 200 CI/14.2	55.7 49 850 CI/14.2	72 66 750 CI/14.7	113 101 500 CI/14.2	150 139 500 CI/14.7	229 203 000 CI/14.1	283 253 600 CI/14.2	368 329 300 CI/14.2	436 390 400 CI/14.2	561 513 400 CI/14.5	14	1000	
	12.5	1.8 1 560 CI/12.4	3.01 2 660 CI/12.6	3.79 3 350 CI/12.6	6.36 5 850 CI/13.1	7.36 6 770 CI/13.1	13.4 11 600 CI/12.4	27.4 24 200 CI/12.6	32.7 29 450 CI/12.9	57.5 52 500 CI/13	65.4 59 950 CI/13.1	114 104 400 CI/13	136 122 100 CI/12.8	229 202 100 CI/12.6	258 231 900 CI/12.9	348 312 800 CI/12.8	427 383 200 CI/12.8	514 454 200 CI/12.6	12.5	900	
	11.2	–	–	–	–	–	–	–	37.5 33 200 CI/11.3	51.7 46 450 CI/11.4	76.9 70 650 CI/11.7	103 91 150 CI/11.3	156 143 300 CI/11.7	205 184 600 CI/11.4	309 274 200 CI/11.3	366 318 400 CI/11	458 398 000 CI/11	574 520 100 CI/11.5	11.2	800	
	10	1.74 1 590 CI/10.3	3.11 2 760 CI/10	3.81 3 380 CI/10	6.33 5 850 CI/10.4	7.32 6 770 CI/10.4	13.9 12 100 CI/9.81	28.6 25 450 CI/10	33.7 30 550 CI/10.2	54.2 49 700 CI/10.3	70.3 64 800 CI/10.4	124 114 100 CI/10.3	140 126 300 CI/10.2	222 197 300 CI/10	277 250 900 CI/10.2	391 352 700 CI/10.2	477 430 200 CI/10.2	551 488 900 CI/10	10	710	
	9	–	–	–	–	–	–	–	38.9 35 050 CI/9	56.1 50 700 CI/9.04	74.4 69 500 CI/9.33	124 110 400 CI/8.93	151 141 000 CI/9.33	222 200 900 CI/9.04	293 264 100 CI/9	392 343 000 CI/8.75	494 432 500 CI/8.75	566 520 800 CI/9.2	9	630	
	8	1.76 1 550 CI/7.85	3.02 2 720 CI/8	3.76 3 380 CI/8	6.24 5 850 CI/8.33	7.22 6 770 CI/8.33	13.4 11 850 CI/7.85	28.7 25 900 CI/8	35.8 32 900 CI/8.15	53.5 49 750 CI/8.27	66.8 62 450 CI/8.31	125 116 400 CI/8.27	139 127 400 CI/8.14	199 184 300 CI/8.21	263 241 700 CI/8.15	351 309 900 CI/7.83	444 391 400 CI/7.83	520 468 400 CI/8	8	560	
800 000	200	–	–	–	–	–	7 100 ICI/192	16 500 ICI/199	–	32 500 ICI/196	–	65 450 ICI/196	–	–	–	–	–	–			

For n_1 lower than 560 rpm see page 195.
▲ Possible forced lubrication with heat exchanger: consult us.

9 - Bevel helical gear reducer selection tables

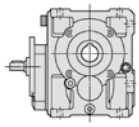

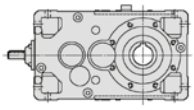

$n_{N2} \cdot L_h$ rpm · h	i_N	Nominal output power P_{N2} [hp] / Nominal output torque T_{N2} [lb in] / Train of gears / ratio ... / i																	i_N	n_1 rpm	n_{N2}
		50	63	64	80	81	100	125	140	160	180	200	225	250	280	320	321	360			
800 000	160	–	–	–	–	–	–	–	28 000 C2I/151	42 500 C2I/154	60 000 C2I/158	87 500 C2I/151	118 000 C2I/156	175 000 C2I/156	237 500 C2I/154	300 000 C2I/156	355 000 C2I/156	468 500 C2I/161			
	160	–	–	–	–	–	9 750 ICI/154	19 500 ICI/159	20 800 ICI/159	41 750 ICI/157	48 150 ICI/162	71 050 ICI/157	–	–	–	–	–	–			
	125	–	–	–	–	–	–	–	27 850 C2I/123	51 500 C2I/129	63 050 C2I/130	106 000 C2I/127	122 100 C2I/125	182 900 C2I/123	213 400 C2I/125	321 300 C2I/129	401 700 C2I/129	425 100 C2I/127			
	125	–	–	–	–	–	10 300 ICI/123	20 600 ICI/127	25 450 ICI/127	45 000 ICI/126	61 850 ICI/130	92 500 ICI/126	–	–	–	–	–	–			
	100	–	–	–	–	–	–	–	30 100 C2I/98.2	54 500 C2I/103	67 150 C2I/104	112 000 C2I/102	130 200 C2I/100	194 900 C2I/98.5	251 900 C2I/100	350 300 C2I/103	437 900 C2I/103	503 700 C2I/102			
	100	–	2 100 ICI/99.4	2 500 ICI/99.4	4 330 ICI/103	4870 ICI/103	11 200 ICI/100	21 850 ICI/102	26 150 ICI/100	50 750 ICI/106	61 500 ICI/102	99 800 ICI/106	–	–	–	–	–	–			
	90	–	–	–	–	–	–	–	31 900 C2I/87.8	54 500 C2I/90.4	62 900 C2I/90	106 500 C2I/87.9	135 000 C2I/90.3	192 800 C2I/89	266 300 C2I/89.7	337 500 C2I/88.8	420 000 C2I/88.8	532 500 C2I/91.4			
	80	–	–	–	–	–	–	–	31 300 C2I/78.6	57 150 C2I/82.7	66 500 C2I/83.1	113 600 C2I/81.4	133 000 C2I/80.2	190 100 C2I/78.8	262 300 C2I/80.3	338 000 C2I/82.6	422 500 C2I/82.6	524 600 C2I/81.2			
	80	1 320 ICI/75.2	2 100 ICI/79.5	2 630 ICI/79.5	4 650 ICI/82.7	5 470 ICI/82.7	10 600 ICI/76.7	19 600 ICI/78.1	22 900 ICI/78.1	40 300 ICI/78.1	46 100 ICI/80.5	82 850 ICI/78.1	–	–	–	–	–	–			
	71	–	–	–	–	–	–	–	32 700 C2I/70.2	51 600 C2I/72.3	63 800 C2I/72	101 300 C2I/70.3	138 600 C2I/72.2	197 900 C2I/71.2	273 300 C2I/71.7	346 500 C2I/71.1	431 100 C2I/71.1	546 600 C2I/73.1			
	63	–	–	–	–	–	–	–	32 150 C2I/62	59 150 C2I/65.2	79 750 C2I/65.5	117 400 C2I/64.2	152 000 C2I/63.2	235 500 C2I/62.1	299 700 C2I/63.3	406 100 C2I/65.1	507 700 C2I/65.1	538 800 C2I/64			
	63	1 320 ICI/60.1	2 120 ICI/63.6	2 630 ICI/63.6	4 650 ICI/66.2	5 470 ICI/66.2	11 850 ICI/61.3	22 600 ICI/62.5	27 700 ICI/62.5	49 600 ICI/62.5	61 800 ICI/64.4	100 100 ICI/62.5	–	–	–	–	–	–			
	56	–	–	–	–	–	–	–	33 650 C2I/55.4	61 500 C2I/57	70 600 C2I/56.8	124 800 C2I/55.5	142 600 C2I/56.9	240 900 C2I/56.1	281 200 C2I/56.6	374 100 C2I/56	467 700 C2I/56	562 300 C2I/57.6			
	50	–	–	–	–	–	–	–	33 100 C2I/50.4	59 200 C2I/52.1	74 600 C2I/52.4	117 600 C2I/53.9	150 700 C2I/53.1	236 000 C2I/52.1	302 300 C2I/53.1	393 200 C2I/51.3	491 500 C2I/51.3	554 300 C2I/50.5			
	50	1 430 ICI/49	2 540 ICI/50.9	2 990 ICI/50.9	5 290 ICI/53	6 080 ICI/53	11 200 ICI/49.9	22 500 ICI/50	28 500 ICI/49.3	50 750 ICI/52.5	67 300 ICI/50.8	99 800 ICI/52.5	–	–	–	–	–	–			
									34.1	59	71.7	119	136	220	271	–	–	–	45	2800	**63**
	45	–	–	–	–	–	–	–	34 650 C2I/45.1	60 550 C2I/45.6	73 350 C2I/45.4	124 600 C2I/46.6	146 700 C2I/47.8	233 600 C2I/47.1	289 200 C2I/47.5	366 600 C2I/44.2	456 300 C2I/44.2	578 500 C2I/45.4			
									34.6	54.5	67.9	110	142	203	280	–	–	–	40	2500	
	40	–	–	–	–	–	–	–	33 750 C2I/38.7	54 300 C2I/39.5	70 200 C2I/41	117 900 C2I/42.6	148 700 C2I/41.4	219 600 C2I/42.8	293 200 C2I/41.6	371 600 C2I/39.5	462 500 C2I/39.5	586 400 C2I/41			
		1.61	2.57	3.2	5.25	6.07	13.9	23.3	26.5	56.4	56.7	107							40	2500	
	40	1 560 ICI/38.6	2 600 ICI/40.1	3 240 ICI/40.1	5 530 ICI/41.8	6 400 ICI/41.8	13 800 ICI/39.4	23 100 ICI/39.4	26 850 ICI/40.2	58 800 ICI/41.4	59 450 ICI/41.6	111 200 ICI/41.4	–	–	–	–	–	–			

For n_1 lower than 560 rpm see page 195.

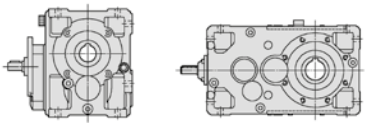

$n_{N2} \cdot L_h$ rpm · h	i_N	50	63	64	80	81	100	125	140	160	180	200	225	250	280	320	321	360	i_N	n_1 rpm	n_{N2}
		Nominal output power P_{N2} [hp] Nominal output torque T_{N2} [lb in] Train of gears / ratio … / i																			
800 000	35.5	–	–	–	–	–	–	–	33.7 35 550 C2I/37.5	50.4 53 150 C2I/37.5	71.7 75 300 C2I/37.3	108 107 100 C2I/35.3	145 147 700 C2I/36.2	205 215 100 C2I/37.2	281 297 100 C2I/37.5	369 376 500 C2I/36.3	459 468 600 C2I/36.3	566 594 100 C2I/37.3	35.5	2240	63
	31.5	–	–	–	–	–	–	–	34.7 34 950 C2I/32	56.8 59 200 C2I/33.1	76.2 79 800 C2I/33.2	109 117 600 C2I/34.2	140 148 400 C2I/33.7	226 235 900 C2I/33.1	288 305 800 C2I/33.7	387 381 700 C2I/31.3	481 475 000 C2I/31.3	588 602 200 C2I/32.5	31.5	2000	
	31.5	1.62 1 640 ICI/32.1	2.65 2 750 ICI/33	3.25 3 380 ICI/33	5.17 5 130 ICI/31.4	5.68 5 630 ICI/31.4	12.2 12 650 ICI/32.8	21.4 21 800 ICI/32.4	–	46.6 46 050 ICI/31.4	–	96.2 99 100 ICI/32.7	–	–	–	–	–	–	31.5	2000	
	31.5	–	2.04 2 010 CI/31.3	2.27 2 230 CI/31.3	3.99 4 080 CI/32.5	4.96 5 080 CI/32.5	9.69 9 200 CI/30.1	18.1 17 850 CI/31.3	–	35.4 34 350 CI/30.8	–	72.4 70 200 CI/30.8	–	137 137 500 CI/31.7	–	–	–	–	31.5	2000	
	28	–	–	–	–	–	–	–	36.5 36 500 C2I/28.6	63.6 64 400 C2I/28.9	79.5 80 200 C2I/28.8	121 125 000 C2I/29.5	146 154 600 C2I/30.3	231 241 300 C2I/29.9	289 304 900 C2I/30.1	394 386 500 C2I/28 ▲	491 481 000 C2I/28 ▲	605 609 800 C2I/28.8 ▲	28	1800	
	25	–	–	–	–	–	–	–	35.9 34 700 C2I/24.5	65.9 65 100 C2I/25.1	73.2 75 000 C2I/26	117 124 500 C2I/27	149 154 200 C2I/26.3	236 252 700 C2I/27.2	298 309 200 C2I/26.4	397 392 000 C2I/25.1	494 487 800 C2I/25.1	604 618 500 C2I/26	25	1600	
	25	1.39 1 320 CI/24.1	2.23 2 200 CI/25	2.82 2 770 CI/25	4.87 4 990 CI/26	5.55 5 680 CI/26	9.98 9 470 CI/24.1	22 21 700 CI/25	–	43 41 700 CI/24.6	–	84.5 81 950 CI/24.6	–	168 167 700 CI/25.4	–	–	–	–	25	1600	
	22.4	–	–	–	–	–	–	–	34.8 37 250 C2I/23.8	60 64 200 C2I/23.8	74.1 78 950 C2I/23.7	124 124 900 C2I/22.4	151 156 200 C2I/23	227 241 400 C2I/23.6	290 311 200 C2I/23.8	381 394 600 C2I/23	474 491 300 C2I/23	585 622 600 C2I/23.7	22.4	1400	
	20	–	–	–	–	–	–	–	31.8 32 700 C2I/20.4	55.5 57 550 C2I/20.6	68.1 73 350 C2I/21.4	115 118 600 C2I/20.5	136 136 700 C2I/19.9	215 232 900 C2I/21.5	268 281 600 C2I/20.8	382 397 100 C2I/20.6	476 494 200 C2I/20.6	536 577 600 C2I/21.4	20	1250	
	20	1.36 1 320 CI/19.3	2.35 2 370 CI/20	2.89 2 920 CI/20	4.82 5 050 CI/20.8	5.56 5 830 CI/20.8	12.2 11 850 CI/19.3	21.2 21 400 CI/20	30 30 250 CI/20	47.9 47 550 CI/19.7	59.2 60 500 CI/20.3	94.4 93 750 CI/19.7	118 120 900 CI/20.3	183 187 500 CI/20.3	237 238 900 CI/20	309 307 000 CI/19.7	427 424 400 CI/19.7	480 491 200 CI/20.3	20	1250	
	18	–	–	–	–	–	–	–	29.9 30 250 CI/18	47.9 48 500 CI/18	59.7 62 750 CI/18.7	95.4 96 700 CI/18	118 124 300 CI/18.7	191 192 300 CI/17.9	237 240 000 CI/18	292 295 600 CI/18	412 416 900 CI/18	470 486 800 CI/18.4	18	1120	
	16	1.38 1 320 CI/15.2	2.39 2 370 CI/15.8	2.93 2 920 CI/15.8	4.88 5 050 CI/16.4	5.64 5 830 CI/16.4	12.2 11 700 CI/15.2	22.7 22 600 CI/15.8	31.9 31 650 CI/15.8	50.7 49 600 CI/15.5	63.9 64 450 CI/16	102 100 100 CI/15.5	143 144 000 CI/16	197 198 800 CI/16	259 257 000 CI/15.8	301 308 500 CI/16.3	380 389 800 CI/16.3	494 498 000 CI/16	16	1000	
	14	–	–	–	–	–	–	–	32.7 32 500 CI/14.2	51.7 51 450 CI/14.2	65.4 67 350 CI/14.7	103 102 100 CI/14.2	136 140 000 CI/14.7	207 204 100 CI/14.1	258 256 000 CI/14.2	334 332 300 CI/14.2	398 395 500 CI/14.2	510 518 000 CI/14.5	14	900	
	12.5	1.6 1 560 CI/12.4	2.69 2 670 CI/12.6	3.39 3 370 CI/12.6	5.67 5 870 CI/13.1	6.56 6 790 CI/13.1	12 11 700 CI/12.4	25 24 900 CI/12.6	29.3 29 750 CI/12.9	51.7 53 100 CI/13	58.7 60 600 CI/13.1	103 105 500 CI/13	121 122 600 CI/12.8	205 204 200 CI/12.6	231 234 300 CI/12.9	313 315 800 CI/12.8	383 387 000 CI/12.8	473 470 500 CI/12.6	12.5	800	
	11.2	–	–	–	–	–	–	–	33.5 33 450 CI/11.3	46.4 47 000 CI/11.4	68.7 71 150 CI/11.7	92.1 92 100 CI/11.3	140 144 800 CI/11.7	184 186 500 CI/11.4	277 277 000 CI/11.3	328 321 600 CI/11	410 402 000 CI/11	515 525 300 CI/11.5	11.2	710	
	10	1.59 1 640 CI/10.3	2.76 2 770 CI/10	3.39 3 390 CI/10	5.63 5 870 CI/10.4	6.52 6 790 CI/10.4	12.4 12 150 CI/9.81	26.3 26 250 CI/10	29.9 30 550 CI/10.2	49.2 50 900 CI/10.3	63 65 450 CI/10.4	113 116 800 CI/10.3	124 126 500 CI/10.2	199 199 100 CI/10	248 253 400 CI/10.2	350 356 200 CI/10.2	427 434 200 CI/10.2	494 494 300 CI/10	10	630	
	9	–	–	–	–	–	–	–	35 35 500 CI/9	50.4 51 250 CI/9.04	66.8 70 150 CI/9.33	110 110 600 CI/8.93	139 146 100 CI/9.33	199 202 800 CI/9.04	263 266 800 CI/9	351 346 100 CI/8.75	444 437 000 CI/8.75	508 525 900 CI/9.2	9	560	
710 000	200	–	–	–	–	–	7 300 ICI/192	17 000 ICI/199	–	33 500 ICI/196	–	67 650 ICI/196	–	–	–	–	–	–			

For n_1 lower than 560 rpm see page 195.
▲ Possible forced lubrication with heat exchanger: consult us.

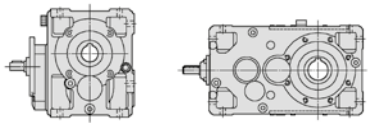

$n_{N2} \cdot L_h$ rpm · h	i_N	50	63	64	80	81	100	125	140	160	180	200	225	250	280	320	321	360	i_N	n_1 rpm	n_{N2}
		Nominal output power P_{N2} [hp] Nominal output torque T_{N2} [lb in] Train of gears / ratio ... / i																			
710 000	160	–	–	–	–	–	–	–	29 000 C2I/151	43 700 C2I/154	61 500 C2I/158	90 000 C2I/151	122 000 C2I/156	180 000 C2I/156	245 200 C2I/154	307 000 C2I/156	365 000 C2I/156	483 500 C2I/161			
	160	–	–	–	–	–	10 000 ICI/154	20 000 ICI/159	21 450 ICI/159	41 900 ICI/157	48 300 ICI/162	73 100 ICI/157	–	–	–	–	–	–			
	125	–	–	–	–	–	–	–	28 850 C2I/123	53 000 C2I/129	65 350 C2I/130	109 000 C2I/127	126 600 C2I/125	189 500 C2I/123	219 300 C2I/125	333 100 C2I/129	416 300 C2I/129	436 700 C2I/127			
	125	–	–	–	–	–	10 600 ICI/123	21 200 ICI/127	26 350 ICI/127	46 200 ICI/126	62 050 ICI/130	95 000 ICI/126	–	–	–	–	–	–			
	100	–	–	–	–	–	–	–	30 900 C2I/98.2	56 000 C2I/103	69 600 C2I/104	115 000 C2I/102	134 900 C2I/100	202 000 C2I/98.5	258 800 C2I/100	362 900 C2I/103	453 600 C2I/103	517 500 C2I/102			
	100	–	2 110 ICI/99.4	2 510 ICI/99.4	4 350 ICI/103	5 100 ICI/103	11 200 ICI/100	22 650 ICI/102	27 050 ICI/100	50 950 ICI/106	63 000 ICI/102	100 200 ICI/106	–	–	–	–	–	–			
	90	–	–	–	–	–	–	–	32 300 C2I/87.8	56 400 C2I/90.4	63 750 C2I/90	110 200 C2I/87.9	136 900 C2I/90.3	195 400 C2I/89	269 900 C2I/89.7	342 100 C2I/88.8	425 800 C2I/88.8	539 800 C2I/91.4			
	80	–	–	–	–	–	–	–	31 700 C2I/78.6	59 000 C2I/82.7	67 350 C2I/83.1	117 200 C2I/81.4	134 700 C2I/80.2	194 800 C2I/78.8	265 600 C2I/80.3	348 900 C2I/82.6	436 100 C2I/82.6	531 200 C2I/81.2			
	80	1 330 ICI/75.2	2 110 ICI/79.5	2 640 ICI/79.5	4 670 ICI/82.7	5 490 ICI/82.7	10 650 ICI/76.7	20 200 ICI/78.1	23 200 ICI/78.1	40 800 ICI/78.1	46 700 ICI/80.5	83 900 ICI/78.1	–	–	–	–	–	–			
	71	–	–	–	–	–	–	–	33 200 C2I/70.2	53 450 C2I/72.3	64 700 C2I/72	105 000 C2I/70.3	140 500 C2I/72.2	200 700 C2I/71.2	277 200 C2I/71.7	351 400 C2I/71.1	437 300 C2I/71.1	554 400 C2I/73.1			
	63	–	–	–	–	–	–	–	32 650 C2I/62	59 400 C2I/65.2	80 050 C2I/65.5	117 800 C2I/64.2	157 500 C2I/63.2	236 400 C2I/62.1	306 400 C2I/63.3	407 700 C2I/65.1	509 600 C2I/65.1	546 500 C2I/64			
	63	1 330 ICI/60.1	2 150 ICI/63.6	2 650 ICI/63.6	4 670 ICI/66.2	5 490 ICI/66.2	11 900 ICI/61.3	22 650 ICI/62.5	28 100 ICI/62.5	49 800 ICI/62.5	62 050 ICI/64.4	100 500 ICI/62.5	–	–	–	–	–	–			
	56	–	–	–	–	–	–	–	34 150 C2I/55.4	61 500 C2I/57	70 900 C2I/56.8	125 300 C2I/55.5	147 000 C2I/56.9	241 800 C2I/56.1	287 700 C2I/56.6	384 700 C2I/56	480 900 C2I/56	570 400 C2I/57.6			
									29.6	50.6	65.5	97.3	131	202	257	–	–	–	50	2800	56
	50	–	–	–	–	–	–	–	33 550 C2I/50.4	59 400 C2I/52.1	77 300 C2I/52.4	118 100 C2I/53.9	156 100 C2I/53.1	236 800 C2I/52.1	307 000 C2I/53.1	407 400 C2I/51.3	509 200 C2I/51.3	562 200 C2I/50.5			
		1.3	2.23	2.62	4.56	5.11	9.98	20.3	26.1	43.1	61	84.8							50	2800	
	50	1 440 ICI/49	2 550 ICI/50.9	3 000 ICI/50.9	5 450 ICI/53	6 100 ICI/53	11 200 ICI/49.9	22 800 ICI/50	28 900 ICI/49.3	50 950 ICI/52.5	69 700 ICI/50.8	100 200 ICI/52.5	–	–	–	–	–	–			
									30.9	54.5	64.9	107	123	203	245	–	–	–	45	2500	
	45	–	–	–	–	–	–	–	35 100 C2I/45.1	62 650 C2I/45.6	74 350 C2I/45.4	125 500 C2I/46.6	148 700 C2I/47.8	241 700 C2I/47.1	293 200 C2I/47.5	371 600 C2I/44.2	462 500 C2I/44.2	586 400 C2I/45.4			
									31.4	50.4	61.6	102	129	188	254	339	421	515	40	2240	
	40	–	–	–	–	–	–	–	34 200 C2I/38.7	56 100 C2I/39.5	71 100 C2I/41	121 900 C2I/42.6	150 600 C2I/41.4	227 000 C2I/42.8	297 100 C2I/41.6	376 500 C2I/39.5	468 600 C2I/39.5	594 100 C2I/41			
		1.44	2.33	2.88	4.77	5.51	12.5	21.1	24.1	51	52.2	95.8							40	2240	
	40	1 570 ICI/38.6	2 640 ICI/40.1	3 250 ICI/40.1	5 610 ICI/41.8	6 490 ICI/41.8	13 850 ICI/39.4	23 450 ICI/39.4	27 200 ICI/40.2	59 400 ICI/41.4	61 050 ICI/41.6	111 600 ICI/41.4	–	–	–	–	–	–			

For n_1 lower than 560 rpm see page 195.

9 - Bevel helical gear reducer selection tables

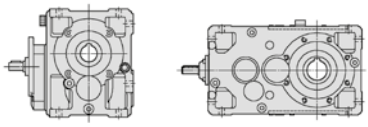

$n_{N2} \cdot L_h$ rpm · h	i_N	50	63	64	80	81	100	125	140	160	180	200	225	250	280	320	321	360	i_N	n_1 rpm	n_{N2}
		Nominal output power P_{N2} [hp] Nominal output torque T_{N2} [lb in] Train of gears / ratio … / i																			
710 000	35.5	–	–	–	–	–	–	–	30.5 36 050 C2I/37.5	46.6 55 000 C2I/37.5	64.9 76 350 C2I/37.3	97.6 108 600 C2I/35.3	131 149 700 C2I/36.2	186 218 000 C2I/37.2	255 301 100 C2I/37.5	334 381 700 C2I/36.3	416 475 000 C2I/36.3	512 602 200 C2I/37.3	35.5	2000	56
	31.5	–	–	–	–	–	–	–	31.6 35 400 C2I/32	51.3 59 400 C2I/33.1	68.8 80 050 C2I/33.2	98.6 118 000 C2I/34.2	128 150 300 C2I/33.7	204 236 700 C2I/33.1	260 306 800 C2I/33.7	352 386 500 C2I/31.3	438 481 000 C2I/31.3	536 609 800 C2I/32.5	31.5	1800	
	31.5	1.46 1 650 ICI/32.1	2.46 2 840 ICI/33	2.94 3 390 ICI/33	4.72 5 190 ICI/31.4	5.18 5 700 ICI/31.4	11.2 12 850 ICI/32.8	19.5 22 050 ICI/32.4	–	42.5 46 650 ICI/31.4	–	86.8 99 450 ICI/32.7	–	–	–	–	–	–	31.5	1800	
	31.5	–	1.84 2 020 CI/31.3	2.05 2 240 CI/31.3	3.6 4 100 CI/32.5	4.48 5 100 CI/32.5	8.75 9 230 CI/30.1	16.4 17 950 CI/31.3	–	32 34 500 CI/30.8	–	65.3 70 400 CI/30.8	–	128 141 900 CI/31.7	–	–	–	–	31.5	1800	
	28	–	–	–	–	–	–	–	32.9 37 000 C2I/28.6	56.7 64 650 C2I/28.9	73.2 83 100 C2I/28.8	108 125 500 C2I/29.5	131 156 800 C2I/30.3	206 242 200 C2I/29.9	261 309 200 C2I/30.1	355 392 000 C2I/28	442 487 800 C2I/28	545 618 500 C2I/28.8	28	1600	
	25	–	–	–	–	–	–	–	31.9 35 250 C2I/24.5	58.5 66 000 C2I/25.1	66.7 78 100 C2I/26	107 129 500 C2I/27	133 156 700 C2I/26.3	208 253 800 C2I/27.2	265 314 200 C2I/26.4	353 398 300 C2I/25.1	439 495 600 C2I/25.1	537 628 400 C2I/26	25	1400	
	25	1.22 1 330 CI/24.1	1.98 2 230 CI/25	2.5 2 820 CI/25	4.33 5 070 CI/26	4.93 5 770 CI/26	8.86 9 610 CI/24.1	19.4 21 800 CI/25	–	37.8 41 900 CI/24.6	–	75.1 83 250 CI/24.6	–	149 170 400 CI/25.4	–	–	–	–	25	1400	
	22.4	–	–	–	–	–	–	–	31.2 37 500 C2I/23.8	54 64 750 C2I/23.8	66.6 79 400 C2I/23.7	111 125 400 C2I/22.4	136 157 800 C2I/23	203 242 300 C2I/23.6	261 313 100 C2I/23.8	342 397 100 C2I/23	426 494 200 C2I/23	525 626 500 C2I/23.7	22.4	1250	
	20	–	–	–	–	–	–	–	28.6 32 900 C2I/20.4	51.3 59 500 C2I/20.6	61.6 74 050 C2I/21.4	106 122 600 C2I/20.5	123 138 100 C2I/19.9	199 240 700 C2I/21.5	243 284 400 C2I/20.8	344 398 300 C2I/20.6	428 495 600 C2I/20.6	485 583 400 C2I/21.4	20	1120	
	20	1.22 1 330 CI/19.3	2.11 2 380 CI/20	2.6 2 930 CI/20	4.33 5 070 CI/20.8	5 5 850 CI/20.8	11 11 900 CI/19.3	19.6 22 100 CI/20	27.1 30 500 CI/20	44.3 49 150 CI/19.7	53.6 61 200 CI/20.3	85.1 94 300 CI/19.7	107 122 200 CI/20.3	165 188 600 CI/20.3	214 241 300 CI/20	278 308 400 CI/19.7	384 425 900 CI/19.7	437 498 600 CI/20.3	20	1120	
	18	–	–	–	–	–	–	–	26.7 30 250 CI/18	43.2 48 950 CI/18	53.3 62 750 CI/18.7	86 97 600 CI/18	106 124 300 CI/18.7	172 194 200 CI/17.9	212 240 000 CI/18	263 298 300 CI/18	380 431 000 CI/18	420 486 800 CI/18.4	18	1000	
	16	1.25 1 330 CI/15.2	2.15 2 380 CI/15.8	2.65 2 930 CI/15.8	4.41 5 060 CI/16.4	5.09 5 850 CI/16.4	11.2 11 900 CI/15.2	20.5 22 650 CI/15.8	28.8 31 800 CI/15.8	45.7 49 750 CI/15.5	57.8 64 800 CI/16	92.3 100 400 CI/15.5	129 144 700 CI/16	183 205 200 CI/16	234 258 600 CI/15.8	273 311 200 CI/16.3	353 402 300 CI/16.3	459 514 000 CI/16	16	900	
	14	–	–	–	–	–	–	–	29.3 32 800 CI/14.2	47.7 53 300 CI/14.2	58.7 68 050 CI/14.7	93.5 104 500 CI/14.2	121 140 000 CI/14.7	185 205 300 CI/14.1	231 258 600 CI/14.2	300 335 600 CI/14.2	366 409 700 CI/14.2	458 523 100 CI/14.5	14	800	
	12.5	1.43 1 570 CI/12.4	2.4 2 690 CI/12.6	3.02 3 380 CI/12.6	5.05 5 890 CI/13.1	5.84 6 820 CI/13.1	10.8 11 850 CI/12.4	23 25 800 CI/12.6	26.3 30 050 CI/12.9	46.4 53 750 CI/13	52.6 61 200 CI/13.1	92.1 106 600 CI/13	108 123 100 CI/12.8	184 206 300 CI/12.6	207 236 800 CI/12.9	280 318 900 CI/12.8	343 390 800 CI/12.8	435 487 600 CI/12.6	12.5	710	
	11.2	–	–	–	–	–	–	–	29.9 33 650 CI/11.3	42.7 48 700 CI/11.4	61.4 71 650 CI/11.7	82.6 93 050 CI/11.3	124 144 800 CI/11.7	165 188 400 CI/11.4	248 279 700 CI/11.3	294 324 800 CI/11	368 406 000 CI/11	461 530 500 CI/11.5	11.2	630	
	10	1.42 1 650 CI/10.3	2.46 2 770 CI/10	3.02 3 400 CI/10	5.03 5 890 CI/10.4	5.81 6 820 CI/10.4	11.1 12 250 CI/9.81	23.3 26 250 CI/10	26.6 30 550 CI/10.2	45.3 52 700 CI/10.3	56.5 66 050 CI/10.4	100 116 800 CI/10.3	111 127 700 CI/10.2	179 201 000 CI/10	223 255 800 CI/10.2	314 359 700 CI/10.2	382 437 000 CI/10.2	444 499 700 CI/10	10	560	
630 000	200	–	–	–	–	–	7 500 ICI/192	17 500 ICI/199	–	34 500 ICI/196	–	70 000 ICI/196	–	–	–	–	–	–			
	160	–	–	–	–	–	–	–	30 000 C2I/151	45 000 C2I/154	63 000 C2I/158	92 500 C2I/151	128 000 C2I/156	185 000 C2I/156	254 000 C2I/154	315 000 C2I/156	375 000 C2I/156	500 900 C2I/161			

For n_1 lower than 560 rpm see page 195.

9 - Bevel helical gear reducer selection tables

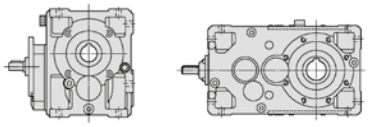

$n_{N2} \cdot L_h$ rpm · h	i_N	50	63	64	80	81	100	125	140	160	180	200	225	250	280	320	321	360	i_N	n_1 rpm	n_{N2}
		Nominal output power P_{N2} [hp] Nominal output torque T_{N2} [lb in] Train of gears / ratio … / i																			
630 000	160	–	–	–	–	–	10 300 ICI/154	20 600 ICI/159	22 200 ICI/159	42 050 ICI/157	48 500 ICI/162	75 450 ICI/157	–	–	–	–	–	–			
	125	–	–	–	–	–	–	–	29 900 C2I/123	54 500 C2I/129	67 700 C2I/130	112 000 C2I/127	131 200 C2I/125	196 400 C2I/123	225 100 C2I/125	345 200 C2I/129	431 500 C2I/129	448 300 C2I/127			
	125	–	–	–	–	–	10 900 ICI/123	21 800 ICI/127	27 350 ICI/127	47 500 ICI/126	62 300 ICI/130	97 500 ICI/126	–	–	–	–	–	–			
	100	–	–	–	–	–	–	–	31 750 C2I/98.2	58 000 C2I/103	72 000 C2I/104	118 300 C2I/102	139 500 C2I/100	208 900 C2I/98.5	262 300 C2I/100	375 400 C2I/103	469 300 C2I/103	524 600 C2I/102			
	100	–	2 120 ICI/99.4	2 520 ICI/99.4	4 360 ICI/103	5 120 ICI/103	11 250 ICI/100	23 450 ICI/102	28 000 ICI/100	51 150 ICI/106	65 000 ICI/102	100 500 ICI/106	–	–	–	–	–	–			
	90	–	–	–	–	–	–	–	32 700 C2I/87.8	58 200 C2I/90.4	64 550 C2I/90	113 700 C2I/87.9	138 600 C2I/90.3	197 900 C2I/89	273 300 C2I/89.7	346 500 C2I/88.8	431 100 C2I/88.8	546 600 C2I/91.4			
	80	–	–	–	–	–	–	–	32 150 C2I/78.6	59 600 C2I/82.7	68 300 C2I/83.1	118 300 C2I/81.4	136 600 C2I/80.2	201 800 C2I/78.8	269 400 C2I/80.3	361 400 C2I/82.6	451 800 C2I/82.6	538 800 C2I/81.2			
	80	1 330 ICI/75.2	2 120 ICI/79.5	2 650 ICI/79.5	4 680 ICI/82.7	5 510 ICI/82.7	10 700 ICI/76.7	20 950 ICI/78.1	23 550 ICI/78.1	41 400 ICI/78.1	47 350 ICI/80.5	85 100 ICI/78.1	–	–	–	–	–	–			
	71	–	–	–	–	–	–	–	33 650 C2I/70.2	55 400 C2I/72.3	65 650 C2I/72	108 800 C2I/70.3	142 600 C2I/72.2	203 500 C2I/71.2	281 200 C2I/71.7	356 400 C2I/71.1	443 500 C2I/71.1	562 300 C2I/73.1			
	63	–	–	–	–	–	–	–	33 100 C2I/62	59 600 C2I/65.2	80 350 C2I/65.5	118 300 C2I/64.2	163 300 C2I/63.2	237 300 C2I/62.1	307 500 C2I/63.3	409 200 C2I/65.1	511 500 C2I/65.1	554 300 C2I/64			
	63	1 330 ICI/60.1	2 190 ICI/63.6	2 690 ICI/63.6	4 690 ICI/66.2	5 510 ICI/66.2	11 950 ICI/61.3	22 750 ICI/62.5	28 500 ICI/62.5	49 950 ICI/62.5	62 300 ICI/64.4	100 800 ICI/62.5	–	–	–	–	–	–			
									27.8	49.1	55.7	101	119	192	234	–	–	–	56	2800	50
	56	–	–	–	–	–	–	–	34 650 C2I/55.4	63 000 C2I/57	71 150 C2I/56.8	125 800 C2I/55.5	152 300 C2I/56.9	242 700 C2I/56.1	298 100 C2I/56.6	386 200 C2I/56	482 700 C2I/56	578 500 C2I/57.6			
									26.8	45.4	60.5	87.2	121	181	230	–	–	–	50	2500	
	50	–	–	–	–	–	–	–	34 050 C2I/50.4	59 650 C2I/52.1	79 950 C2I/52.4	118 500 C2I/53.9	161 500 C2I/53.1	237 700 C2I/52.1	308 100 C2I/53.1	409 100 C2I/51.3	511 400 C2I/51.3	569 900 C2I/50.5			
		1.17	2	2.34	4.09	4.58	8.94	18.3	23.6	38.6	56.4	76.2							50	2500	
	50	1 440 ICI/49	2 560 ICI/50.9	3 010 ICI/50.9	5 470 ICI/53	6 120 ICI/53	11 250 ICI/49.9	23 100 ICI/50	29 300 ICI/49.3	51 150 ICI/52.5	72 150 ICI/50.8	100 800 ICI/52.5	–	–	–	–	–	–			
									28	50.4	58.9	96.1	112	183	224	303	377	465	45	2240	
	45	–	–	–	–	–	–	–	35 550 C2I/45.1	64 750 C2I/45.6	75 300 C2I/45.4	125 900 C2I/46.6	150 600 C2I/47.8	243 100 C2I/47.1	299 200 C2I/47.5	376 500 C2I/44.2	468 600 C2I/44.2	594 100 C2I/45.4			
									28.4	46.6	55.8	94	117	174	230	306	381	466	40	2000	
	40	–	–	–	–	–	–	–	34 650 C2I/38.7	58 050 C2I/39.5	72 050 C2I/41	126 100 C2I/42.6	152 700 C2I/41.4	234 800 C2I/42.8	301 100 C2I/41.6	381 700 C2I/39.5	475 000 C2I/39.5	602 200 C2I/41			
		1.29	2.11	2.59	4.31	4.99	11.2	19.1	21.8	45.7	48.2	85.9							40	2000	
	40	1 570 ICI/38.6	2 670 ICI/40.1	3 280 ICI/40.1	5 680 ICI/41.8	6 570 ICI/41.8	13 900 ICI/39.4	23 750 ICI/39.4	27 550 ICI/40.2	59 600 ICI/41.4	63 150 ICI/41.6	112 000 ICI/41.4	–	–	–	–	–	–			
									27.8	43.3	59.2	89	119	169	232	304	379	467	35.5	1800	
	35.5	–	–	–	–	–	–	–	36 500 C2I/37.5	56 800 C2I/37.5	77 300 C2I/37.3	109 900 C2I/35.3	151 600 C2I/36.2	220 700 C2I/37.2	304 900 C2I/37.5	386 500 C2I/36.3	481 000 C2I/36.3	609 800 C2I/37.3			

For n_1 lower than 560 rpm see page 195.

9 - Bevel helical gear reducer selection tables

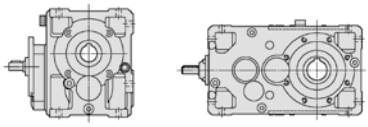

$n_{N2} \cdot L_h$ rpm · h	i_N	50	63	64	80	81	100	125	140	160	180	200	225	250	280	320	321	360	i_N	n_1 rpm	n_{N2}
		Nominal output power P_{N2} [hp] Nominal output torque T_{N2} [lb in] Train of gears / ratio ... / i																			
630 000	31.5	–	–	–	–	–	–	–	28.5 35 900 C2I/32	45.8 59 600 C2I/33.1	61.4 80 350 C2I/33.2	88 118 400 C2I/34.2	117 155 100 C2I/33.7	182 237 600 C2I/33.1	232 308 000 C2I/33.7	318 392 000 C2I/31.3	395 487 800 C2I/31.3	483 618 500 C2I/32.5	31.5	1600	50
	31.5	1.3 1 650 ICI/32.1	2.23 2 900 ICI/33	2.62 3 400 ICI/33	4.25 5 270 ICI/31.4	4.67 5 780 ICI/31.4	10 12 900 ICI/32.8	17.5 22 400 ICI/32.4	–	38.3 47 300 ICI/31.4	–	77.5 99 800 ICI/32.7	–	–	–	–	–	–	31.5	1600	
	31.5	–	1.64 2 020 CI/31.3	1.83 2 250 CI/31.3	3.21 4 110 CI/32.5	4 5 120 CI/32.5	7.81 9 260 CI/30.1	14.6 18 000 CI/31.3	–	28.6 34 600 CI/30.8	–	58.3 70 650 CI/30.8	–	117 146 200 CI/31.7	–	–	–	–	31.5	1600	
	28	–	–	–	–	–	–	–	29.1 37 500 C2I/28.6	49.8 64 900 C2I/28.9	66.7 86 500 C2I/28.8	94.8 126 000 C2I/29.5	117 159 300 C2I/30.3	181 243 200 C2I/29.9	232 314 700 C2I/30.1	316 398 300 C2I/28	393 495 600 C2I/28	485 628 400 C2I/28.8	28	1400	
	25	–	–	–	–	–	–	–	28.7 35 500 C2I/24.5	52.4 66 250 C2I/25.1	60.3 79 100 C2I/26	96.7 131 700 C2I/27	119 157 700 C2I/26.3	186 254 700 C2I/27.2	236 314 200 C2I/26.4	315 398 300 C2I/25.1	392 495 600 C2I/25.1	479 628 400 C2I/26	25	1250	
	25	1.1 1 330 CI/24.1	1.78 2 240 CI/25	2.25 2 830 CI/25	3.88 5 080 CI/26	4.43 5 800 CI/26	7.95 9 660 CI/24.1	17.3 21 850 CI/25	–	33.9 42 050 CI/24.6	–	67.7 84 100 CI/24.6	–	135 172 200 CI/25.4	–	–	–	–	25	1250	
	22.4	–	–	–	–	–	–	–	28 37 500 C2I/23.8	48.6 64 950 C2I/23.8	59.8 79 650 C2I/23.7	99.9 125 800 C2I/22.4	123 159 300 C2I/23	183 243 100 C2I/23.6	235 314 200 C2I/23.8	308 398 300 C2I/23	383 495 600 C2I/23	472 628 400 C2I/23.7	22.4	1120	
	20	–	–	–	–	–	–	–	25.7 33 050 C2I/20.4	47.4 61 550 C2I/20.6	55.5 74 700 C2I/21.4	98.3 126 800 C2I/20.5	111 139 500 C2I/19.9	184 249 000 C2I/21.5	219 287 400 C2I/20.8	307 398 300 C2I/20.6	382 495 600 C2I/20.6	438 589 400 C2I/21.4	20	1000	
	20	1.1 1 330 CI/19.3	1.89 2 390 CI/20	2.33 2 940 CI/20	3.88 5 080 CI/20.8	4.48 5 870 CI/20.8	9.83 11 950 CI/19.3	18.1 22 750 CI/20	24.5 30 850 CI/20	40.2 49 950 CI/19.7	48.4 61 850 CI/20.3	76.4 94 850 CI/19.7	96.5 123 400 CI/20.3	148 189 700 CI/20.3	193 243 800 CI/20	250 309 900 CI/19.7	344 427 400 CI/19.7	391 500 400 CI/20.3	20	1000	
	18	–	–	–	–	–	–	–	24 30 250 CI/18	39.2 49 400 CI/18	48 62 750 CI/18.7	78.1 98 500 CI/18	95.1 124 300 CI/18.7	157 195 900 CI/17.9	190 240 000 CI/18	239 300 900 CI/18	342 431 000 CI/18	378 486 800 CI/18.4	18	900	
	16	1.11 1 330 CI/15.2	1.92 2 390 CI/15.8	2.36 2 940 CI/15.8	3.93 5 080 CI/16.4	4.54 5 870 CI/16.4	9.97 11 950 CI/15.2	18.3 22 750 CI/15.8	25.7 31 900 CI/15.8	40.8 49 950 CI/15.5	53.3 67 100 CI/16	82.4 100 800 CI/15.5	115 145 000 CI/16	163 206 000 CI/16	210 260 300 CI/15.8	245 314 200 CI/16.3	315 404 100 CI/16.3	423 532 500 CI/16	16	800	
	14	–	–	–	–	–	–	–	26.3 33 150 CI/14.2	43.8 55 250 CI/14.2	52.6 68 750 CI/14.7	86 108 300 CI/14.2	107 140 000 CI/14.7	165 206 600 CI/14.1	207 261 400 CI/14.2	269 338 900 CI/14.2	337 424 600 CI/14.2	411 529 400 CI/14.5	14	710	
	12.5	1.27 1 570 CI/12.4	2.14 2 700 CI/12.6	2.69 3 400 CI/12.6	4.5 5 910 CI/13.1	5.2 6 840 CI/13.1	9.92 12 250 CI/12.4	21.2 26 750 CI/12.6	23.6 30 350 CI/12.9	42.2 55 000 CI/13	47.5 62 200 CI/13.1	82.6 107 700 CI/13	96.1 123 500 CI/12.8	165 208 400 CI/12.6	186 239 200 CI/12.9	251 322 000 CI/12.8	310 397 800 CI/12.8	391 493 300 CI/12.6	12.5	630	
	11.2	–	–	–	–	–	–	–	26.7 33 850 CI/11.3	39.3 50 500 CI/11.4	54.9 72 100 CI/11.7	74.1 94 000 CI/11.3	110 144 800 CI/11.7	148 190 300 CI/11.4	223 282 400 CI/11.3	264 327 900 CI/11	330 409 900 CI/11	414 535 600 CI/11.5	11.2	560	
560 000	200	–	–	–	–	–	7 750 ICI/192	18 000 ICI/199	–	35 500 ICI/196	–	72 250 ICI/196	–	–	–	–	–	–			
	160	–	–	–	–	–	–	–	30 700 C2I/151	46 200 C2I/154	65 000 C2I/158	95 000 C2I/151	132 000 C2I/156	190 000 C2I/156	263 200 C2I/154	325 000 C2I/156	387 000 C2I/156	519 200 C2I/161			
	160	–	–	–	–	–	10 750 ICI/154	21 200 ICI/159	23 050 ICI/159	42 200 ICI/157	48 700 ICI/162	77 500 ICI/157	–	–	–	–	–	–			
	125	–	–	–	–	–	–	–	31 000 C2I/123	56 000 C2I/129	70 150 C2I/130	115 000 C2I/127	135 900 C2I/125	203 500 C2I/123	231 200 C2I/125	357 600 C2I/129	447 100 C2I/129	460 600 C2I/127			

For n_1 lower than 560 rpm see page 195.

9 - Bevel helical gear reducer selection tables

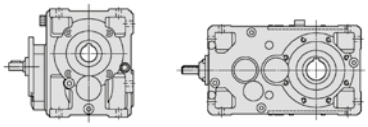

$n_{N2} \cdot L_h$ rpm · h	i_N	50	63	64	80	81	100	125	140	160	180	200	225	250	280	320	321	360	i_N	n_1 rpm	n_{N2}
		Nominal output power P_{N2} [hp] Nominal output torque T_{N2} [lb in] Train of gears / ratio … / i																			
560 000	125	–	–	–	–	–	11 200 ICI/123	22 400 ICI/127	28 300 ICI/127	48 700 ICI/126	62 550 ICI/130	101 200 ICI/126	–	–	–	–	–	–			
	100	–	–	–	–	–	–	–	32 750 C2I/98.2	58 000 C2I/103	74 300 C2I/104	118 700 C2I/102	144 000 C2I/100	215 600 C2I/98.5	265 600 C2I/100	387 500 C2I/103	484 400 C2I/103	531 200 C2I/102			
	100	–	2 120 ICI/99.4	2 530 ICI/99.4	4 380 ICI/103	5 140 ICI/103	11 300 ICI/100	24 200 ICI/102	28 900 ICI/100	51 300 ICI/106	65 000 ICI/102	100 900 ICI/106	–	–	–	–	–	–			
	90	–	–	–	–	–	–	–	33 200 C2I/87.8	60 300 C2I/90.4	66 700 C2I/90	117 800 C2I/87.9	140 500 C2I/90.3	201 900 C2I/89	277 200 C2I/89.7	351 400 C2I/88.8	437 300 C2I/88.8	554 400 C2I/91.4			
	80	–	–	–	–	–	–	–	32 650 C2I/78.6	59 850 C2I/82.7	70 750 C2I/83.1	118 700 C2I/81.4	138 600 C2I/80.2	209 200 C2I/78.8	273 200 C2I/80.3	374 600 C2I/82.6	468 300 C2I/82.6	546 500 C2I/81.2			
	80	1 340 ICI/75.2	2 150 ICI/79.5	2 660 ICI/79.5	4 700 ICI/82.7	5 530 ICI/82.7	10 700 ICI/76.7	21 700 ICI/78.1	23 850 ICI/78.1	42 000 ICI/78.1	48 000 ICI/80.5	86 350 ICI/78.1	–	–	–	–	–	–			
	71	–	–	–	–	–	–	–	34 150 C2I/70.2	57 450 C2I/72.3	66 600 C2I/72	112 700 C2I/70.3	144 600 C2I/72.2	206 500 C2I/71.2	285 200 C2I/71.7	361 500 C2I/71.1	449 900 C2I/71.1	570 400 C2I/73.1			
									24.1	40.8	54.7	82.2	119	170	217	–	–	–	63	2800	45
	63	–	–	–	–	–	–	–	33 550 C2I/62	59 850 C2I/65.2	80 650 C2I/65.5	118 700 C2I/64.2	169 200 C2I/63.2	238 100 C2I/62.1	308 700 C2I/63.3	410 700 C2I/65.1	513 400 C2I/65.1	573 900 C2I/64			
		0.99	1.55	1.91	3.17	3.71	8.68	16.2	20.6	35.6	43.1	71.9							63	2800	
	63	1 340 ICI/60.1	2 220 ICI/63.6	2 730 ICI/63.6	4 730 ICI/66.2	5 530 ICI/66.2	12 000 ICI/61.3	22 850 ICI/62.5	28 900 ICI/62.5	50 150 ICI/62.5	62 500 ICI/64.4	101 200 ICI/62.5	–	–	–	–	–	–			
									25.1	43.8	49.9	90.3	110	172	216	–	–	–	56	2500	
	56	–	–	–	–	–	–	–	35 100 C2I/55.4	63 000 C2I/57	71 400 C2I/56.8	126 200 C2I/55.5	157 600 C2I/56.9	243 600 C2I/56.1	308 400 C2I/56.6	387 500 C2I/56	484 400 C2I/56	586 400 C2I/57.6			
									24.3	40.8	54.7	78.4	112	163	207	284	355	407	50	2240	
	50	–	–	–	–	–	–	–	34 500 C2I/50.4	59 850 C2I/52.1	80 650 C2I/52.4	118 900 C2I/53.9	167 000 C2I/53.1	238 500 C2I/52.1	309 100 C2I/53.1	410 500 C2I/51.3	513 200 C2I/51.3	577 400 C2I/50.5			
		1.05	1.8	2.11	3.68	4.12	8.04	16.7	21.4	34.9	50.9	69.2							50	2240	
	50	1 450 ICI/49	2 570 ICI/50.9	3 020 ICI/50.9	5 480 ICI/53	6 140 ICI/53	11 300 ICI/49.9	23 450 ICI/50	29 700 ICI/49.3	51 450 ICI/52.5	72 800 ICI/50.8	102 200 ICI/52.5	–	–	–	–	–	–			
									25.4	45.3	53.3	86.1	103	164	207	278	348	421	45	2000	
	45	–	–	–	–	–	–	–	36 050 C2I/45.1	65 100 C2I/45.6	76 350 C2I/45.4	126 400 C2I/46.6	155 600 C2I/47.8	244 000 C2I/47.1	309 500 C2I/47.5	387 400 C2I/44.2	484 200 C2I/44.2	602 200 C2I/45.4			
									25.9	43.3	50.8	87.3	107	162	210	279	348	425	40	1800	
	40	–	–	–	–	–	–	–	35 100 C2I/38.7	59 900 C2I/39.5	73 000 C2I/41	130 100 C2I/42.6	154 600 C2I/41.4	242 400 C2I/42.8	304 900 C2I/41.6	386 500 C2I/39.5	481 000 C2I/39.5	609 800 C2I/41			
		1.17	1.92	2.36	3.93	4.55	10.1	17.4	19.8	41.3	44.8	77.5							40	1800	
	40	1 580 ICI/38.6	2 710 ICI/40.1	3 320 ICI/40.1	5 750 ICI/41.8	6 660 ICI/41.8	13 900 ICI/39.4	24 050 ICI/39.4	27 900 ICI/40.2	59 800 ICI/41.4	65 200 ICI/41.6	112 300 ICI/41.4	–	–	–	–	–	–			
									25	39.9	53.3	80.4	108	153	209	274	341	421	35.5	1600	
	35.5	–	–	–	–	–	–	–	37 000 C2I/37.5	58 800 C2I/37.5	78 400 C2I/37.3	111 700 C2I/35.3	153 700 C2I/36.2	223 900 C2I/37.2	309 200 C2I/37.5	392 000 C2I/36.3	487 800 C2I/36.3	618 500 C2I/37.3			
									25.3	40.2	53.9	77.3	107	160	204	282	351	429	31.5	1400	
	31.5	–	–	–	–	–	–	–	36 450 C2I/32	59 850 C2I/33.1	80 700 C2I/33.2	118 900 C2I/34.2	161 500 C2I/33.7	238 600 C2I/33.1	309 300 C2I/33.7	398 300 C2I/31.3	495 600 C2I/31.3	628 400 C2I/32.5			
		1.15	1.96	2.3	3.78	4.15	8.79	15.6		34		68.1							31.5	1400	
	31.5	1 660 ICI/32.1	2 910 ICI/33	3 420 ICI/33	5 350 ICI/31.4	5 870 ICI/31.4	12 950 ICI/32.8	22 750 ICI/32.4	–	48 050 ICI/31.4	–	100 200 ICI/32.7	–	–	–	–	–	–			

For n_1 lower than 560 rpm see page 195.

9 - Bevel helical gear reducer selection tables

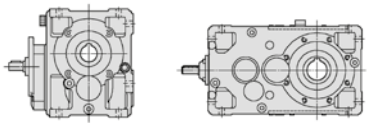

$n_{N2} \cdot L_h$ rpm · h	i_N	50	63	64	80	81	100	125	140	160	180	200	225	250	280	320	321	360	i_N	n_1 rpm	n_{N2}
		Nominal output power P_{N2} [hp] Nominal output torque T_{N2} [lb in] Train of gears / ratio … / i																			
560 000	31.5	–	1.45 2 030 CI/31.3	1.61 2 260 CI/31.3	2.82 4 130 CI/32.5	3.51 5 140 CI/32.5	6.86 9 300 CI/30.1	12.8 18 050 CI/31.3	–	25.1 34 750 CI/30.8	–	51.2 70 950 CI/30.8	–	103 146 800 CI/31.7	–	–	–	–	31.5	1400	45
	28	–	–	–	–	–	–	–	26 37 500 C2I/28.6	44.7 65 150 C2I/28.9	60.3 87 650 C2I/28.8	84.9 126 500 C2I/29.5	104 159 300 C2I/30.3	162 244 100 C2I/29.9	214 325 600 C2I/30.1	282 398 300 C2I/28	351 495 600 C2I/28	433 628 400 C2I/28.8	28	1250	
	25	–	–	–	–	–	–	–	25.9 35 700 C2I/24.5	47.1 66 450 C2I/25.1	54.3 79 400 C2I/26	87 132 200 C2I/27	107 158 800 C2I/26.3	167 255 500 C2I/27.2	212 314 200 C2I/26.4	282 398 300 C2I/25.1	351 495 600 C2I/25.1	429 628 400 C2I/26	25	1120	
	25	0.99 1 340 CI/24.1	1.6 2 250 CI/25	2.02 2 850 CI/25	3.49 5 100 CI/26	3.99 5 830 CI/26	7.15 9 700 CI/24.1	15.6 21 950 CI/25	–	30.6 42 450 CI/24.6	–	61.3 84 850 CI/24.6	–	122 174 000 CI/25.4	–	–	–	–	25	1120	
	22.4	–	–	–	–	–	–	–	25 37 500 C2I/23.8	43.5 65 200 C2I/23.8	53.4 79 650 C2I/23.7	89.5 126 200 C2I/22.4	110 159 300 C2I/23	164 244 000 C2I/23.6	209 314 200 C2I/23.8	275 398 300 C2I/23	342 495 600 C2I/23	421 628 400 C2I/23.7	22.4	1000	
	20	–	–	–	–	–	–	–	23.2 33 200 C2I/20.4	44.1 63 550 C2I/20.6	50.2 75 150 C2I/21.4	91.3 130 900 C2I/20.5	101 140 800 C2I/19.9	170 255 400 C2I/21.5	199 290 100 C2I/20.8	276 398 300 C2I/20.6	344 495 600 C2I/20.6	398 595 000 C2I/21.4	20	900	
	20	0.99 1 340 CI/19.3	1.71 2 390 CI/20	2.1 2 950 CI/20	3.5 5 100 CI/20.8	4.04 5 890 CI/20.8	8.88 12 000 CI/19.3	16.3 22 850 CI/20	22.2 31 050 CI/20	36.3 50 100 CI/19.7	44 62 500 CI/20.3	69.1 95 350 CI/19.7	87.7 124 600 CI/20.3	134 190 700 CI/20.3	176 246 100 CI/20	226 311 200 CI/19.7	311 428 900 CI/19.7	353 502 000 CI/20.3	20	900	
	18	–	–	–	–	–	–	–	21.3 30 250 CI/18	35.1 49 850 CI/18	42.7 62 750 CI/18.7	70.1 99 450 CI/18	84.5 124 300 CI/18.7	141 197 800 CI/17.9	169 240 000 CI/18	214 303 700 CI/18	304 431 000 CI/18	336 486 800 CI/18.4	18	800	
	16	0.99 1 340 CI/15.2	1.71 2 390 CI/15.8	2.1 2 950 CI/15.8	3.5 5 100 CI/16.4	4.05 5 890 CI/16.4	8.88 12 000 CI/15.2	16.3 22 850 CI/15.8	22.9 32 000 CI/15.8	36.4 50 100 CI/15.5	49 69 550 CI/16	73.4 101 100 CI/15.5	102 145 000 CI/16	145 206 000 CI/16	187 262 100 CI/15.8	220 317 300 CI/16.3	281 405 600 CI/16.3	389 551 900 CI/16	16	710	
	14	–	–	–	–	–	–	–	23.6 33 500 CI/14.2	40.3 57 150 CI/14.2	47.5 69 900 CI/14.7	76.8 109 100 CI/14.2	95.1 140 000 CI/14.7	147 207 800 CI/14.1	186 264 100 CI/14.2	241 342 300 CI/14.2	308 437 000 CI/14.2	378 548 700 CI/14.5	14	630	
	12.5	1.14 1 580 CI/12.4	1.91 2 720 CI/12.6	2.4 3 410 CI/12.6	4.01 5 930 CI/13.1	4.64 6 860 CI/13.1	9.13 12 700 CI/12.4	19.2 27 200 CI/12.6	21.7 31 350 CI/12.9	38.8 57 000 CI/13	43.7 64 450 CI/13.1	74.1 108 800 CI/13	85.8 124 000 CI/12.8	148 210 500 CI/12.6	167 241 700 CI/12.9	225 325 000 CI/12.8	277 400 000 CI/12.8	347 493 300 CI/12.6	12.5	560	
500 000	200	–	–	–	–	–	8 000 ICI/192	18 500 ICI/199	–	36 500 ICI/196	–	74 850 ICI/196	–	–	–	–	–	–			
	160	–	–	–	–	–	–	–	32 100 C2I/151	47 500 C2I/154	67 000 C2I/158	97 500 C2I/151	132 000 C2I/156	195 000 C2I/156	272 800 C2I/154	335 000 C2I/156	400 000 C2I/156	538 100 C2I/161			
	160	–	–	–	–	–	10 750 ICI/154	22 000 ICI/159	23 850 ICI/159	42 350 ICI/157	48 850 ICI/162	79 600 ICI/157	–	–	–	–	–	–			
	125	–	–	–	–	–	–	–	32 050 C2I/123	58 000 C2I/129	72 600 C2I/130	115 000 C2I/127	140 600 C2I/125	210 500 C2I/123	238 400 C2I/125	370 000 C2I/129	462 500 C2I/129	466 900 C2I/127			
	125	–	–	–	–	–	11 200 ICI/123	22 950 ICI/127	29 300 ICI/127	50 350 ICI/126	62 750 ICI/130	101 600 ICI/126	–	–	–	–	–	–			
	100	–	–	–	–	–	–	–	33 950 C2I/98.2	58 000 C2I/103	76 950 C2I/104	119 100 C2I/102	149 200 C2I/100	223 400 C2I/98.5	269 400 C2I/100	401 400 C2I/103	501 800 C2I/103	538 800 C2I/102			
	100	–	2 130 ICI/99.4	2 540 ICI/99.4	4 390 ICI/103	5 160 ICI/103	11 350 ICI/100	25 050 ICI/102	29 950 ICI/100	51 500 ICI/106	65 000 ICI/102	101 200 ICI/106	–	–	–	–	–	–			

For n_1 lower than 560 rpm see page 195.

9 - Bevel helical gear reducer selection tables

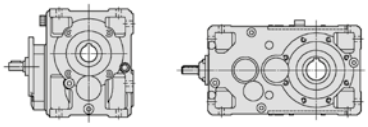

$n_{N2} \cdot L_h$ rpm · h	i_N	50	63	64	80	81	100	125	140	160	180	200	225	250	280	320	321	360	i_N	n_1 rpm	n_{N2}
		Nominal output power P_{N2} [hp] Nominal output torque T_{N2} [lb in] Train of gears / ratio … / i																			
500 000	90	–	–	–	–	–	–	–	33 650 C2I/87.8	61 500 C2I/90.4	69 150 C2I/90	122 100 C2I/87.9	142 600 C2I/90.3	209 300 C2I/89	281 200 C2I/89.7	358 100 C2I/88.8	447 600 C2I/88.8	562 300 C2I/91.4			
	80	–	–	–	–	–	–	–	33 100 C2I/78.6	60 050 C2I/82.7	73 350 C2I/83.1	119 200 C2I/81.4	142 800 C2I/80.2	216 800 C2I/78.8	277 200 C2I/80.3	388 300 C2I/82.6	485 400 C2I/82.6	554 300 C2I/81.2			
	80	1 340 ICI/75.2	2 190 ICI/79.5	2 690 ICI/79.5	4 720 ICI/82.7	5 550 ICI/82.7	10 750 ICI/76.7	22 000 ICI/78.1	24 200 ICI/78.1	42 600 ICI/78.1	48 700 ICI/80.5	87 550 ICI/78.1	–	–	–	–	–	–			
	71	–	–	–	–	–	–	–	21.9 34 650 C2I/70.2	36.6 59 500 C2I/72.3	41.7 67 500 C2I/72	73.8 116 800 C2I/70.3	90.2 146 700 C2I/72.2	131 209 400 C2I/71.2	179 289 200 C2I/71.7	– 366 600 C2I/71.1	– 456 300 C2I/71.1	– 578 500 C2I/73.1	71	2800	40
	63	–	–	–	–	–	–	–	21.8 34 050 C2I/62	36.5 60 050 C2I/65.2	49 80 950 C2I/65.5	73.6 119 100 C2I/64.2	107 170 100 C2I/63.2	153 239 000 C2I/62.1	194 309 800 C2I/63.3	– 412 200 C2I/65.1	– 515 200 C2I/65.1	– 593 800 C2I/64	63	2500	
	63	0.89 1 340 ICI/60.1	1.4 2 250 ICI/63.6	1.72 2 770 ICI/63.6	2.87 4 790 ICI/66.2	3.33 5 550 ICI/66.2	7.78 12 050 ICI/61.3	14.5 22 900 ICI/62.5	18.6 29 300 ICI/62.5	31.9 50 350 ICI/62.5	38.6 62 750 ICI/64.4	64.5 101 600 ICI/62.5	–	–	–	–	–	–	63	2500	
	56	–	–	–	–	–	–	–	22.8 35 550 C2I/55.4	40.7 65 350 C2I/57	44.9 71 650 C2I/56.8	81.2 126 600 C2I/55.5	102 162 900 C2I/56.9	155 244 400 C2I/56.1	200 318 700 C2I/56.6	247 388 900 C2I/56	308 486 100 C2I/56	366 594 100 C2I/57.6	56	2240	
	50	–	–	–	–	–	–	–	22 34 950 C2I/50.4	36.5 60 050 C2I/52.1	49 80 950 C2I/52.4	70.3 119 300 C2I/53.9	102 170 300 C2I/53.1	146 239 400 C2I/52.1	185 310 200 C2I/53.1	255 412 000 C2I/51.3	319 515 000 C2I/51.3	368 585 200 C2I/50.5	50	2000	
	50	0.94 1 450 ICI/49	1.61 2 580 ICI/50.9	1.89 3 030 ICI/50.9	3.29 5 500 ICI/53	3.69 6 160 ICI/53	7.2 11 350 ICI/49.9	15.1 23 750 ICI/50	19.4 30 100 ICI/49.3	31.5 52 150 ICI/52.5	45.7 73 050 ICI/50.8	62.6 103 600 ICI/52.5	–	–	–	–	–	–	50	2000	
	45	–	–	–	–	–	–	–	23.1 36 500 C2I/45.1	40.9 65 350 C2I/45.6	48.6 77 300 C2I/45.4	77.8 126 800 C2I/46.6	95.9 160 600 C2I/47.8	148 244 800 C2I/47.1	192 319 500 C2I/47.5	251 388 600 C2I/44.2	314 485 800 C2I/44.2	383 609 800 C2I/45.4	45	1800	
	40	–	–	–	–	–	–	–	23.4 35 600 C2I/38.7	39.9 62 050 C2I/39.5	45.8 74 000 C2I/41	79 132 600 C2I/42.6	96.1 156 800 C2I/41.4	149 251 100 C2I/42.8	189 309 200 C2I/41.6	252 392 000 C2I/39.5	313 487 800 C2I/39.5	383 618 500 C2I/41	40	1600	
	40	1.04 1 590 ICI/38.6	1.74 2 740 ICI/40.1	2.13 3 370 ICI/40.1	3.54 5 840 ICI/41.8	4.1 6 750 ICI/41.8	9.01 14 000 ICI/39.4	15.7 24 400 ICI/39.4	17.9 28 300 ICI/40.2	36.8 60 050 ICI/41.4	41.2 67 550 ICI/41.6	69.2 112 800 ICI/41.4	–	–	–	–	–	–	40	1600	
	35.5	–	–	–	–	–	–	–	22.3 37 600 C2I/37.5	36.3 61 250 C2I/37.5	47.4 79 650 C2I/37.3	73.2 116 300 C2I/35.3	95.7 156 200 C2I/36.2	136 227 500 C2I/37.2	186 314 200 C2I/37.5	244 398 300 C2I/36.3	304 495 600 C2I/36.3	374 628 400 C2I/37.3	35.5	1400	
	31.5	–	–	–	–	–	–	–	22.6 36 450 C2I/32	36 60 100 C2I/33.1	48.3 80 950 C2I/33.2	69.3 119 400 C2I/34.2	98.4 167 000 C2I/33.7	144 239 500 C2I/33.1	183 310 400 C2I/33.7	252 398 300 C2I/31.3	314 495 600 C2I/31.3	383 628 400 C2I/32.5	31.5	1250	
	31.5	1.03 1 670 ICI/32.1	1.76 2 920 ICI/33	2.06 3 430 ICI/33	3.4 5 400 ICI/31.4	3.72 5 900 ICI/31.4	7.87 13 000 ICI/32.8	13.9 22 750 ICI/32.4	– ICI/31.4	30.7 48 500	– ICI/32.7	61 100 600	–	–	–	–	–	–	31.5	1250	
	31.5	– CI/31.3	1.3 2 040 CI/31.3	1.44 2 270 CI/32.5	2.53 4 150 CI/32.5	3.15 5 160 CI/30.1	6.15 9 340 CI/31.3	11.5 18 150	– CI/30.8	22.5 34 900	– CI/30.8	45.9 71 200	– CI/31.7	92.1 147 300	–	–	–	–	31.5	1250	
	28	–	–	–	–	–	–	–	23.3 37 500 C2I/28.6	40.2 65 350 C2I/28.9	54.3 87 950 C2I/28.8	76.4 126 900 C2I/29.5	93.4 159 300 C2I/30.3	146 244 900 C2I/29.9	199 336 500 C2I/30.1	253 398 300 C2I/28	315 495 600 C2I/28	388 628 400 C2I/28.8	28	1120	
	25	–	–	–	–	–	–	–	23.2 35 900 C2I/24.5	42.2 66 700 C2I/25.1	48.6 79 650 C2I/26	77.9 132 600 C2I/27	96.3 159 300 C2I/26.3	150 256 500 C2I/27.2	189 314 200 C2I/26.4	252 398 300 C2I/25.1	314 495 600 C2I/25.1	383 628 400 C2I/26	25	1000	

For n_1 lower than 560 rpm see page 195.

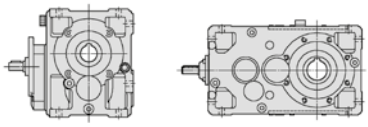

$n_{N2} \cdot L_h$ rpm · h	i_N	50	63	64	80	81	100	125	140	160	180	200	225	250	280	320	321	360	i_N	n_1 rpm	n_{N2}
		Nominal output power P_{N2} [hp] Nominal output torque T_{N2} [lb in] Train of gears / ratio … / i																			
500 000	25	0.88 1 340 CI/24.1	1.44 2 270 CI/25	1.82 2 860 CI/25	3.12 5 120 CI/26	3.58 5 860 CI/26	6.42 9 750 CI/24.1	14 22 000 CI/25	–	27.6 42 850 CI/24.6	–	55.5 86 100 CI/24.6	–	110 175 800 CI/25.4	–	–	–	–	25	1000	**40**
	22.4	–	–	–	–	–	–	–	22.5 37 500 C2I/23.8	39.3 65 400 C2I/23.8	49 81 100 C2I/23.7	80.8 126 700 C2I/22.4	99 159 300 C2I/23	148 244 800 C2I/23.6	190 316 600 C2I/23.8	247 398 300 C2I/23	308 495 600 C2I/23	379 628 400 C2I/23.7	22.4	900	
	20	–	–	–	–	–	–	–	20.8 33 400 C2I/20.4	40.6 65 800 C2I/20.6	45.1 75 850 C2I/21.4	81.8 132 000 C2I/20.5	90.7 142 200 C2I/19.9	152 256 400 C2I/21.5	179 293 100 C2I/20.8	246 398 300 C2I/20.6	306 495 600 C2I/20.6	357 601 200 C2I/21.4	20	800	
	20	0.88 1 340 CI/19.3	1.52 2 400 CI/20	1.88 2 960 CI/20	3.12 5 120 CI/20.8	3.61 5 910 CI/20.8	7.92 12 000 CI/19.3	14.5 22 900 CI/20	19.8 31 250 CI/20	32.4 50 300 CI/19.7	39.6 63 250 CI/20.3	61.8 95 950 CI/19.7	78.8 125 900 CI/20.3	120 191 900 CI/20.3	158 248 700 CI/20	202 312 800 CI/19.7	277 430 500 CI/19.7	315 503 900 CI/20.3	20	800	
	18	–	–	–	–	–	–	–	18.9 30 250 CI/18	31.5 50 300 CI/18	37.9 62 750 CI/18.7	62.9 100 400 CI/18	75 124 300 CI/18.7	126 199 800 CI/17.9	150 240 000 CI/18	192 306 600 CI/18	270 431 000 CI/18	298 486 800 CI/18.4	18	710	
	16	0.88 1 340 CI/15.2	1.52 2 400 CI/15.8	1.87 2 960 CI/15.8	3.12 5 120 CI/16.4	3.6 5 910 CI/16.4	7.91 12 000 CI/15.2	14.5 22 900 CI/15.8	20.4 32 150 CI/15.8	32.4 50 300 CI/15.5	45.1 72 100 CI/16	65.4 101 500 CI/15.5	90.6 145 000 CI/16	129 206 000 CI/16	168 265 700 CI/15.8	197 320 300 CI/16.3	250 407 100 CI/16.3	358 572 100 CI/16	16	630	
	14	–	–	–	–	–	–	–	21.7 34 600 CI/14.2	35.9 57 350 CI/14.2	43.7 72 400 CI/14.7	68.6 109 500 CI/14.2	84.5 140 000 CI/14.7	132 208 900 CI/14.1	167 266 800 CI/14.2	216 345 600 CI/14.2	274 437 000 CI/14.2	347 567 300 CI/14.5	14	560	
450 000	200	–	–	–	–	–	8 250 ICI/192	19 000 ICI/199	–	37 500 ICI/196	–	75 000 ICI/196	–	–	–	–	–	–			
	160	–	–	–	–	–	–	–	32 200 C2I/151	48 700 C2I/154	69 000 C2I/158	101 800 C2I/151	136 000 C2I/156	200 000 C2I/156	272 000 C2I/154	345 000 C2I/156	412 000 C2I/156	557 500 C2I/161			
	160	–	–	–	–	–	10 800 ICI/154	22 100 ICI/159	24 750 ICI/159	42 500 ICI/157	49 050 ICI/162	81 750 ICI/157	–	–	–	–	–	–			
	125	–	–	–	–	–	–	–	33 100 C2I/123	58 000 C2I/129	74 900 C2I/130	119 500 C2I/127	145 100 C2I/125	217 300 C2I/123	246 100 C2I/125	381 900 C2I/129	477 400 C2I/129	472 800 C2I/127			
	125	–	–	–	–	–	11 500 ICI/123	23 000 ICI/127	30 250 ICI/127	50 500 ICI/126	62 950 ICI/130	101 900 ICI/126	–	–	–	–	–	–			
	100	–	–	–	–	–	–	–	35 200 C2I/98.2	60 250 C2I/103	79 750 C2I/104	119 500 C2I/102	154 600 C2I/100	231 500 C2I/98.5	273 200 C2I/100	413 600 C2I/103	517 000 C2I/103	546 500 C2I/102			
	100	–	2 140 ICI/99.4	2 550 ICI/99.4	4 410 ICI/103	5 180 ICI/103	11 400 ICI/100	25 600 ICI/102	31 050 ICI/100	51 700 ICI/106	67 000 ICI/102	101 600 ICI/106	–	–	–	–	–	–			
	90	–	–	–	–	–	–	–	34 150 C2I/87.8	61 500 C2I/90.4	71 650 C2I/90	126 500 C2I/87.9	144 600 C2I/90.3	216 900 C2I/89	285 200 C2I/89.7	371 200 C2I/88.8	463 900 C2I/88.8	570 400 C2I/91.4			
	80	–	–	–	–	–	–	–	19 33 550 C2I/78.6	32.4 60 300 C2I/82.7	40.6 75 950 C2I/83.1	65.3 119 600 C2I/81.4	82 148 000 C2I/80.2	127 224 600 C2I/78.8	156 281 100 C2I/80.3	– 402 300 C2I/82.6	– 502 800 C2I/82.6	– 562 200 C2I/81.2	80	2800	**35.5**
	80	0.8 1 350 ICI/75.2	1.24 2 220 ICI/79.5	1.52 2 730 ICI/79.5	2.54 4 740 ICI/82.7	2.99 5 570 ICI/82.7	6.26 10 800 ICI/76.7	12.6 22 100 ICI/78.1	14 24 550 ICI/78.1	24.6 43 200 ICI/78.1	27.3 49 400 ICI/80.5	50.5 88 800 ICI/78.1	–	–	–	–	–	–	80	2800	
	71	–	–	–	–	–	–	–	19.8 35 100 C2I/70.2	33.8 61 550 C2I/72.3	37.7 68 450 C2I/72	68.2 120 800 C2I/70.3	81.7 148 700 C2I/72.2	118 212 300 C2I/71.2	162 293 200 C2I/71.7	– 371 600 C2I/71.1	– 462 500 C2I/71.1	– 586 400 C2I/73.1	71	2500	

For n_1 lower than 560 rpm see page 195.

9 - Bevel helical gear reducer selection tables

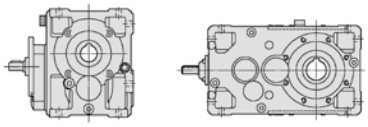

$n_{N2} \cdot L_h$ rpm · h	i_N	50	63	64	80	81	100	125	140	160	180	200	225	250	280	320	321	360	i_N	n_1 rpm	n_{N2}
		Nominal output power P_{N2} [hp] Nominal output torque T_{N2} [lb in] Train of gears / ratio … / i																			
450 000	63	–	–	–	–	–	–	–	19.9 34 700 C2I/62	32.9 60 250 C2I/65.2	44.1 81 200 C2I/65.5	66.2 119 500 C2I/64.2	95.9 170 600 C2I/63.2	137 239 800 C2I/62.1	175 310 800 C2I/63.3	226 413 600 C2I/65.1	282 517 000 C2I/65.1	341 613 700 C2I/64	63	2240	35.5
	63	0.8 1 350 ICI/60.1	1.27 2 280 ICI/63.6	1.57 2 800 ICI/63.6	2.61 4 850 ICI/66.2	3.01 5 610 ICI/66.2	7 12 050 ICI/61.3	13.1 23 000 ICI/62.5	16.9 29 700 ICI/62.5	28.7 50 500 ICI/62.5	34.7 62 950 ICI/64.4	58 101 900 ICI/62.5	–	–	–	–	–	–	63	2240	
	56	–	–	–	–	–	–	–	20.7 36 050 C2I/55.4	36.5 65 550 C2I/57	40.2 71 900 C2I/56.8	72.7 127 100 C2I/55.5	93.9 168 500 C2I/56.9	139 245 300 C2I/56.1	185 329 700 C2I/56.6	221 390 300 C2I/56	276 487 800 C2I/56	331 602 200 C2I/57.6	56	2000	
	50	–	–	–	–	–	–	–	20 35 400 C2I/50.4	33 60 250 C2I/52.1	44.3 81 200 C2I/52.4	63.4 119 700 C2I/53.9	91.9 170 900 C2I/53.1	132 240 100 C2I/52.1	167 311 300 C2I/53.1	230 413 400 C2I/51.3	288 516 700 C2I/51.3	336 593 900 C2I/50.5	50	1800	
	50	0.85 1 460 ICI/49	1.45 2 590 ICI/50.9	1.71 3 040 ICI/50.9	2.97 5 520 ICI/53	3.33 6 190 ICI/53	6.51 11 350 ICI/49.9	13.8 24 250 ICI/50	17.7 30 500 ICI/49.3	28.7 52 800 ICI/52.5	41.2 73 300 ICI/50.8	57.1 104 900 ICI/52.5	–	–	–	–	–	–	50	1800	
	45	–	–	–	–	–	–	–	20.9 37 000 C2I/45.1	36.5 65 550 C2I/45.6	44.3 79 250 C2I/45.4	69.4 127 300 C2I/46.6	88.3 166 300 C2I/47.8	132 245 700 C2I/47.1	177 330 900 C2I/47.5	225 392 000 C2I/44.2	280 487 800 C2I/44.2	346 618 500 C2I/45.4	45	1600	
	40	–	–	–	–	–	–	–	20.8 36 150 C2I/38.7	36.3 64 600 C2I/39.5	40.7 75 200 C2I/41	69.4 133 100 C2I/42.6	85.5 159 300 C2I/41.4	133 257 400 C2I/42.8	168 314 200 C2I/41.6	224 398 300 C2I/39.5	279 495 600 C2I/39.5	340 628 400 C2I/41	40	1400	
	40	0.92 1 590 ICI/38.6	1.54 2 790 ICI/40.1	1.9 3 430 ICI/40.1	3.15 5 930 ICI/41.8	3.64 6 860 ICI/41.8	7.92 14 050 ICI/39.4	14 24 800 ICI/39.4	15.9 28 750 ICI/40.2	32.4 60 300 ICI/41.4	37.6 70 300 ICI/41.6	60.8 113 200 ICI/41.4	–	–	–	–	–	–	40	1400	
	35.5	–	–	–	–	–	–	–	19.9 37 600 C2I/37.5	33.5 63 350 C2I/37.5	42.3 79 650 C2I/37.3	67.6 120 300 C2I/35.3	86.4 157 800 C2I/36.2	125 235 200 C2I/37.2	169 319 300 C2I/37.5	218 398 300 C2I/36.3	271 495 600 C2I/36.3	334 628 400 C2I/37.3	35.5	1250	
	31.5	–	–	–	–	–	–	–	20.3 36 450 C2I/32	32.4 60 300 C2I/33.1	43.4 81 250 C2I/33.2	62.3 119 800 C2I/34.2	90.3 171 000 C2I/33.7	129 240 300 C2I/33.1	164 311 500 C2I/33.7	226 398 300 C2I/31.3	281 496 300 C2I/31.3	344 628 400 C2I/32.5	31.5	1120	
	31.5	0.92 1 670 ICI/32.1	1.58 2 930 ICI/33	1.85 3 430 ICI/33	3.07 5 440 ICI/31.4	3.38 5 970 ICI/31.4	7.08 13 050 ICI/32.8	12.5 22 750 ICI/32.4	–	27.7 48 900 ICI/31.4	–	54.8 100 900 ICI/32.7	–	–	–	–	–	–	31.5	1120	
	31.5	–	1.16 2 050 CI/31.3	1.29 2 280 CI/31.3	2.27 4 160 CI/32.5	2.83 5 180 CI/32.5	5.53 9 370 CI/30.1	10.4 18 200 CI/31.3	–	20.2 35 000 CI/30.8	–	41.3 71 450 CI/30.8	–	82.8 147 900 CI/31.7	–	–	–	–	31.5	1120	
	28	–	–	–	–	–	–	–	20.8 37 500 C2I/28.6	36 65 600 C2I/28.9	48.6 88 250 C2I/28.8	68.4 127 300 C2I/29.5	84.2 160 800 C2I/30.3	130 245 800 C2I/29.9	183 348 100 C2I/30.1	226 398 300 C2I/28	281 495 600 C2I/28	346 628 400 C2I/28.8	28	1000	
	25	–	–	–	–	–	–	–	21 36 150 C2I/24.5	38.1 66 950 C2I/25.1	43.9 79 950 C2I/26	70.4 133 100 C2I/27	86.6 159 300 C2I/26.3	135 257 300 C2I/27.2	170 314 400 C2I/26.4	227 398 300 C2I/25.1	282 495 600 C2I/25.1	345 628 400 C2I/26	25	900	
	25	0.8 1 350 CI/24.1	1.3 2 280 CI/25	1.64 2 870 CI/25	2.82 5 130 CI/26	3.23 5 890 CI/26	5.8 9 790 CI/24.1	12.6 22 100 CI/25	–	25.1 43 200 CI/24.6	–	50.1 86 450 CI/24.6	–	99.8 177 500 CI/25.4	–	–	–	–	25	900	
	22.4	–	–	–	–	–	–	–	20 37 500 C2I/23.8	35.1 65 650 C2I/23.8	45.1 84 050 C2I/23.7	72.1 127 100 C2I/22.4	88 159 300 C2I/23	132 245 700 C2I/23.6	175 328 000 C2I/23.8	220 398 300 C2I/23	274 495 600 C2I/23	337 628 400 C2I/23.7	22.4	800	
	20	–	–	–	–	–	–	–	18.5 33 600 C2I/20.4	36.7 67 000 C2I/20.6	41.5 78 600 C2I/21.4	72.6 132 000 C2I/20.5	81.3 143 700 C2I/19.9	135 257 000 C2I/21.5	161 297 500 C2I/20.8	218 398 300 C2I/20.6	271 495 600 C2I/20.6	320 607 500 C2I/21.4	20	710	
	20	0.79 1 350 CI/19.3	1.36 2 410 CI/20	1.67 2 960 CI/20	2.78 5 130 CI/20.8	3.21 5 930 CI/20.8	7.05 12 050 CI/19.3	13 23 000 CI/20	17.7 31 400 CI/20	28.9 50 500 CI/19.7	35.5 63 950 CI/20.3	56 97 900 CI/19.7	70.7 127 300 CI/20.3	108 194 400 CI/20.3	142 251 400 CI/20	180 314 300 CI/19.7	247 432 100 CI/19.7	281 505 800 CI/20.3	20	710	

For n_1 lower than 560 rpm see page 195.

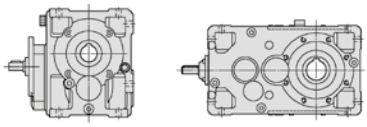

$n_{N2} \cdot L_h$ rpm · h	i_N	50	63	64	80	81	100	125	140	160	180	200	225	250	280	320	321	360	i_N	n_1 rpm	n_{N2}
		Nominal output power P_{N2} [hp] Nominal output torque T_{N2} [lb in] Train of gears / ratio … / i																			
450 000	18	–	–	–	–	–	–	–	16.8 30 250 CI/18	28.2 50 800 CI/18	33.6 62 750 CI/18.7	56.3 101 400 CI/18	66.5 124 300 CI/18.7	113 201 800 CI/17.9	133 240 000 CI/18	172 309 500 CI/18	239 431 000 CI/18	264 486 800 CI/18.4	18	630	**35.5**
	16	0.79 1 350 CI/15.2	1.36 2 410 CI/15.8	1.67 2 960 CI/15.8	2.78 5 130 CI/16.4	3.21 5 930 CI/16.4	7.06 12 050 CI/15.2	13 23 000 CI/15.8	18.2 32 250 CI/15.8	28.9 50 500 CI/15.5	40.6 73 000 CI/16	58.3 101 900 CI/15.5	80.5 145 000 CI/16	114 206 000 CI/16	155 275 200 CI/15.8	177 323 400 CI/16.3	223 408 600 CI/16.3	329 592 700 CI/16	16	560	
400 000	200	–	–	–	–	–	8 500 ICI/192	19 500 ICI/199	–	39 350 ICI/196	–	77 500 ICI/196	–	–	–	–	–	–			
	160	–	–	–	–	–	–	–	32 300 C2I/151	48 700 C2I/154	69 000 C2I/158	102 200 C2I/151	140 000 C2I/156	200 000 C2I/156	282 800 C2I/154	345 000 C2I/156	412 000 C2I/156	560 000 C2I/161			
	160	–	–	–	–	–	10 850 ICI/154	22 200 ICI/159	24 850 ICI/159	42 650 ICI/157	49 200 ICI/162	83 650 ICI/157	–	–	–	–	–	–			
	125	–	–	–	–	–	–	–	34 300 C2I/123	58 000 C2I/129	77 600 C2I/130	119 900 C2I/127	145 000 C2I/125	225 100 C2I/123	254 900 C2I/125	395 600 C2I/129	494 500 C2I/129	486 400 C2I/127			
	125	–	–	–	–	–	11 500 ICI/123	23 100 ICI/127	31 300 ICI/127	50 700 ICI/126	63 200 ICI/130	102 300 ICI/126	–	–	–	–	–	–			
	100	–	–	–	–	–	–	–	36 500 C2I/98.2	60 500 C2I/103	81 500 C2I/104	120 000 C2I/102	160 300 C2I/100	240 000 C2I/98.5	277 200 C2I/100	415 200 C2I/103	519 000 C2I/103	554 300 C2I/102			
	100	–	2 150 ICI/99.4	2 560 ICI/99.4	4 430 ICI/103	5 200 ICI/103	11 400 ICI/100	25 700 ICI/102	32 150 ICI/100	51 900 ICI/106	67 000 ICI/102	102 000 ICI/106	–	–	–	–	–	–			
	90	–	–	–	–	–	–	–	17.5 34 650 C2I/87.8	31 63 000 C2I/90.4	35.6 72 200 C2I/90	64.5 127 600 C2I/87.9	73.6 149 500 C2I/90.3	112 224 700 C2I/89	143 289 200 C2I/89.7	– 384 500 C2I/88.8	– 480 600 C2I/88.8	– 578 500 C2I/91.4	90	2800	**31.5**
	80	–	–	–	–	–	–	–	17.2 34 150 C2I/78.6	29 60 500 C2I/82.7	37.5 78 600 C2I/83.1	58.5 120 000 C2I/81.4	75.7 153 100 C2I/80.2	117 232 400 C2I/78.8	141 284 900 C2I/80.3	– 415 300 C2I/82.6	– 519 100 C2I/82.6	– 569 900 C2I/81.2	80	2500	
	80	0.71 1 350 ICI/75.2	1.12 2 250 ICI/79.5	1.38 2 770 ICI/79.5	2.3 4 790 ICI/82.7	2.68 5 590 ICI/82.7	5.61 10 850 ICI/76.7	11.3 22 150 ICI/78.1	12.6 24 900 ICI/78.1	22.2 43 750 ICI/78.1	24.7 50 100 ICI/80.5	45.7 90 000 ICI/78.1	–	–	–	–	–	–	80	2500	
	71	–	–	–	–	–	–	–	18 35 550 C2I/70.2	31.3 63 650 C2I/72.3	34.7 70 400 C2I/72	63.1 124 900 C2I/70.3	74.1 150 600 C2I/72.2	108 217 000 C2I/71.2	147 297 100 C2I/71.7	188 376 500 C2I/71.1	234 468 600 C2I/71.1	289 594 100 C2I/73.1	71	2240	
	63	–	–	–	–	–	–	–	18.4 35 900 C2I/62	29.4 60 500 C2I/65.2	39.5 81 500 C2I/65.5	59.3 120 000 C2I/64.2	86 171 200 C2I/63.2	123 240 700 C2I/62.1	156 312 000 C2I/63.3	202 415 100 C2I/65.1	253 518 900 C2I/65.1	315 634 900 C2I/64	63	2000	
	63	0.71 1 350 ICI/60.1	1.15 2 310 ICI/63.6	1.42 2 840 ICI/63.6	2.36 4 920 ICI/66.2	2.72 5 680 ICI/66.2	6.27 12 100 ICI/61.3	11.7 23 100 ICI/62.5	15.3 30 100 ICI/62.5	25.7 50 700 ICI/62.5	31.4 63 600 ICI/64.4	51.9 102 300 ICI/62.5	–	–	–	–	–	–	63	2000	
	56	–	–	–	–	–	–	–	18.8 36 500 C2I/55.4	33 65 800 C2I/57	36.3 72 150 C2I/56.8	65.7 127 500 C2I/55.5	87.2 173 900 C2I/56.9	125 246 100 C2I/56.1	172 340 300 C2I/56.6	200 391 600 C2I/56	249 489 500 C2I/56	302 609 800 C2I/57.6	56	1800	
	50	–	–	–	–	–	–	–	18.1 35 900 C2I/50.4	29.4 60 500 C2I/52.1	39.5 81 500 C2I/52.4	56.6 120 100 C2I/53.9	82 171 500 C2I/53.1	117 241 000 C2I/52.1	149 312 400 C2I/53.1	205 414 900 C2I/51.3	257 518 600 C2I/51.3	309 615 200 C2I/50.5	50	1600	
	50	0.76 1 460 ICI/49	1.3 2 600 ICI/50.9	1.52 3 050 ICI/50.9	2.65 5 540 ICI/53	2.97 6 210 ICI/53	5.82 11 450 ICI/49.9	12.7 25 100 ICI/50	15.9 30 900 ICI/49.3	25.9 53 550 ICI/52.5	36.8 73 550 ICI/50.8	51.5 106 400 ICI/52.5	–	–	–	–	–	–	50	1600	

For n_1 lower than 560 rpm see page 195.

9 - Bevel helical gear reducer selection tables

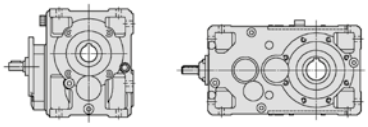

$n_{N2} \cdot L_h$ rpm · h	i_N	50	63	64	80	81	100	125	140	160	180	200	225	250	280	320	321	360	i_N	n_1 rpm	n_{N2}
		Nominal output power P_{N2} [hp] Nominal output torque T_{N2} [lb in] Train of gears / ratio ... / i																			
400 000	45	–	–	–	–	–	–	–	18.5 37 600 C2I/45.1	32.1 65 850 C2I/45.6	40.3 82 450 C2I/45.4	61 127 800 C2I/46.6	80.5 173 100 C2I/47.8	116 246 700 C2I/47.1	161 344 500 C2I/47.5	200 398 300 C2I/44.2	249 495 600 C2I/44.2	307 628 400 C2I/45.4	45	1400	31.5
	40	–	–	–	–	–	–	–	18.7 36 400 C2I/38.7	33.5 66 850 C2I/39.5	37.3 77 000 C2I/41	62.2 133 600 C2I/42.6	76.3 159 300 C2I/41.4	120 258 300 C2I/42.8	150 314 200 C2I/41.6	201 399 800 C2I/39.5	251 499 700 C2I/39.5	304 628 400 C2I/41	40	1250	
	40	0.82 1 600 ICI/38.6	1.38 2 790 ICI/40.1	1.69 3 430 ICI/40.1	2.81 5 930 ICI/41.8	3.25 6 860 ICI/41.8	7.1 14 100 ICI/39.4	12.8 25 550 ICI/39.4	14.2 28 750 ICI/40.2	29 60 500 ICI/41.4	34 71 350 ICI/41.6	54.5 113 600 ICI/41.4	–	–	–	–	–	–	40	1250	
	35.5	–	–	–	–	–	–	–	17.8 37 600 C2I/37.5	31 65 450 C2I/37.5	37.9 79 650 C2I/37.3	62.6 124 400 C2I/35.3	78.1 159 300 C2I/36.2	116 243 000 C2I/37.2	156 330 000 C2I/37.5	195 398 300 C2I/36.3	243 495 600 C2I/36.3	299 628 400 C2I/37.3	35.5	1120	
	31.5	–	–	–	–	–	–	–	18.1 36 450 C2I/32	29 60 500 C2I/33.1	38.9 81 550 C2I/33.2	55.8 120 200 C2I/34.2	80.9 171 600 C2I/33.7	116 241 200 C2I/33.1	147 312 600 C2I/33.7	208 410 800 C2I/31.3	260 513 500 C2I/31.3	307 628 400 C2I/32.5	31.5	1000	
	31.5	0.83 1 680 ICI/32.1	1.42 2 940 ICI/33	1.65 3 430 ICI/33	2.74 5 440 ICI/31.4	3.12 6 180 ICI/31.4	6.34 13 100 ICI/32.8	11.1 22 750 ICI/32.4	–	24.7 48 900 ICI/31.4	–	49.1 101 300 ICI/32.7	–	–	–	–	–	–	31.5	1000	
	31.5	–	1.04 2 060 CI/31.3	1.16 2 280 CI/31.3	2.04 4 170 CI/32.5	2.54 5 190 CI/32.5	4.95 9 400 CI/30.1	9.27 18 250 CI/31.3	–	18.1 35 150 CI/30.8	–	37 71 700 CI/30.8	–	74.2 148 400 CI/31.7	–	–	–	–	31.5	1000	
	28	–	–	–	–	–	–	–	18.7 37 500 C2I/28.6	32.5 65 800 C2I/28.9	43.9 88 550 C2I/28.8	61.8 127 800 C2I/29.5	78.2 166 000 C2I/30.3	118 246 600 C2I/29.9	167 352 300 C2I/30.1	203 398 300 C2I/28	253 495 600 C2I/28	312 628 400 C2I/28.8	28	900	
	25	–	–	–	–	–	–	–	18.8 36 350 C2I/24.5	34 67 200 C2I/25.1	39.2 80 250 C2I/26	62.8 133 600 C2I/27	77 159 300 C2I/26.3	121 258 300 C2I/27.2	157 325 700 C2I/26.4	202 398 300 C2I/25.1	251 495 600 C2I/25.1	307 628 400 C2I/26	25	800	
	25	0.71 1 350 CI/24.1	1.16 2 290 CI/25	1.47 2 890 CI/25	2.51 5 130 CI/26	2.89 5 920 CI/26	5.18 9 830 CI/24.1	11.3 22 150 CI/25	–	22.5 43 650 CI/24.6	–	45 87 250 CI/24.6	–	90 180 100 CI/25.4	–	–	–	–	25	800	
	22.4	–	–	–	–	–	–	–	17.7 37 500 C2I/23.8	31.2 65 900 C2I/23.8	41.5 87 100 C2I/23.7	64.2 127 600 C2I/22.4	78.1 159 300 C2I/23	118 246 600 C2I/23.6	161 339 900 C2I/23.8	195 398 300 C2I/23	243 495 600 C2I/23	299 628 400 C2I/23.7	22.4	710	
	20	–	–	–	–	–	–	–	16.5 33 800 C2I/20.4	32.7 67 250 C2I/20.6	38.1 81 500 C2I/21.4	64.5 132 000 C2I/20.5	72.9 145 200 C2I/19.9	120 257 000 C2I/21.5	148 308 300 C2I/20.8	193 398 300 C2I/20.6	241 495 600 C2I/20.6	287 613 900 C2I/21.4	20	630	
	20	0.7 1 350 CI/19.3	1.2 2 410 CI/20	1.48 2 960 CI/20	2.47 5 130 CI/20.8	2.85 5 930 CI/20.8	6.28 12 100 CI/19.3	11.5 23 100 CI/20	15.7 31 400 CI/20	25.7 50 700 CI/19.7	31.9 64 700 CI/20.3	51.5 101 500 CI/19.7	63.4 128 600 CI/20.3	99.2 201 500 CI/20.3	127 254 000 CI/20	160 315 800 CI/19.7	220 433 700 CI/19.7	250 507 700 CI/20.3	20	630	
	18	–	–	–	–	–	–	–	14.9 30 250 CI/18	25.3 51 250 CI/18	29.9 62 750 CI/18.7	50.5 102 400 CI/18	59.1 124 300 CI/18.7	101 203 700 CI/17.9	118 240 000 CI/18	154 312 400 CI/18	213 431 000 CI/18	235 486 800 CI/18.4	18	560	
355 000	200	–	–	–	–	–	8 750 ICI/192	20 550 ICI/199	–	39 500 ICI/196	–	80 650 ICI/196	–	–	–	–	–	–			
	160	–	–	–	–	–	–	–	32 450 C2I/151	50 850 C2I/154	71 000 C2I/158	102 500 C2I/151	140 000 C2I/156	206 000 C2I/156	283 700 C2I/154	355 000 C2I/156	425 000 C2I/156	560 000 C2I/161			
	160	–	–	–	–	–	10 900 ICI/154	22 250 ICI/159	24 900 ICI/159	42 800 ICI/157	49 400 ICI/162	86 300 ICI/157	–	–	–	–	–	–			
	125	–	–	–	–	–	–	–	34 500 C2I/123	60 700 C2I/129	77 500 C2I/130	120 400 C2I/127	150 800 C2I/125	233 300 C2I/123	264 200 C2I/125	410 000 C2I/129	512 600 C2I/129	504 200 C2I/127			

For n_1 lower than 560 rpm see page 195.

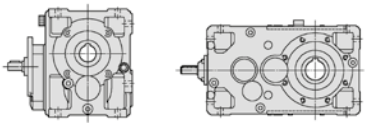

$n_{N2} \cdot L_h$ rpm · h	i_N	50	63	64	80	81	100	125	140	160	180	200	225	250	280	320	321	360	i_N	n_1 rpm	n_{N2}
		Nominal output power P_{N2} [hp] Nominal output torque T_{N2} [lb in] Train of gears / ratio … / i																			
355 000	125	–	–	–	–	–	11 800 ICI/123	23 200 ICI/127	32 000 ICI/127	50 900 ICI/126	63 450 ICI/130	102 700 ICI/126	–	–	–	–	–	–			
	100	–	–	–	–	–	–	–	16.8 37 150 C2I/98.2	26.1 60 700 C2I/103	35 81 800 C2I/104	52.6 120 400 C2I/102	72.5 163 500 C2I/100	109 241 600 C2I/98.5	125 281 600 C2I/100	– 416 700 C2I/103	– 520 900 C2I/103	– 562 200 C2I/102	100	2800	28
	100	–	0.96 2 160 ICI/99.4	1.15 2 570 ICI/99.4	1.91 4 440 ICI/103	2.24 5 220 ICI/103	5.08 11 450 ICI/100	11.3 25 800 ICI/102	14.4 32 500 ICI/100	21.9 52 100 ICI/106	30 69 000 ICI/102	43.1 102 400 ICI/106	–	–	–	–	–	–	100	2800	
	90	–	–	–	–	–	–	–	15.9 35 100 C2I/87.8	27.6 63 000 C2I/90.4	31.9 72 450 C2I/90	57.8 128 000 C2I/87.9	68 154 700 C2I/90.3	104 232 500 C2I/89	130 293 200 C2I/89.7	– 393 200 C2I/88.8	– 491 500 C2I/88.8	– 586 400 C2I/91.4	90	2500	
	80	–	–	–	–	–	–	–	16 35 300 C2I/78.6	26.1 60 700 C2I/82.7	34.7 81 250 C2I/83.1	52.6 120 400 C2I/81.4	70.1 158 200 C2I/80.2	108 240 100 C2I/78.8	128 288 700 C2I/80.3	179 416 700 C2I/82.6	224 520 900 C2I/82.6	253 577 400 C2I/81.2	80	2240	
	80	0.64 1 360 ICI/75.2	1.02 2 280 ICI/79.5	1.25 2 800 ICI/79.5	2.08 4 850 ICI/82.7	2.41 5 610 ICI/82.7	5.04 10 900 ICI/76.7	10.1 22 250 ICI/78.1	11.5 25 200 ICI/78.1	20.2 44 350 ICI/78.1	22.4 50 750 ICI/80.5	41.5 91 200 ICI/78.1	–	–	–	–	–	–	80	2240	
	71	–	–	–	–	–	–	–	16.3 36 050 C2I/70.2	28.9 65 850 C2I/72.3	31.9 72 450 C2I/72	57.8 128 000 C2I/70.3	67.1 152 700 C2I/72.2	100 224 600 C2I/71.2	133 301 100 C2I/71.7	171 383 000 C2I/71.1	214 478 700 C2I/71.1	261 602 200 C2I/73.1	71	2000	
	63	–	–	–	–	–	–	–	17.1 37 100 C2I/62	26.6 60 700 C2I/65.2	35.6 81 750 C2I/65.5	53.6 120 400 C2I/64.2	77.6 171 800 C2I/63.2	111 241 500 C2I/62.1	141 313 000 C2I/63.3	183 416 500 C2I/65.1	228 520 600 C2I/65.1	292 655 300 C2I/64	63	1800	
	63	0.64 1 360 ICI/60.1	1.05 2 340 ICI/63.6	1.29 2 880 ICI/63.6	2.15 4 980 ICI/66.2	2.48 5 750 ICI/66.2	5.66 12 150 ICI/61.3	10.6 23 150 ICI/62.5	13.9 30 500 ICI/62.5	23.2 50 850 ICI/62.5	28.6 64 400 ICI/64.4	46.9 102 600 ICI/62.5	–	–	–	–	–	–	63	1800	
	56	–	–	–	–	–	–	–	17 37 000 C2I/55.4	29.4 66 050 C2I/57	32.4 72 400 C2I/56.8	58.6 128 000 C2I/55.5	78.3 175 500 C2I/56.9	112 247 000 C2I/56.1	158 351 600 C2I/56.6	178 393 000 C2I/56	223 491 300 C2I/56	272 618 500 C2I/57.6	56	1600	
	50	–	–	–	–	–	–	–	16.1 36 450 C2I/50.4	25.9 60 750 C2I/52.1	34.7 81 850 C2I/52.4	49.7 120 700 C2I/53.9	72.1 172 200 C2I/53.1	103 242 100 C2I/52.1	131 313 700 C2I/53.1	180 416 700 C2I/51.3	225 520 800 C2I/51.3	282 640 400 C2I/50.5	50	1400	
	50	0.67 1 470 ICI/49	1.14 2 610 ICI/50.9	1.34 3 060 ICI/50.9	2.33 5 570 ICI/53	2.63 6 270 ICI/53	5.18 11 650 ICI/49.9	11.5 25 800 ICI/50	14.2 31 400 ICI/49.3	23 54 450 ICI/52.5	32.3 73 850 ICI/50.8	45.7 108 100 ICI/52.5	–	–	–	–	–	–	50	1400	
	45	–	–	–	–	–	–	–	16.6 37 600 C2I/45.1	28.7 66 100 C2I/45.6	37.3 85 300 C2I/45.4	54.6 128 300 C2I/46.6	74.3 179 100 C2I/47.8	104 247 600 C2I/47.1	148 353 700 C2I/47.5	179 398 300 C2I/44.2	223 495 600 C2I/44.2	274 628 400 C2I/45.4	45	1250	
	40	–	–	–	–	–	–	–	16.8 36 600 C2I/38.7	30.3 67 450 C2I/39.5	34.5 79 600 C2I/41	55.9 134 100 C2I/42.6	68.8 160 400 C2I/41.4	108 259 200 C2I/42.8	138 322 300 C2I/41.6	186 413 200 C2I/39.5	232 516 500 C2I/39.5	272 628 400 C2I/41	40	1120	
	40	0.74 1 600 ICI/38.6	1.23 2 790 ICI/40.1	1.52 3 430 ICI/40.1	2.52 5 930 ICI/41.8	2.92 6 860 ICI/41.8	6.38 14 150 ICI/39.4	11.9 26 400 ICI/39.4	12.7 28 750 ICI/40.2	26.1 60 700 ICI/41.4	30.6 71 600 ICI/41.6	49 114 000 ICI/41.4	–	–	–	–	–	–	40	1120	
	35.5	–	–	–	–	–	–	–	15.9 37 600 C2I/37.5	28 66 150 C2I/37.5	33.9 79 650 C2I/37.3	57.6 128 100 C2I/35.3	69.8 159 300 C2I/36.2	105 247 500 C2I/37.2	144 341 400 C2I/37.5	174 398 300 C2I/36.3	217 495 600 C2I/36.3	267 628 400 C2I/37.3	35.5	1000	
	31.5	–	–	–	–	–	–	–	16.3 36 450 C2I/32	26.2 60 700 C2I/33.1	35.2 81 800 C2I/33.2	50.4 120 600 C2I/34.2	73 172 200 C2I/33.7	104 242 000 C2I/33.1	133 313 600 C2I/33.7	193 424 000 C2I/31.3	242 530 000 C2I/31.3	276 628 400 C2I/32.5	31.5	900	
	31.5	0.75 1 680 ICI/32.1	1.28 2 950 ICI/33	1.48 3 430 ICI/33	2.47 5 440 ICI/31.4	2.9 6 380 ICI/31.4	5.73 13 150 ICI/32.8	10.2 23 150 ICI/32.4	–	22.3 48 900 ICI/31.4	–	44.4 101 600 ICI/32.7	–	–	–	–	–	–	31.5	900	

For n_1 lower than 560 rpm see page 195.

9 - Bevel helical gear reducer selection tables

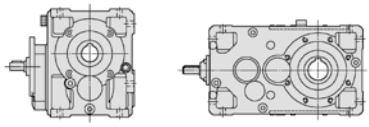

$n_{N2} \cdot L_h$ rpm · h	i_N	50	63	64	80	81	100	125	140	160	180	200	225	250	280	320	321	360	i_N	n_1 rpm	n_{N2}
		Nominal output power P_{N2} [hp] Nominal output torque T_{N2} [lb in] Train of gears / ratio … / i																			
355 000	31.5	–	0.94 2 060 CI/31.3	1.05 2 290 CI/31.3	1.84 4 190 CI/32.5	2.29 5 210 CI/32.5	4.47 9 430 CI/30.1	8.37 18 350 CI/31.3	–	16.4 35 250 CI/30.8	–	33.4 71 950 CI/30.8	–	67 148 900 CI/31.7	–	–	–	–	31.5	900	28
	28	–	–	–	–	–	–	–	16.7 37 500 C2I/28.6	29 66 050 C2I/28.9	39.2 88 850 C2I/28.8	55.1 128 200 C2I/29.5	72 172 000 C2I/30.3	105 247 500 C2I/29.9	149 353 600 C2I/30.1	181 398 300 C2I/28	225 495 600 C2I/28	277 628 400 C2I/28.8	28	800	
	25	–	–	–	–	–	–	–	16.8 36 600 C2I/24.5	30.3 67 450 C2I/25.1	34.9 80 550 C2I/26	55.9 134 100 C2I/27	68.3 159 300 C2I/26.3	108 259 200 C2I/27.2	144 337 600 C2I/26.4	185 410 800 C2I/25.1	231 513 500 C2I/25.1	272 628 400 C2I/26	25	710	
	25	–	0.63 1 360 CI/24.1	1.04 2 300 CI/25	1.31 2 900 CI/25	2.22 5 130 CI/26	2.57 5 930 CI/26	4.62 9 880 CI/24.1	10 22 250 CI/25	–	20.2 44 050 CI/24.6	–	40.3 88 150 CI/24.6	–	80.5 181 300 CI/25.4	–	–	–	–	25	710	
	22.4	–	–	–	–	–	–	–	15.7 37 500 C2I/23.8	27.8 66 150 C2I/23.8	38 90 000 C2I/23.7	57.2 128 000 C2I/22.4	71.1 163 500 C2I/23	105 247 500 C2I/23.6	148 352 400 C2I/23.8	173 398 300 C2I/23	215 495 600 C2I/23	266 628 400 C2I/23.7	22.4	630	
	20	–	–	–	–	–	–	–	14.8 33 950 C2I/20.4	29.1 67 500 C2I/20.6	35.1 84 400 C2I/21.4	57.3 132 000 C2I/20.5	65.5 146 700 C2I/19.9	106 257 000 C2I/21.5	136 319 400 C2I/20.8	172 398 300 C2I/20.6	215 497 200 C2I/20.6	258 620 100 C2I/21.4	20	560	
	20	–	0.63 1 360 CI/19.3	1.07 2 410 CI/20	1.32 2 960 CI/20	2.19 5 130 CI/20.8	2.53 5 930 CI/20.8	5.61 12 150 CI/19.3	10.3 23 150 CI/20	14 31 400 CI/20	23 50 850 CI/19.7	28.6 65 400 CI/20.3	46.3 102 700 CI/19.7	56.9 129 900 CI/20.3	91.3 208 700 CI/20.3	114 256 600 CI/20	145 322 300 CI/19.7	196 435 300 CI/19.7	223 509 600 CI/20.3	20	560	
315 000	200	–	–	–	–	–	8 750 ICI/192	20 600 ICI/199	–	39 650 ICI/196	–	80 950 ICI/196	–	–	–	–	–	–			
	160	–	–	–	–	–	–	–	32 550 C2I/151	51 000 C2I/154	71 000 C2I/158	102 900 C2I/151	145 000 C2I/156	211 900 C2I/156	284 700 C2I/154	355 000 C2I/156	436 800 C2I/156	580 000 C2I/161			
	160	–	–	–	–	–	10 900 ICI/154	22 350 ICI/159	25 000 ICI/159	42 950 ICI/157	49 550 ICI/162	89 450 ICI/157	–	–	–	–	–	–			
	125	–	–	–	–	–	–	–	35 500 C2I/123	60 900 C2I/129	77 500 C2I/130	120 800 C2I/127	151 400 C2I/125	241 800 C2I/123	273 900 C2I/125	418 100 C2I/129	522 600 C2I/129	522 600 C2I/127			
	125	–	–	–	–	–	12 200 ICI/123	23 250 ICI/127	32 150 ICI/127	51 050 ICI/126	63 650 ICI/130	103 100 ICI/126	–	–	–	–	–	–			
	100	–	–	–	–	–	–	–	15.1 37 300 C2I/98.2	23.4 60 950 C2I/103	31.4 82 100 C2I/104	47.1 120 900 C2I/102	64.9 164 100 C2I/100	97.7 242 500 C2I/98.5	115 291 300 C2I/100	– 418 200 C2I/103	– 522 800 C2I/103	– 569 900 C2I/102	100	2500	25
	100	–	0.86 2 160 ICI/99.4	1.03 2 580 ICI/99.4	1.71 4 460 ICI/103	2.01 5 230 ICI/103	4.56 11 500 ICI/100	10.1 25 900 ICI/102	12.9 32 600 ICI/100	19.6 52 250 ICI/106	26.8 69 000 ICI/102	38.6 102 800 ICI/106	–	–	–	–	–	–	100	2500	
	90	–	–	–	–	–	–	–	14.6 36 100 C2I/87.8	25.6 65 000 C2I/90.4	28.7 72 700 C2I/90	51.9 128 500 C2I/87.9	63 159 900 C2I/90.3	96 240 300 C2I/89	118 297 100 C2I/89.7	158 394 600 C2I/88.8	197 493 200 C2I/88.8	231 594 100 C2I/91.4	90	2240	
	80	–	–	–	–	–	–	–	14.7 36 500 C2I/78.6	23.4 60 950 C2I/82.7	31.4 82 100 C2I/83.1	47.1 120 900 C2I/81.4	64.8 163 700 C2I/80.2	97.7 242 500 C2I/78.8	116 292 600 C2I/80.3	161 418 200 C2I/82.6	201 522 800 C2I/82.6	229 585 200 C2I/81.2	80	2000	
	80	–	0.57 1 360 ICI/75.2	0.92 2 310 ICI/79.5	1.13 2 840 ICI/79.5	1.89 4 920 ICI/82.7	2.18 5 680 ICI/82.7	4.52 10 900 ICI/76.7	9.07 22 300 ICI/78.1	10.4 25 550 ICI/78.1	18.3 44 950 ICI/78.1	20.3 51 450 ICI/80.5	37.5 92 450 ICI/78.1	–	–	–	–	–	80	2000	
	71	–	–	–	–	–	–	–	14.8 36 500 C2I/70.2	26.2 66 300 C2I/72.3	28.8 72 700 C2I/72	52.2 128 500 C2I/70.3	61.1 154 600 C2I/72.2	93 231 800 C2I/71.2	121 304 900 C2I/71.7	159 394 500 C2I/71.1	198 493 100 C2I/71.1	238 609 800 C2I/73.1	71	1800	

For n_1 lower than 560 rpm see page 195.

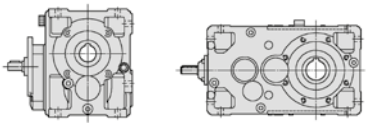

$n_{N2} \cdot L_h$ rpm · h	i_N	50	63	64	80	81	100	125	140	160	180	200	225	250	280	320	321	360	i_N	n_1 rpm	n_{N2}
		Nominal output power P_{N2} [hp] Nominal output torque T_{N2} [lb in] Train of gears / ratio … / i																			
315 000	63	–	–	–	–	–	–	–	15.7 38 400 C2I/62	23.7 60 900 C2I/65.2	31.8 82 050 C2I/65.5	47.8 120 800 C2I/64.2	69.3 172 500 C2I/63.2	99.1 242 400 C2I/62.1	126 314 200 C2I/63.3	163 418 000 C2I/65.1	204 522 500 C2I/65.1	269 678 800 C2I/64	63	1600	25
	63	0.57 1 360 ICI/60.1	0.95 2 370 ICI/63.6	1.16 2 920 ICI/63.6	1.94 5 050 ICI/66.2	2.24 5 840 ICI/66.2	5.05 12 200 ICI/61.3	9.44 23 250 ICI/62.5	12.7 31 400 ICI/62.5	20.7 51 050 ICI/62.5	25.8 65 350 ICI/64.4	41.8 103 000 ICI/62.5	–	–	–	–	–	–	63	1600	
	56	–	–	–	–	–	–	–	15.1 37 600 C2I/55.4	25.8 66 300 C2I/57	28.5 72 700 C2I/56.8	51.5 128 500 C2I/55.5	68.8 176 300 C2I/56.9	98.2 248 100 C2I/56.1	139 353 100 C2I/56.6	158 398 300 C2I/56	196 495 600 C2I/56	245 635 900 C2I/57.6	56	1400	
	50	–	–	–	–	–	–	–	14.8 37 700 C2I/50.4	23.2 60 950 C2I/52.1	31.1 82 150 C2I/52.4	44.6 121 100 C2I/53.9	64.6 172 800 C2I/53.1	92.4 242 900 C2I/52.1	117 314 900 C2I/53.1	162 418 100 C2I/51.3	202 522 700 C2I/51.3	260 662 500 C2I/50.5	50	1250	
	50	0.6 1 470 ICI/49	1.02 2 620 ICI/50.9	1.2 3 080 ICI/50.9	2.09 5 590 ICI/53	2.36 6 300 ICI/53	4.64 11 700 ICI/49.9	10.3 25 900 ICI/50	12.8 31 900 ICI/49.3	20.6 54 450 ICI/52.5	29 74 150 ICI/50.8	41.2 109 100 ICI/52.5	–	–	–	–	–	–	50	1250	
	45	–	–	–	–	–	–	–	14.8 37 600 C2I/45.1	25.8 66 300 C2I/45.6	34.5 88 150 C2I/45.4	49.1 128 700 C2I/46.6	67.8 182 400 C2I/47.8	93.7 248 500 C2I/47.1	133 355 000 C2I/47.5	160 398 300 C2I/44.2	199 495 600 C2I/44.2	246 628 400 C2I/45.4	45	1120	
	40	–	–	–	–	–	–	–	15.1 36 850 C2I/38.7	27.2 67 650 C2I/39.5	31.3 80 800 C2I/41	50.1 134 500 C2I/42.6	63.6 165 900 C2I/41.4	96.4 260 200 C2I/42.8	127 333 400 C2I/41.6	172 427 500 C2I/39.5	214 534 300 C2I/39.5	243 628 400 C2I/41	40	1000	
	40	0.66 1 610 ICI/38.6	1.1 2 790 ICI/40.1	1.35 3 430 ICI/40.1	2.25 5 930 ICI/41.8	2.6 6 860 ICI/41.8	5.72 14 200 ICI/39.4	11 27 300 ICI/39.4	11.4 28 750 ICI/40.2	23.4 60 950 ICI/41.4	27.4 71 850 ICI/41.6	43.9 114 400 ICI/41.4	–	–	–	–	–	–	40	1000	
	35.5	–	–	–	–	–	–	–	14.3 37 600 C2I/37.5	25.3 66 350 C2I/37.5	30.5 79 650 C2I/37.3	52 128 500 C2I/35.3	62.8 159 300 C2I/36.2	95.2 248 300 C2I/37.2	133 349 900 C2I/37.5	157 398 300 C2I/36.3	195 495 600 C2I/36.3	241 628 400 C2I/37.3	35.5	900	
	31.5	–	–	–	–	–	–	–	14.5 36 450 C2I/32	23.4 60 950 C2I/33.1	31.4 82 100 C2I/33.2	45 121 100 C2I/34.2	65.2 172 800 C2I/33.7	93.2 242 900 C2I/33.1	119 314 800 C2I/33.7	178 439 200 C2I/31.3	222 549 000 C2I/31.3	245 628 400 C2I/32.5	31.5	800	
	31.5	0.67 1 690 ICI/32.1	1.14 2 960 ICI/33	1.32 3 430 ICI/33	2.23 5 520 ICI/31.4	2.62 6 480 ICI/31.4	5.11 13 200 ICI/32.8	9.4 23 950 ICI/32.4	–	19.8 48 900 ICI/31.4	–	39.6 102 000 ICI/32.7	–	–	–	–	–	–	31.5	800	
	31.5	–	0.84 2 060 CI/31.3	0.93 2 300 CI/31.3	1.64 4 200 CI/32.5	2.04 5 230 CI/32.5	3.99 9 470 CI/30.1	7.47 18 400 CI/31.3	–	14.6 35 400 CI/30.8	–	29.8 72 250 CI/30.8	–	59.8 149 400 CI/31.7	–	–	–	–	31.5	800	
	28	–	–	–	–	–	–	–	14.8 37 500 C2I/28.6	25.8 66 300 C2I/28.9	34.9 89 200 C2I/28.8	49.1 128 700 C2I/29.5	66.2 178 300 C2I/30.3	93.6 248 500 C2I/29.9	133 355 000 C2I/30.1	160 398 300 C2I/28	199 495 600 C2I/28	246 628 400 C2I/28.8	28	710	
	25	–	–	–	–	–	–	–	15 36 850 C2I/24.5	27 67 700 C2I/25.1	31.1 80 850 C2I/26	49.8 134 600 C2I/27	60.9 160 100 C2I/26.3	95.8 260 200 C2I/27.2	133 349 900 C2I/26.4	170 425 800 C2I/25.1	212 532 200 C2I/25.1	242 628 400 C2I/26	25	630	
	25	0.56 1 360 CI/24.1	0.92 2 310 CI/25	1.17 2 920 CI/25	1.97 5 130 CI/26	2.28 5 930 CI/26	4.12 9 930 CI/24.1	8.93 22 350 CI/25	–	18.1 44 500 CI/24.6	–	36.1 89 000 CI/24.6	–	72.1 183 200 CI/25.4	–	–	–	–	25	630	
	22.4	–	–	–	–	–	–	–	14 37 500 C2I/23.8	24.8 66 400 C2I/23.8	33.8 90 000 C2I/23.7	50.8 128 000 C2I/22.4	65.5 169 400 C2I/23	93.5 248 500 C2I/23.6	133 355 000 C2I/23.8	154 398 300 C2I/23	191 495 600 C2I/23	236 628 400 C2I/23.7	22.4	560	
280 000	200	–	–	–	–	–	8 750 ICI/192	20 700 ICI/199	–	39 800 ICI/196	–	81 200 ICI/196	–	–	–	–	–	–			
	160	–	–	–	–	–	–	–	32 650 C2I/151	51 200 C2I/154	73 000 C2I/158	103 300 C2I/151	145 000 C2I/156	212 700 C2I/156	285 800 C2I/154	365 000 C2I/156	438 400 C2I/156	580 000 C2I/161			

For n_1 lower than 560 rpm see page 195.

9 - Bevel helical gear reducer selection tables

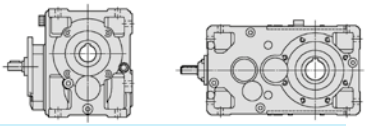

$n_{N2} \cdot L_h$ rpm · h	i_N	50	63	64	80	81	100	125	140	160	180	200	225	250	280	320	321	360	i_N	n_1 rpm	n_{N2}
		Nominal output power P_{N2} [hp] Nominal output torque T_{N2} [lb in] Train of gears / ratio … / i																			
280 000	160	–	–	–	–	–	10 950 ICI/154	22 400 ICI/159	25 100 ICI/159	43 100 ICI/157	49 750 ICI/162	92 700 ICI/157	–	–	–	–	–	–			
	125	–	–	–	–	–	–	–	13.2 36 350 C2I/123	21 61 150 C2I/129	27.6 80 650 C2I/130	42.4 121 300 C2I/127	53.9 152 000 C2I/125	87.8 243 300 C2I/123	100 283 700 C2I/125	– 419 700 C2I/129	– 524 600 C2I/129	– 541 400 C2I/127	125	2800	22.4
	125	–	–	–	–	–	4.42 12 250 ICI/123	8.16 23 350 ICI/127	11.3 32 250 ICI/127	18.1 51 250 ICI/126	21.9 63 900 ICI/130	36.6 103 500 ICI/126	–	–	–	–	–	–	125	2800	
	100	–	–	–	–	–	–	–	13.5 37 450 C2I/98.2	21 61 150 C2I/103	28.2 82 400 C2I/104	42.4 121 300 C2I/102	58.4 164 700 C2I/100	87.8 243 300 C2I/98.5	107 301 100 C2I/100	144 419 700 C2I/103	181 524 600 C2I/103	206 587 300 C2I/102	100	2240	
	100	–	0.78 2 170 ICI/99.4	0.92 2 590 ICI/99.4	1.54 4 470 ICI/103	1.81 5 250 ICI/103	4.1 11 550 ICI/100	9.08 26 000 ICI/102	11.6 32 750 ICI/100	17.7 52 450 ICI/106	24.7 71 000 ICI/102	35 104 100 ICI/106	–	–	–	–	–	–	100	2240	
	90	–	–	–	–	–	–	–	13.5 37 350 C2I/87.8	23.4 66 550 C2I/90.4	25.7 72 950 C2I/90	46.5 129 000 C2I/87.9	58.2 165 400 C2I/90.3	88.6 248 600 C2I/89	107 301 100 C2I/89.7	141 396 000 C2I/88.8	177 495 000 C2I/88.8	209 602 200 C2I/91.4	90	2000	
	80	–	–	–	–	–	–	–	13.7 37 700 C2I/78.6	21.1 61 150 C2I/82.7	28.3 82 400 C2I/83.1	42.5 121 300 C2I/81.4	60.2 168 900 C2I/80.2	88.2 243 300 C2I/78.8	105 296 300 C2I/80.3	145 419 600 C2I/82.6	181 524 500 C2I/82.6	208 592 600 C2I/81.2	80	1800	
	80	0.52 1 370 ICI/75.2	0.84 2 340 ICI/79.5	1.03 2 880 ICI/79.5	1.72 4 980 ICI/82.7	1.99 5 750 ICI/82.7	4.08 10 950 ICI/76.7	8.19 22 400 ICI/78.1	9.46 25 900 ICI/78.1	16.6 45 500 ICI/78.1	18.5 52 100 ICI/80.5	34.2 93 600 ICI/78.1	–	–	–	–	–	–	80	1800	
	71	–	–	–	–	–	–	–	13.4 37 000 C2I/70.2	23.4 66 550 C2I/72.3	25.7 72 950 C2I/72	46.5 129 000 C2I/70.3	55.4 157 600 C2I/72.2	85.6 240 100 C2I/71.2	109 309 200 C2I/71.7	141 396 000 C2I/71.1	177 495 000 C2I/71.1	215 618 500 C2I/73.1	71	1600	
	63	–	–	–	–	–	–	–	14.3 40 000 C2I/62	20.8 61 150 C2I/65.2	27.9 82 400 C2I/65.5	42 121 300 C2I/64.2	60.9 173 200 C2I/63.2	87 243 400 C2I/62.1	111 315 500 C2I/63.3	143 419 800 C2I/65.1	179 524 700 C2I/65.1	238 685 600 C2I/64	63	1400	
	63	0.5 1 370 ICI/60.1	0.84 2 410 ICI/63.6	1.03 2 960 ICI/63.6	1.72 5 130 ICI/66.2	1.99 5 930 ICI/66.2	4.44 12 250 ICI/61.3	8.29 23 350 ICI/62.5	11.5 32 250 ICI/62.5	18.2 51 250 ICI/62.5	22.9 66 400 ICI/64.4	36.8 103 400 ICI/62.5	–	–	–	–	–	–	63	1400	
	56	–	–	–	–	–	–	–	13.5 37 600 C2I/55.4	23.1 66 550 C2I/57	25.5 72 950 C2I/56.8	46.1 129 000 C2I/55.5	61.6 176 900 C2I/56.9	88 249 000 C2I/56.1	124 354 400 C2I/56.6	141 398 300 C2I/56	175 495 600 C2I/56	226 657 900 C2I/57.6	56	1250	
	50	–	–	–	–	–	–	–	13.7 38 950 C2I/50.4	20.8 61 150 C2I/52.1	27.9 82 400 C2I/52.4	40.1 121 500 C2I/53.9	58.1 173 400 C2I/53.1	83.1 243 800 C2I/52.1	106 316 000 C2I/53.1	145 419 600 C2I/51.3	182 524 500 C2I/51.3	241 684 700 C2I/50.5	50	1120	
	50	0.54 1 480 ICI/49	0.92 2 630 ICI/50.9	1.08 3 090 ICI/50.9	1.88 5 610 ICI/53	2.12 6 320 ICI/53	4.18 11 750 ICI/49.9	9.23 25 950 ICI/50	11.8 32 700 ICI/49.3	18.4 54 450 ICI/52.5	26 74 400 ICI/50.8	37.3 110 100 ICI/52.5	–	–	–	–	–	–	50	1120	
	45	–	–	–	–	–	–	–	13.2 37 600 C2I/45.1	23.1 66 550 C2I/45.6	31.3 89 500 C2I/45.4	44 129 200 C2I/46.6	60.7 183 000 C2I/47.8	83.9 249 300 C2I/47.1	119 356 200 C2I/47.5	143 398 300 C2I/44.2	178 495 600 C2I/44.2	223 637 500 C2I/45.4	45	1000	
	40	–	–	–	–	–	–	–	13.7 37 050 C2I/38.7	24.5 67 900 C2I/39.5	28.2 81 100 C2I/41	45.3 135 000 C2I/42.6	59 171 200 C2I/41.4	87 261 000 C2I/42.8	118 344 100 C2I/41.6	159 441 200 C2I/39.5	199 551 500 C2I/39.5	219 628 400 C2I/41	40	900	
	40	0.6 1 610 ICI/38.6	0.99 2 790 ICI/40.1	1.22 3 430 ICI/40.1	2.03 5 930 ICI/41.8	2.34 6 860 ICI/41.8	5.16 14 250 ICI/39.4	10.1 27 950 ICI/39.4	10.2 28 750 ICI/40.2	21.1 61 150 ICI/41.4	24.8 72 100 ICI/41.6	39.6 114 800 ICI/41.4	–	–	–	–	–	–	40	900	
	35.5	–	–	–	–	–	–	–	12.7 37 600 C2I/37.5	22.6 66 600 C2I/37.5	27.3 80 100 C2I/37.3	46.4 129 000 C2I/35.3	55.8 159 300 C2I/36.2	84.9 249 200 C2I/37.2	119 351 200 C2I/37.5	139 398 300 C2I/36.3	173 495 600 C2I/36.3	214 628 400 C2I/37.3	35.5	800	

For n_1 lower than 560 rpm see page 195.

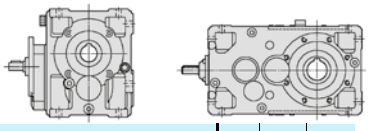

$n_{N2} \cdot L_h$ rpm · h	i_N	50	63	64	80	81	100	125	140	160	180	200	225	250	280	320	321	360	i_N	n_1 rpm	n_{N2}
		Nominal output power P_{N2} [hp] Nominal output torque T_{N2} [lb in] Train of gears / ratio … / i																			
280 000	31.5	–	–	–	–	–	–	–	13.2 37 600 C2I/32	20.8 61 150 C2I/33.1	27.9 82 400 C2I/33.2	40.1 121 500 C2I/34.2	58.1 173 400 C2I/33.7	83 243 800 C2I/33.1	106 316 000 C2I/33.7	161 448 200 C2I/31.3	201 560 300 C2I/31.3	218 628 400 C2I/32.5	31.5	710	**22.4**
	31.5	0.59 1 690 ICI/32.1	1.01 2 960 ICI/33	1.17 3 430 ICI/33	1.99 5 540 ICI/31.4	2.33 6 510 ICI/31.4	4.54 13 200 ICI/32.8	8.64 24 850 ICI/32.4	–	17.6 48 900 ICI/31.4	–	35.3 102 400 ICI/32.7	–	–	–	–	–	–	31.5	710	
	31.5	–	0.74 2 060 CI/31.3	0.83 2 310 CI/31.3	1.46 4 220 CI/32.5	1.82 5 250 CI/32.5	3.55 9 500 CI/30.1	6.66 18 450 CI/31.3	–	13 35 500 CI/30.8	–	26.5 72 500 CI/30.8	–	53.2 150 000 CI/31.7	–	–	–	–	31.5	710	
	28	–	–	–	–	–	–	–	13.1 37 500 C2I/28.6	23 66 550 C2I/28.9	31.1 89 550 C2I/28.8	43.7 129 200 C2I/29.5	60.4 183 000 C2I/30.3	83.4 249 400 C2I/29.9	118 356 300 C2I/30.1	142 398 300 C2I/28	177 495 600 C2I/28	218 628 400 C2I/28.8	28	630	
	25	–	–	–	–	–	–	–	13.4 37 050 C2I/24.5	24.1 67 950 C2I/25.1	27.7 81 150 C2I/26	44.4 135 100 C2I/27	56.1 165 800 C2I/26.3	85.4 261 200 C2I/27.2	120 355 000 C2I/26.4	156 441 100 C2I/25.1	195 551 400 C2I/25.1	215 628 400 C2I/26	25	560	
	25	0.5 1 360 CI/24.1	0.82 2 320 CI/25	1.04 2 930 CI/25	1.75 5 130 CI/26	2.03 5 930 CI/26	3.68 9 970 CI/24.1	7.97 22 400 CI/25	–	16.2 44 900 CI/24.6	–	32.4 89 850 CI/24.6	–	64.8 185 100 CI/25.4	–	–	–	–	25	560	
250 000	200	–	–	–	–	–	9 000 ICI/192	20 750 ICI/199	–	39 950 ICI/196	–	81 500 ICI/196	–	–	–	–	–	–			
	160	–	–	–	–	–	–	–	32 800 C2I/151	51 400 C2I/154	74 650 C2I/158	103 700 C2I/151	149 500 C2I/156	213 500 C2I/156	286 900 C2I/154	374 000 C2I/156	440 000 C2I/156	580 000 C2I/161			
	160	–	–	–	–	–	11 000 ICI/154	22 500 ICI/159	25 200 ICI/159	43 300 ICI/157	49 950 ICI/162	96 050 ICI/157	–	–	–	–	–	–			
	125	–	–	–	–	–	–	–	11.8 36 500 C2I/123	18.8 61 350 C2I/129	24.7 80 900 C2I/130	38 121 700 C2I/127	48.3 152 500 C2I/125	78.7 244 200 C2I/123	92.8 293 600 C2I/125	– 421 200 C2I/129	– 526 500 C2I/129	– 560 100 C2I/127	125	2500	**20**
	125	–	–	–	–	–	3.96 12 300 ICI/123	7.31 23 450 ICI/127	10.1 32 350 ICI/127	16.2 51 450 ICI/126	19.6 64 150 ICI/130	32.8 103 800 ICI/126	–	–	–	–	–	–	125	2500	
	100	–	–	–	–	–	–	–	12.1 37 550 C2I/98.2	18.8 61 350 C2I/103	25.3 82 700 C2I/104	38 121 700 C2I/102	52.3 165 300 C2I/100	78.7 244 200 C2I/98.5	98.5 311 500 C2I/100	129 421 200 C2I/103	162 526 500 C2I/103	190 607 600 C2I/102	100	2000	
	100	–	0.7 2 180 ICI/99.4	0.83 2 600 ICI/99.4	1.38 4 490 ICI/103	1.62 5 270 ICI/103	3.67 11 600 ICI/100	8.14 26 100 ICI/102	10.4 32 850 ICI/100	15.8 52 650 ICI/106	22.1 71 000 ICI/102	31.7 105 500 ICI/106	–	–	–	–	–	–	100	2000	
	90	–	–	–	–	–	–	–	12.3 37 700 C2I/87.8	21.1 66 750 C2I/90.4	23.2 73 200 C2I/90	42 129 400 C2I/87.9	52.9 167 200 C2I/90.3	80.1 249 700 C2I/89	97.1 304 900 C2I/89.7	128 397 300 C2I/88.8	160 496 600 C2I/88.8	191 609 800 C2I/91.4	90	1800	
	80	–	–	–	–	–	–	–	12.6 39 050 C2I/78.6	18.8 61 350 C2I/82.7	25.3 82 700 C2I/83.1	38 121 700 C2I/81.4	55 173 800 C2I/80.2	78.7 244 200 C2I/78.8	95.1 300 800 C2I/80.3	129 421 200 C2I/82.6	162 526 500 C2I/82.6	188 601 000 C2I/81.2	80	1600	
	80	0.46 1 370 ICI/75.2	0.76 2 370 ICI/79.5	0.93 2 920 ICI/79.5	1.55 5 050 ICI/82.7	1.79 5 840 ICI/82.7	3.64 11 000 ICI/76.7	7.3 22 500 ICI/78.1	8.53 26 250 ICI/78.1	15 46 150 ICI/78.1	16.7 52 800 ICI/80.5	30.8 94 950 ICI/78.1	–	–	–	–	–	–	80	1600	
	71	–	–	–	–	–	–	–	11.9 37 600 C2I/70.2	20.5 66 800 C2I/72.3	22.6 73 350 C2I/72	40.9 129 500 C2I/70.3	50.5 164 000 C2I/72.2	78 249 900 C2I/71.2	97.3 314 200 C2I/71.7	124 398 300 C2I/71.1	155 497 100 C2I/71.1	191 628 400 C2I/73.1	71	1400	
	63	–	–	–	–	–	–	–	13.1 40 850 C2I/62	18.7 61 400 C2I/65.2	25 82 700 C2I/65.5	37.6 121 800 C2I/64.2	54.5 173 800 C2I/63.2	78 244 300 C2I/62.1	99.2 316 600 C2I/63.3	128 421 300 C2I/65.1	160 526 600 C2I/65.1	213 688 100 C2I/64	63	1250	

For n_1 lower than 560 rpm see page 195.

9 - Bevel helical gear reducer selection tables

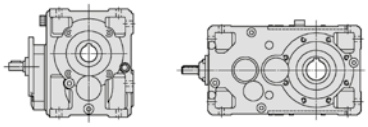

$n_{N2} \cdot L_h$ rpm · h	i_N	50	63	64	80	81	100	125	140	160	180	200	225	250	280	320	321	360	i_N	n_1 rpm	n_{N2}
		Nominal output power P_{N2} [hp] Nominal output torque T_{N2} [lb in] Train of gears / ratio … / i																			
250 000	63	0.45 1 370 ICI/60.1	0.75 2 410 ICI/63.6	0.92 2 960 ICI/63.6	1.54 5 130 ICI/66.2	1.78 5 930 ICI/66.2	3.98 12 300 ICI/61.3	7.43 23 400 ICI/62.5	10.3 32 350 ICI/62.5	16.3 51 450 ICI/62.5	20.4 66 400 ICI/64.4	32.9 103 800 ICI/62.5	–	–	–	–	–	–	63	1250	20
	56	–	–	–	–	–	–	–	12.3 38 200 C2I/55.4	20.8 66 800 C2I/57	22.9 73 300 C2I/56.8	41.5 129 400 C2I/55.5	55.4 177 500 C2I/56.9	79.1 249 800 C2I/56.1	112 355 600 C2I/56.6	126 398 300 C2I/56	158 496 800 C2I/56	210 680 000 C2I/57.6	56	1120	
	50	–	–	–	–	–	–	–	12.7 40 300 C2I/50.4	18.7 61 400 C2I/52.1	25 82 700 C2I/52.4	35.9 121 900 C2I/53.9	52 174 100 C2I/53.1	74.4 244 600 C2I/52.1	94.7 317 100 C2I/53.1	130 421 100 C2I/51.3	163 526 400 C2I/51.3	216 687 700 C2I/50.5	50	1000	
	50	0.48 1 480 ICI/49	0.82 2 640 ICI/50.9	0.97 3 100 ICI/50.9	1.68 5 630 ICI/53	1.89 6 320 ICI/53	3.73 11 750 ICI/49.9	8.27 26 050 ICI/50	10.6 32 850 ICI/49.3	16.5 54 450 ICI/52.5	23.3 74 650 ICI/50.8	33.3 110 100 ICI/52.5	–	–	–	–	–	–	50	1000	
	45	–	–	–	–	–	–	–	11.9 37 600 C2I/45.1	20.9 66 750 C2I/45.6	28.2 89 800 C2I/45.4	39.8 129 600 C2I/46.6	54.9 183 600 C2I/47.8	75.8 250 200 C2I/47.1	107 357 400 C2I/47.5	129 398 300 C2I/44.2	161 496 500 C2I/44.2	207 658 000 C2I/45.4	45	900	
	40	–	–	–	–	–	–	–	12.2 37 250 C2I/38.7	22 68 550 C2I/39.5	25.2 81 400 C2I/41	40.5 136 000 C2I/42.6	53.6 175 000 C2I/41.4	78.4 264 600 C2I/42.8	109 356 500 C2I/41.6	145 452 500 C2I/39.5	182 565 600 C2I/39.5	195 628 400 C2I/41	40	800	
	40	0.53 1 620 ICI/38.6	0.88 2 790 ICI/40.1	1.08 3 430 ICI/40.1	1.8 5 930 ICI/41.8	2.08 6 860 ICI/41.8	4.61 14 300 ICI/39.4	9.03 28 050 ICI/39.4	9.4 29 750 ICI/40.2	18.8 61 350 ICI/41.4	22.1 72 350 ICI/41.6	35.4 115 200 ICI/41.4	–	–	–	–	–	–	40	800	
	35.5	–	–	–	–	–	–	–	11.3 37 600 C2I/37.5	20.1 66 850 C2I/37.5	25.1 83 050 C2I/37.3	41.3 129 500 C2I/35.3	50.6 162 700 C2I/36.2	75.7 250 200 C2I/37.2	106 352 500 C2I/37.5	124 398 300 C2I/36.3	154 497 100 C2I/36.3	193 639 900 C2I/37.3	35.5	710	
	31.5	–	–	–	–	–	–	–	12.2 38 950 C2I/32	18.6 61 400 C2I/33.1	24.9 82 750 C2I/33.2	35.7 122 000 C2I/34.2	51.7 174 100 C2I/33.7	74 244 700 C2I/33.1	94.1 317 100 C2I/33.7	144 453 000 C2I/31.3	181 566 200 C2I/31.3	193 628 400 C2I/32.5	31.5	630	
	31.5	0.53 1 700 ICI/32.1	0.9 2 960 ICI/33	1.04 3 430 ICI/33	1.77 5 560 ICI/31.4	2.08 6 530 ICI/31.4	4.02 13 200 ICI/32.8	7.95 25 750 ICI/32.4	–	15.6 48 900 ICI/31.4	–	31.4 102 800 ICI/32.7	–	–	–	–	–	–	31.5	630	
	31.5	–	0.66 2 060 CI/31.3	0.74 2 320 CI/31.3	1.3 4 240 CI/32.5	1.62 5 270 CI/32.5	3.17 9 540 CI/30.1	5.93 18 550 CI/31.3	–	11.5 35 500 CI/30.8	–	23.6 72 750 CI/30.8	–	47.3 150 000 CI/31.7	–	–	–	–	31.5	630	
	28	–	–	–	–	–	–	–	11.7 37 500 C2I/28.6	20.5 66 800 C2I/28.9	27.7 89 850 C2I/28.8	39 129 700 C2I/29.5	53.9 183 700 C2I/30.3	74.4 250 300 C2I/29.9	106 357 600 C2I/30.1	126 398 300 C2I/28	158 496 800 C2I/28	195 633 500 C2I/28.8	28	560	
224 000	200	–	–	–	–	–	9 000 ICI/192	20 850 ICI/199	–	40 100 ICI/196	–	81 850 ICI/196	–	–	–	–	–	–			
	160	–	–	–	–	–	–	–	9.71 32 900 C2I/151	14.9 51 600 C2I/154	21 74 900 C2I/158	30.5 104 100 C2I/151	42.7 150 000 C2I/156	60.9 214 300 C2I/156	83.1 288 000 C2I/154	– 375 400 C2I/156	– 441 700 C2I/156	– 600 000 C2I/161	160	2800	18
	160	–	–	–	–	–	3.19 11 050 ICI/154	6.31 22 600 ICI/159	7.07 25 300 ICI/159	12.3 43 450 ICI/157	13.8 50 100 ICI/162	28 98 950 ICI/157	–	–	–	–	–	–	160	2800	
	125	–	–	–	–	–	–	–	10.6 36 600 C2I/123	16.9 61 550 C2I/129	22.2 81 200 C2I/130	34.1 122 100 C2I/127	43.4 153 100 C2I/125	70.8 245 000 C2I/123	85.9 303 400 C2I/125	116 422 600 C2I/129	145 528 300 C2I/129	162 578 800 C2I/127	125	2240	
	125	–	–	–	–	–	3.56 12 350 ICI/123	6.57 23 500 ICI/127	9.08 32 500 ICI/127	14.6 51 650 ICI/126	17.7 64 350 ICI/130	29.4 104 200 ICI/126	–	–	–	–	–	–	125	2240	
	100	–	–	–	–	–	–	–	11 37 700 C2I/98.2	17 61 550 C2I/103	22.8 82 950 C2I/104	34.3 122 100 C2I/102	47.2 165 800 C2I/100	71.1 245 000 C2I/98.5	90.4 317 600 C2I/100	117 422 600 C2I/103	146 528 200 C2I/103	176 627 200 C2I/102	100	1800	

For n_1 lower than 560 rpm see page 195.

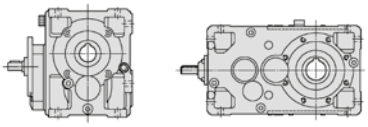

$n_{N2} \cdot L_h$ rpm · h	i_N	50	63	64	80	81	100	125	140	160	180	200	225	250	280	320	321	360	i_N	n_1 rpm	n_{N2}
		Nominal output power P_{N2} [hp] Nominal output torque T_{N2} [lb in] Train of gears / ratio … / i																			
224 000	100	– 2 190 ICI/99.4	0.63 2 190 ICI/99.4	0.75 2 600 ICI/99.4	1.24 4 500 ICI/103	1.46 5 290 ICI/103	3.31 11 650 ICI/100	7.35 26 150 ICI/102	9.39 32 950 ICI/100	14.3 52 800 ICI/106	20.4 73 000 ICI/102	28.9 106 800 ICI/106	–	–	–	–	–	–	100	1800	18
	90	–	–	–	–	–	–	–	10.9 37 850 C2I/87.8	18.9 67 300 C2I/90.4	20.7 73 450 C2I/90	37.6 130 300 C2I/87.9	47.2 167 900 C2I/90.3	71.7 251 400 C2I/89	87.5 309 200 C2I/89.7	115 401 500 C2I/88.8	143 501 800 C2I/88.8	172 618 500 C2I/91.4	90	1600	
	80	–	–	–	–	–	–	–	11.5 40 650 C2I/78.6	16.6 61 600 C2I/82.7	22.2 83 050 C2I/83.1	33.4 122 200 C2I/81.4	48.3 174 500 C2I/80.2	69.1 245 200 C2I/78.8	86.6 313 100 C2I/80.3	114 422 900 C2I/82.6	142 528 700 C2I/82.6	167 610 700 C2I/81.2	80	1400	
	80	0.41 1 380 ICI/75.2	0.67 2 410 ICI/79.5	0.83 2 960 ICI/79.5	1.38 5 130 ICI/82.7	1.59 5 930 ICI/82.7	3.2 11 050 ICI/76.7	6.42 22 600 ICI/78.1	7.53 26 500 ICI/78.1	13.3 46 900 ICI/78.1	14.6 53 000 ICI/80.5	27.8 97 900 ICI/78.1	–	–	–	–	–	–	80	1400	
	71	–	–	–	–	–	–	–	10.6 37 600 C2I/70.2	18.5 67 550 C2I/72.3	20.3 73 800 C2I/72	36.9 130 700 C2I/70.3	46.6 169 700 C2I/72.2	70.3 252 300 C2I/71.2	86.9 314 200 C2I/71.7	112 402 900 C2I/71.1	141 503 600 C2I/71.1	170 628 400 C2I/73.1	71	1250	
	63	–	–	–	–	–	–	–	11.8 41 000 C2I/62	16.8 61 600 C2I/65.2	22.5 83 000 C2I/65.5	33.8 122 200 C2I/64.2	49 174 400 C2I/63.2	70.1 245 100 C2I/62.1	89.2 317 700 C2I/63.3	115 422 700 C2I/65.1	144 528 400 C2I/65.1	192 690 500 C2I/64	63	1120	
	63	0.41 1 380 ICI/60.1	0.67 2 410 ICI/63.6	0.83 2 960 ICI/63.6	1.38 5 130 ICI/66.2	1.59 5 930 ICI/66.2	3.58 12 350 ICI/61.3	6.68 23 500 ICI/62.5	9.23 32 450 ICI/62.5	14.7 51 600 ICI/62.5	18.3 66 400 ICI/64.4	29.6 104 200 ICI/62.5	–	–	–	–	–	–	63	1120	
	56	–	–	–	–	–	–	–	11.3 39 350 C2I/55.4	18.8 67 400 C2I/57	20.6 73 700 C2I/56.8	37.3 130 400 C2I/55.5	49.6 178 200 C2I/56.9	71.2 251 800 C2I/56.1	100 356 900 C2I/56.6	114 402 000 C2I/56	142 502 500 C2I/56	194 703 500 C2I/57.6	56	1000	
	50	–	–	–	–	–	–	–	11.6 41 000 C2I/50.4	16.9 61 600 C2I/52.1	22.6 83 000 C2I/52.4	32.4 122 300 C2I/53.9	47 174 600 C2I/53.1	67.2 245 400 C2I/52.1	85.5 318 100 C2I/53.1	118 422 500 C2I/51.3	147 528 100 C2I/51.3	195 690 000 C2I/50.5	50	900	
	50	0.43 1 490 ICI/49	0.74 2 650 ICI/50.9	0.87 3 110 ICI/50.9	1.52 5 640 ICI/53	1.7 6 320 ICI/53	3.36 11 750 ICI/49.9	7.47 26 150 ICI/50	9.54 32 950 ICI/49.3	14.8 54 450 ICI/52.5	21.1 74 900 ICI/50.8	29.9 110 100 ICI/52.5	–	–	–	–	–	–	50	900	
	45	–	–	–	–	–	–	–	10.8 38 500 C2I/45.1	18.8 67 400 C2I/45.6	25.2 90 000 C2I/45.4	35.8 131 400 C2I/46.6	49.4 186 100 C2I/47.8	68.3 253 600 C2I/47.1	96.8 362 300 C2I/47.5	115 401 100 C2I/44.2	144 501 400 C2I/44.2	191 681 700 C2I/45.4	45	800	
	40	–	–	–	–	–	–	–	10.9 37 500 C2I/38.7	19.5 68 600 C2I/39.5	22.4 81 700 C2I/41	36 136 000 C2I/42.6	47.6 175 000 C2I/41.4	70.9 269 400 C2I/42.8	97 358 000 C2I/41.6	131 460 700 C2I/39.5	164 575 900 C2I/39.5	175 637 800 C2I/41	40	710	
	40	0.47 1 630 ICI/38.6	0.78 2 790 ICI/40.1	0.96 3 430 ICI/40.1	1.6 5 930 ICI/41.8	1.85 6 860 ICI/41.8	4.1 14 350 ICI/39.4	8.04 28 150 ICI/39.4	8.64 30 850 ICI/40.2	16.8 61 600 ICI/41.4	19.7 72 650 ICI/41.6	31.5 115 700 ICI/41.4	–	–	–	–	–	–	40	710	
	35.5	–	–	–	–	–	–	–	10 37 750 C2I/37.5	18.1 67 850 C2I/37.5	23.1 86 050 C2I/37.3	37 130 600 C2I/35.3	46.5 168 600 C2I/36.2	68.1 253 700 C2I/37.2	94.2 353 800 C2I/37.5	111 403 700 C2I/36.3	139 504 600 C2I/36.3	178 663 300 C2I/37.3	35.5	630	
	31.5	–	–	–	–	–	–	–	11.2 40 350 C2I/32	16.6 61 600 C2I/33.1	22.2 83 050 C2I/33.2	31.8 122 400 C2I/34.2	46.1 174 700 C2I/33.7	66 245 600 C2I/33.1	83.9 318 300 C2I/33.7	131 461 100 C2I/31.3	163 576 400 C2I/31.3	173 633 800 C2I/32.5	31.5	560	
	31.5	0.47 1 710 ICI/32.1	0.8 2 960 ICI/33	0.92 3 430 ICI/33	1.58 5 580 ICI/31.4	1.85 6 550 ICI/31.4	3.58 13 200 ICI/32.8	7.32 26 700 ICI/32.4	–	13.9 48 900 ICI/31.4	–	28 103 000 ICI/32.7	–	–	–	–	–	–	31.5	560	
	31.5	–	0.59 2 060 CI/31.3	0.66 2 330 CI/31.3	1.16 4 250 CI/32.5	1.45 5 290 CI/32.5	2.82 9 570 CI/30.1	5.29 18 600 CI/31.3	–	10.3 35 500 CI/30.8	–	21.1 73 000 CI/30.8	–	42 150 000 CI/31.7	–	–	–	–	31.5	560	
200 000	200	–	–	–	–	–	9 250 ICI/192	20 900 ICI/199	–	40 250 ICI/196	–	82 150 ICI/196	–	–	–	–	–	–			

For n_1 lower than 560 rpm see page 195.

9 - Bevel helical gear reducer selection tables

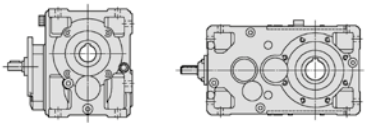

$n_{N2} \cdot L_h$ rpm · h	i_N	50	63	64	80	81	100	125	140	160	180	200	225	250	280	320	321	360	i_N	n_1 rpm	n_{N2}
		Nominal output power P_{N2} [hp] Nominal output torque T_{N2} [lb in] Train of gears / ratio … / i																			
200 000	160	–	–	–	–	–	–	–	8.7 33 050 C2I/151	13.3 51 800 C2I/154	18.8 75 150 C2I/158	27.3 104 400 C2I/151	38.3 150 600 C2I/156	54.6 215 100 C2I/156	74.5 289 000 C2I/154	– 376 800 C2I/156	– 443 300 C2I/156	– 600 000 C2I/161	160	2500	16
	160	–	–	–	–	–	2.86 11 100 ICI/154	5.66 22 650 ICI/159	6.34 25 400 ICI/159	11 43 600 ICI/157	12.3 50 300 ICI/162	25.1 99 300 ICI/157	–	–	–	–	–	–	160	2500	
	125	–	–	–	–	–	–	–	9.5 36 750 C2I/123	15.3 62 100 C2I/129	19.9 81 500 C2I/130	30.7 123 000 C2I/127	38.9 153 600 C2I/125	63.6 246 700 C2I/123	79.4 313 900 C2I/125	105 427 000 C2I/129	131 533 700 C2I/129	150 598 900 C2I/127	125	2000	
	125	–	–	–	–	–	3.19 12 400 ICI/123	5.89 23 600 ICI/127	8.14 32 600 ICI/127	13.1 51 800 ICI/126	15.8 64 600 ICI/130	26.4 104 600 ICI/126	–	–	–	–	–	–	125	2000	
	100	–	–	–	–	–	–	–	9.78 37 850 C2I/98.2	15.3 62 100 C2I/103	20.5 83 700 C2I/104	30.7 123 000 C2I/102	42.2 166 400 C2I/100	63.6 246 700 C2I/98.5	80.9 319 700 C2I/100	105 427 000 C2I/103	131 533 700 C2I/103	162 649 700 C2I/102	100	1600	
	100	–	0.56 2 190 ICI/99.4	0.67 2 610 ICI/99.4	1.11 4 520 ICI/103	1.3 5 310 ICI/103	2.96 11 650 ICI/100	6.55 26 250 ICI/102	8.38 33 100 ICI/100	12.9 53 550 ICI/106	18.7 75 200 ICI/102	26 108 300 ICI/106	–	–	–	–	–	–	100	1600	
	90	–	–	–	–	–	–	–	9.62 38 000 C2I/87.8	16.9 68 600 C2I/90.4	18.3 74 200 C2I/90	33.6 132 900 C2I/87.9	41.5 168 600 C2I/90.3	64 256 500 C2I/89	77.8 314 200 C2I/89.7	102 409 600 C2I/88.8	128 512 100 C2I/88.8	153 628 400 C2I/91.4	90	1400	
	80	–	–	–	–	–	–	–	10.4 41 300 C2I/78.6	15 62 300 C2I/82.7	20 84 000 C2I/83.1	30.1 123 400 C2I/81.4	43.6 176 100 C2I/80.2	62.3 247 500 C2I/78.8	79.3 320 900 C2I/80.3	103 428 500 C2I/82.6	129 535 700 C2I/82.6	154 629 900 C2I/81.2	80	1250	
	80	0.36 1 380 ICI/75.2	0.6 2 410 ICI/79.5	0.74 2 960 ICI/79.5	1.23 5 130 ICI/82.7	1.42 5 930 ICI/82.7	2.87 11 100 ICI/76.7	5.75 22 650 ICI/78.1	6.73 26 500 ICI/78.1	11.9 46 900 ICI/78.1	13.1 53 000 ICI/80.5	25.2 99 300 ICI/78.1	–	–	–	–	–	–	80	1250	
	71	–	–	–	–	–	–	–	9.83 38 850 C2I/70.2	16.9 68 600 C2I/72.3	18.3 74 200 C2I/72	33.6 132 900 C2I/70.3	43.2 175 400 C2I/72.2	64 256 500 C2I/71.2	77.8 314 200 C2I/71.7	102 409 600 C2I/71.1	128 512 100 C2I/71.1	153 628 400 C2I/73.1	71	1120	
	63	–	–	–	–	–	–	–	10.5 41 200 C2I/62	15.1 62 200 C2I/65.2	20.3 83 800 C2I/65.5	30.4 123 100 C2I/64.2	44.1 175 800 C2I/63.2	63.1 247 000 C2I/62.1	80.2 320 200 C2I/63.3	104 427 600 C2I/65.1	130 534 500 C2I/65.1	173 698 400 C2I/64	63	1000	
	63	0.36 1 380 ICI/60.1	0.6 2 410 ICI/63.6	0.74 2 960 ICI/63.6	1.23 5 130 ICI/66.2	1.42 5 930 ICI/66.2	3.2 12 400 ICI/61.3	5.99 23 600 ICI/62.5	8.27 32 600 ICI/62.5	13.1 51 800 ICI/62.5	16.4 66 400 ICI/64.4	26.5 104 500 ICI/62.5	–	–	–	–	–	–	63	1000	
	56	–	–	–	–	–	–	–	10.2 39 500 C2I/55.4	17.2 68 500 C2I/57	18.6 74 100 C2I/56.8	34.1 132 500 C2I/55.5	44.8 178 700 C2I/56.9	65.1 255 800 C2I/56.1	90.4 358 100 C2I/56.6	104 408 500 C2I/56	130 510 600 C2I/56	180 726 100 C2I/57.6	56	900	
	50	–	–	–	–	–	–	–	10.4 41 300 C2I/50.4	15.1 62 200 C2I/52.1	20.3 83 800 C2I/52.4	29.2 124 000 C2I/53.9	42.3 177 000 C2I/53.1	60.6 248 800 C2I/52.1	77 322 500 C2I/53.1	106 426 600 C2I/51.3	132 533 300 C2I/51.3	175 696 800 C2I/50.5	50	800	
	50	0.39 1 490 ICI/49	0.66 2 660 ICI/50.9	0.78 3 120 ICI/50.9	1.36 5 670 ICI/53	1.52 6 350 ICI/53	2.98 11 750 ICI/49.9	6.66 26 250 ICI/50	8.52 33 050 ICI/49.3	13.2 54 450 ICI/52.5	18.8 75 150 ICI/50.8	26.6 110 100 ICI/52.5	–	–	–	–	–	–	50	800	
	45	–	–	–	–	–	–	–	9.97 39 900 C2I/45.1	16.9 68 600 C2I/45.6	22.3 90 000 C2I/45.4	32.4 133 800 C2I/46.6	44.7 189 500 C2I/47.8	61.7 258 200 C2I/47.1	87.5 368 900 C2I/47.5	104 408 400 C2I/44.2	130 510 500 C2I/44.2	175 706 500 C2I/45.4	45	710	
	40	–	–	–	–	–	–	–	9.69 37 500 C2I/38.7	17.3 68 600 C2I/39.5	20 82 000 C2I/41	31.9 136 000 C2I/42.6	42.2 175 000 C2I/41.4	64 274 300 C2I/42.8	86.4 359 300 C2I/41.6	119 469 200 C2I/39.5	148 586 400 C2I/39.5	161 661 100 C2I/41	40	630	
	40	0.42 1 640 ICI/38.6	0.69 2 790 ICI/40.1	0.85 3 430 ICI/40.1	1.42 5 930 ICI/41.8	1.64 6 860 ICI/41.8	3.68 14 500 ICI/39.4	7.2 28 400 ICI/39.4	7.95 31 950 ICI/40.2	15 62 250 ICI/41.4	17.5 72 900 ICI/41.6	28 116 100 ICI/41.4	–	–	–	–	–	–	40	630	

For n_1 lower than 560 rpm see page 195.

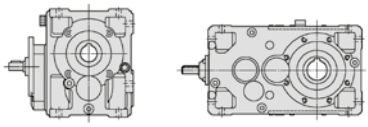

$n_{N2} \cdot L_h$ rpm · h	i_N	Nominal output power P_{N2} [hp] / Nominal output torque T_{N2} [lb in] / Train of gears / ratio … / i																	i_N	n_1 rpm	n_{N2}
		50	63	64	80	81	100	125	140	160	180	200	225	250	280	320	321	360			
200 000	35.5	–	–	–	–	–	–	–	9.25 39 100 C2I/37.5	16.3 68 600 C2I/37.5	21.2 89 150 C2I/37.3	33.5 133 000 C2I/35.3	42.8 174 700 C2I/36.2	61.6 258 300 C2I/37.2	84 355 000 C2I/37.5	101 410 900 C2I/36.3	126 513 600 C2I/36.3	163 685 900 C2I/37.3	35.5	560	**16**
180 000	200	–	–	–	–	–	2.2 9 500 ICI/192	4.69 21 000 ICI/199	–	9.13 40 400 ICI/196	–	18.6 82 450 ICI/196	–	–	–	–	–	–	200	2800	**14**
	160	–	–	–	–	–	–	–	7.82 33 150 C2I/151	12 51 950 C2I/154	16.9 75 450 C2I/158	24.6 104 800 C2I/151	34.4 151 100 C2I/156	49.1 215 800 C2I/156	67 290 000 C2I/154	86 378 100 C2I/156	101 444 800 C2I/156	136 615 000 C2I/161	160	2240	
	160	–	–	–	–	–	2.57 11 100 ICI/154	5.09 22 750 ICI/159	5.7 25 500 ICI/159	9.95 44 000 ICI/157	11.1 50 750 ICI/162	22.5 99 650 ICI/157	–	–	–	–	–	–	160	2240	
	125	–	–	–	–	–	–	–	8.58 36 850 C2I/123	13.9 63 100 C2I/129	18 81 750 C2I/130	28.1 124 900 C2I/127	35.1 154 100 C2I/125	58.2 250 600 C2I/123	71.7 315 100 C2I/125	96 433 900 C2I/129	120 542 300 C2I/129	139 618 100 C2I/127	125	1800	
	125	–	–	–	–	–	2.88 12 400 ICI/123	5.32 23 700 ICI/127	7.35 32 700 ICI/127	11.8 52 000 ICI/126	14.3 64 800 ICI/130	23.8 104 900 ICI/126	–	–	–	–	–	–	125	1800	
	100	–	–	–	–	–	–	–	8.59 38 000 C2I/98.2	13.6 63 350 C2I/103	18.2 85 150 C2I/104	27.4 125 500 C2I/102	37 167 100 C2I/100	56.8 251 700 C2I/98.5	72.2 326 200 C2I/100	93.7 435 700 C2I/103	117 544 600 C2I/103	148 676 300 C2I/102	100	1400	
	100	–	0.49 2 200 ICI/99.4	0.59 2 620 ICI/99.4	0.98 4 540 ICI/103	1.15 5 330 ICI/103	2.6 11 750 ICI/100	5.76 26 350 ICI/102	7.36 33 200 ICI/100	11.5 54 450 ICI/106	16.4 75 500 ICI/102	23.2 110 100 ICI/106	–	–	–	–	–	–	100	1400	
	90	–	–	–	–	–	–	–	8.62 38 150 C2I/87.8	15.1 68 600 C2I/90.4	16.4 74 650 C2I/90	30.5 135 200 C2I/87.9	37.2 169 200 C2I/90.3	58.2 261 000 C2I/89	70.9 320 500 C2I/89.7	93 416 700 C2I/88.8	116 520 900 C2I/88.8	137 629 700 C2I/91.4	90	1250	
	80	–	–	–	–	–	–	–	9.49 41 950 C2I/78.6	13.6 63 350 C2I/82.7	18.2 85 150 C2I/83.1	27.4 125 500 C2I/81.4	39.7 179 100 C2I/80.2	56.8 251 700 C2I/78.8	72.2 326 200 C2I/80.3	93.7 435 700 C2I/82.6	117 544 600 C2I/82.6	142 651 000 C2I/81.2	80	1120	
	80	0.33 1 390 ICI/75.2	0.54 2 410 ICI/79.5	0.66 2 960 ICI/79.5	1.1 5 130 ICI/82.7	1.27 5 930 ICI/82.7	2.58 11 100 ICI/76.7	5.17 22 750 ICI/78.1	6.03 26 500 ICI/78.1	10.7 46 900 ICI/78.1	11.7 53 000 ICI/80.5	22.7 99 650 ICI/78.1	–	–	–	–	–	–	80	1120	
	71	–	–	–	–	–	–	–	8.96 39 650 C2I/70.2	15.1 68 600 C2I/72.3	16.4 74 650 C2I/72	30.5 135 200 C2I/70.3	39.4 179 500 C2I/72.2	58.2 261 000 C2I/71.2	69.5 314 200 C2I/71.7	93 416 700 C2I/71.1	116 520 900 C2I/71.1	136 628 400 C2I/73.1	71	1000	
	63	–	–	–	–	–	–	–	9.65 41 850 C2I/62	13.8 63 200 C2I/65.2	18.5 85 100 C2I/65.5	27.8 125 100 C2I/64.2	40.3 178 600 C2I/63.2	57.7 251 000 C2I/62.1	73.4 325 300 C2I/63.3	95.3 434 500 C2I/65.1	119 543 100 C2I/65.1	158 709 600 C2I/64	63	900	
	63	0.33 1 390 ICI/60.1	0.54 2 410 ICI/63.6	0.67 2 960 ICI/63.6	1.11 5 130 ICI/66.2	1.28 5 930 ICI/66.2	2.89 12 400 ICI/61.3	5.41 23 650 ICI/62.5	7.47 32 700 ICI/62.5	11.9 51 950 ICI/62.5	14.7 66 400 ICI/64.4	24 104 900 ICI/62.5	–	–	–	–	–	–	63	900	
	56	–	–	–	–	–	–	–	9.09 39 650 C2I/55.4	15.3 68 600 C2I/57	16.7 74 550 C2I/56.8	30.9 134 900 C2I/55.5	40 179 400 C2I/56.9	58.9 260 400 C2I/56.1	80.6 359 400 C2I/56.6	94.2 415 800 C2I/56	118 519 800 C2I/56	161 732 100 C2I/57.6	56	800	
	50	–	–	–	–	–	–	–	9.39 42 050 C2I/50.4	13.7 63 300 C2I/52.1	18.3 85 300 C2I/52.4	26.4 126 300 C2I/53.9	38.3 180 300 C2I/53.1	54.7 253 300 C2I/52.1	69.6 328 400 C2I/53.1	95.4 434 400 C2I/51.3	119 543 000 C2I/51.3	158 709 400 C2I/50.5	50	710	
	50	0.34 1 500 ICI/49	0.59 2 670 ICI/50.9	0.69 3 130 ICI/50.9	1.21 5 690 ICI/53	1.35 6 370 ICI/53	2.65 11 750 ICI/49.9	5.94 26 350 ICI/50	7.59 33 200 ICI/49.3	11.7 54 450 ICI/52.5	16.7 75 450 ICI/50.8	23.6 110 100 ICI/52.5	–	–	–	–	–	–	50	710	
	45	–	–	–	–	–	–	–	9.17 41 350 C2I/45.1	15 68 600 C2I/45.6	19.8 90 000 C2I/45.4	29.2 136 000 C2I/46.6	40.3 192 900 C2I/47.8	55.8 262 900 C2I/47.1	79.1 375 600 C2I/47.5	94.1 415 800 C2I/44.2	118 519 800 C2I/44.2	161 732 300 C2I/45.4	45	630	

For n_1 lower than 560 rpm see page 195.

9 - Bevel helical gear reducer selection tables

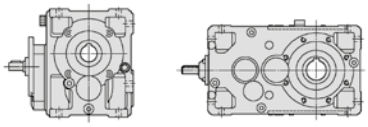

$n_{N2} \cdot L_h$ rpm · h	i_N	50	63	64	80	81	100	125	140	160	180	200	225	250	280	320	321	360	i_N	n_1 rpm	n_{N2}
		Nominal output power P_{N2} [hp] Nominal output torque T_{N2} [lb in] Train of gears / ratio … / i																			
180 000	40	–	–	–	–	–	–	–	8.62 37 500 C2I/38.7	15.4 68 600 C2I/39.5	17.8 82 300 C2I/41	28.4 136 000 C2I/42.6	37.5 175 000 C2I/41.4	57.8 278 800 C2I/42.8	77.1 360 700 C2I/41.6	107 477 600 C2I/39.5	134 597 000 C2I/39.5	148 684 900 C2I/41	40	560	14
	40	0.38 1 670 ICI/38.6	0.62 2 790 ICI/40.1	0.77 3 470 ICI/40.1	1.26 5 930 ICI/41.8	1.48 6 950 ICI/41.8	3.33 14 750 ICI/39.4	6.51 28 900 ICI/39.4	7.32 33 100 ICI/40.2	13.6 63 350 ICI/41.4	15.6 73 000 ICI/41.6	25 116 500 ICI/41.4	–	–	–	–	–	–	40	560	
160 000	200	–	–	–	–	–	2 9 680 ICI/192	4.21 21 050 ICI/199	–	8.18 40 500 ICI/196	–	16.7 82 750 ICI/196	–	–	–	–	–	–	200	2500	12.5
	160	–	–	–	–	–	–	–	7.01 33 300 C2I/151	10.8 52 400 C2I/154	15.2 76 050 C2I/158	22.1 105 500 C2I/151	30.9 152 100 C2I/156	44.1 217 200 C2I/156	60.2 291 900 C2I/154	77.6 382 000 C2I/156	91.3 449 400 C2I/156	121 615 000 C2I/161	160	2000	
	160	–	–	–	–	–	2.3 11 150 ICI/154	4.56 22 850 ICI/159	5.1 25 550 ICI/159	9.01 44 600 ICI/157	10.1 51 450 ICI/162	20.2 100 000 ICI/157	–	–	–	–	–	–	160	2000	
	125	–	–	–	–	–	–	–	7.65 37 000 C2I/123	12.6 64 250 C2I/129	16 82 050 C2I/130	25.4 127 200 C2I/127	31.3 154 700 C2I/125	52.6 255 100 C2I/123	64 316 200 C2I/125	86.9 441 700 C2I/129	109 552 100 C2I/129	128 640 300 C2I/127	125	1600	
	125	–	–	–	–	–	2.59 12 550 ICI/123	4.78 23 950 ICI/127	6.55 32 850 ICI/127	10.6 52 550 ICI/126	12.8 65 350 ICI/130	21.4 106 100 ICI/126	–	–	–	–	–	–	125	1600	
	100	–	–	–	–	–	–	–	7.7 38 100 C2I/98.2	12.4 64 450 C2I/103	16.3 85 450 C2I/104	24.9 127 600 C2I/102	33.2 167 700 C2I/100	51.6 256 000 C2I/98.5	65.6 331 900 C2I/100	85.2 443 200 C2I/103	106 554 100 C2I/103	136 696 000 C2I/102	100	1250	
	100	–	0.44 2 230 ICI/99.4	0.53 2 630 ICI/99.4	0.87 4 560 ICI/103	1.03 5 350 ICI/103	2.33 11 750 ICI/100	5.16 26 450 ICI/102	6.65 33 600 ICI/100	10.2 54 450 ICI/106	14.8 76 450 ICI/102	20.7 110 100 ICI/106	–	–	–	–	–	–	100	1250	
	90	–	–	–	–	–	–	–	7.75 38 300 C2I/87.8	13.5 68 600 C2I/90.4	14.8 75 000 C2I/90	27.5 136 000 C2I/87.9	33.4 169 800 C2I/90.3	53 265 300 C2I/89	65.6 331 200 C2I/89.7	84.7 423 700 C2I/88.8	106 529 600 C2I/88.8	127 650 800 C2I/91.4	90	1120	
	80	–	–	–	–	–	–	–	8.62 42 700 C2I/78.6	12.4 64 450 C2I/82.7	16.3 85 450 C2I/83.1	24.9 127 600 C2I/81.4	36.1 182 200 C2I/80.2	51.6 256 000 C2I/78.8	65.6 331 900 C2I/80.3	85.2 443 200 C2I/82.6	106 554 100 C2I/82.6	132 673 600 C2I/81.2	80	1000	
	80	0.29 1 400 ICI/75.2	0.48 2 410 ICI/79.5	0.59 2 960 ICI/79.5	0.98 5 130 ICI/82.7	1.14 5 930 ICI/82.7	2.31 11 150 ICI/76.7	4.63 22 800 ICI/78.1	5.38 26 500 ICI/78.1	9.53 46 900 ICI/78.1	10.4 53 000 ICI/80.5	20.3 100 000 ICI/78.1	–	–	–	–	–	–	80	1000	
	71	–	–	–	–	–	–	–	8.09 39 800 C2I/70.2	13.5 68 600 C2I/72.3	14.9 75 000 C2I/72	27.6 136 000 C2I/70.3	35.6 180 000 C2I/72.2	53.2 265 200 C2I/71.2	63.6 319 400 C2I/71.7	85.1 423 400 C2I/71.1	106 529 300 C2I/71.1	123 628 400 C2I/73.1	71	900	
	63	–	–	–	–	–	–	–	8.73 42 600 C2I/62	12.5 64 300 C2I/65.2	16.5 85 400 C2I/65.5	25.2 127 300 C2I/64.2	36.5 181 800 C2I/63.2	52.2 255 500 C2I/62.1	66.4 331 100 C2I/63.3	86.2 442 300 C2I/65.1	108 552 800 C2I/65.1	143 722 300 C2I/64	63	800	
	63	0.29 1 400 ICI/60.1	0.48 2 410 ICI/63.6	0.59 2 960 ICI/63.6	0.98 5 130 ICI/66.2	1.14 5 930 ICI/66.2	2.6 12 550 ICI/61.3	4.85 23 850 ICI/62.5	6.66 32 800 ICI/62.5	10.7 52 500 ICI/62.5	13.1 66 400 ICI/64.4	21.5 106 000 ICI/62.5	–	–	–	–	–	–	63	800	
	56	–	–	–	–	–	–	–	8.09 39 800 C2I/55.4	13.6 68 600 C2I/57	14.9 75 000 C2I/56.8	27.6 136 000 C2I/55.5	35.6 180 000 C2I/56.9	53.2 265 100 C2I/56.1	71.8 360 800 C2I/56.6	85.1 423 400 C2I/56	106 529 200 C2I/56	144 734 800 C2I/57.6	56	710	
	50	–	–	–	–	–	–	–	8.48 42 800 C2I/50.4	12.4 64 450 C2I/52.1	16.6 86 900 C2I/52.4	23.9 128 600 C2I/53.9	34.6 183 600 C2I/53.1	49.4 258 000 C2I/52.1	62.9 334 400 C2I/53.1	86.2 442 300 C2I/51.3	108 552 900 C2I/51.3	143 722 400 C2I/50.5	50	630	
	50	0.31 1 500 ICI/49	0.53 2 680 ICI/50.9	0.62 3 140 ICI/50.9	1.08 5 710 ICI/53	1.2 6 390 ICI/53	2.35 11 750 ICI/49.9	5.29 26 450 ICI/50	6.79 33 500 ICI/49.3	10.4 54 450 ICI/52.5	15 76 250 ICI/50.8	21 110 100 ICI/52.5	–	–	–	–	–	–	50	630	

For n_1 lower than 560 rpm see page 195.

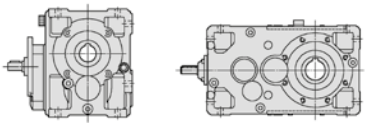

$n_{N2} \cdot L_h$ rpm · h	i_N	50	63	64	80	81	100	125	140	160	180	200	225	250	280	320	321	360	i_N	n_1 rpm	n_{N2}
		Nominal output power P_{N2} [hp] Nominal output torque T_{N2} [lb in] Train of gears / ratio ... / i																			
160 000	45	–	–	–	–	–	–	–	8.45 42 850 C2I/45.1	13.4 68 600 C2I/45.6	17.6 90 000 C2I/45.4	26 136 000 C2I/46.6	35.9 192 900 C2I/47.8	50.5 267 700 C2I/47.1	71.5 382 400 C2I/47.5	85.2 423 300 C2I/44.2	106 529 100 C2I/44.2	148 758 700 C2I/45.4	45	560	**12.5**
140 000	200	–	–	–	–	–	1.8 9 720 ICI/192	3.78 21 150 ICI/199	–	7.36 40 650 ICI/196	–	15 83 000 ICI/196	–	–	–	–	–	–	200	2240	**11.2**
	160	–	–	–	–	–	–	–	6.41 33 800 C2I/151	9.88 53 250 C2I/154	13.9 77 300 C2I/158	20.2 107 200 C2I/151	28.3 154 500 C2I/156	40.4 220 700 C2I/156	55.1 296 600 C2I/154	71 388 100 C2I/156	83.5 456 600 C2I/156	112 630 000 C2I/161	160	1800	
	160	–	–	–	–	–	2.08 11 200 ICI/154	4.12 22 900 ICI/159	4.65 25 900 ICI/159	8.21 45 150 ICI/157	9.19 52 100 ICI/162	18.2 100 300 ICI/157	–	–	–	–	–	–	160	1800	
	125	–	–	–	–	–	–	–	6.72 37 150 C2I/123	11.3 65 550 C2I/129	14.1 82 400 C2I/130	22.7 129 800 C2I/127	27.5 155 300 C2I/125	47 260 300 C2I/123	56.2 317 600 C2I/125	77.6 450 700 C2I/129	97 563 300 C2I/129	113 644 600 C2I/127	125	1400	
	125	–	–	–	–	–	2.31 12 800 ICI/123	4.27 24 400 ICI/127	5.76 32 950 ICI/127	9.48 53 650 ICI/126	11.4 66 400 ICI/130	19.1 108 200 ICI/126	–	–	–	–	–	–	125	1400	
	100	–	–	–	–	–	–	–	6.92 38 250 C2I/98.2	11.3 65 550 C2I/103	14.7 85 750 C2I/104	22.7 129 800 C2I/102	29.8 168 300 C2I/100	47 260 300 C2I/98.5	59.7 337 400 C2I/100	77.6 450 700 C2I/103	97 563 300 C2I/103	122 698 400 C2I/102	100	1120	
	100	–	0.4 2 250 ICI/99.4	0.47 2 640 ICI/99.4	0.79 4 570 ICI/103	0.92 5 370 ICI/103	2.09 11 800 ICI/100	4.64 26 550 ICI/102	6.06 34 150 ICI/100	9.16 54 450 ICI/106	13.1 75 000 ICI/102	18.5 110 100 ICI/106	–	–	–	–	–	–	100	1120	
	90	–	–	–	–	–	–	–	6.95 38 400 C2I/87.8	12 68 600 C2I/90.4	13.2 75 000 C2I/90	24.5 136 000 C2I/87.9	29.9 170 400 C2I/90.3	48.1 269 900 C2I/89	60.6 342 600 C2I/89.7	77 431 000 C2I/88.8	96.2 538 800 C2I/88.8	117 673 300 C2I/91.4	90	1000	
	80	–	–	–	–	–	–	–	7.88 43 400 C2I/78.6	11.3 65 500 C2I/82.7	14.7 85 700 C2I/83.1	22.7 129 700 C2I/81.4	33 185 100 C2I/80.2	47.2 260 200 C2I/78.8	60 337 200 C2I/80.3	77.9 450 400 C2I/82.6	97.3 563 000 C2I/82.6	122 695 200 C2I/81.2	80	900	
	80	0.27 1 420 ICI/75.2	0.43 2 410 ICI/79.5	0.53 2 960 ICI/79.5	0.89 5 130 ICI/82.7	1.02 5 930 ICI/82.7	2.09 11 200 ICI/76.7	4.18 22 900 ICI/78.1	4.84 26 500 ICI/78.1	8.57 46 900 ICI/78.1	9.4 53 000 ICI/80.5	18.3 100 300 ICI/78.1	–	–	–	–	–	–	80	900	
	71	–	–	–	–	–	–	–	7.22 39 950 C2I/70.2	12 68 600 C2I/72.3	13.2 75 000 C2I/72	24.5 136 000 C2I/70.3	31.6 180 000 C2I/72.2	48.1 269 900 C2I/71.2	58.6 330 900 C2I/71.7	77 431 000 C2I/71.1	96.2 538 800 C2I/71.1	113 648 200 C2I/73.1	71	800	
	63	–	–	–	–	–	–	–	7.89 43 400 C2I/62	11.3 65 500 C2I/65.2	14.7 85 700 C2I/65.5	22.8 129 700 C2I/64.2	33 185 100 C2I/63.2	47.2 260 100 C2I/62.1	60 337 200 C2I/63.3	77.9 450 300 C2I/65.1	97.4 562 900 C2I/65.1	129 735 500 C2I/64	63	710	
	63	0.27 1 420 ICI/60.1	0.43 2 410 ICI/63.6	0.52 2 960 ICI/63.6	0.87 5 130 ICI/66.2	1.01 5 930 ICI/66.2	2.35 12 800 ICI/61.3	4.38 24 300 ICI/62.5	5.94 32 950 ICI/62.5	9.64 53 500 ICI/62.5	11.6 66 400 ICI/64.4	19.5 107 900 ICI/62.5	–	–	–	–	–	–	63	710	
	56	–	–	–	–	–	–	–	7.21 39 950 C2I/55.4	12 68 600 C2I/57	13.2 75 000 C2I/56.8	24.5 136 000 C2I/55.5	31.6 180 000 C2I/56.9	48.1 270 000 C2I/56.1	64 362 100 C2I/56.6	76.9 431 100 C2I/56	96.1 538 900 C2I/56	128 737 600 C2I/57.6	56	630	
	50	–	–	–	–	–	–	–	7.68 43 600 C2I/50.4	11.2 65 650 C2I/52.1	15 88 450 C2I/52.4	21.6 130 900 C2I/53.9	31.3 186 900 C2I/53.1	44.7 262 600 C2I/52.1	56.9 340 400 C2I/53.1	77.9 450 000 C2I/51.3	97.5 562 800 C2I/51.3	129 735 400 C2I/50.5	50	560	
	50	0.27 1 500 ICI/49	0.47 2 690 ICI/50.9	0.55 3 150 ICI/50.9	0.96 5 730 ICI/53	1.08 6 420 ICI/53	2.1 11 800 ICI/49.9	4.71 26 500 ICI/50	6.14 34 100 ICI/49.3	9.22 54 450 ICI/52.5	13.6 77 650 ICI/50.8	18.6 110 100 ICI/52.5	–	–	–	–	–	–	50	560	
125 000	200	–	–	–	–	–	1.61 9 750 ICI/192	3.39 21 200 ICI/199	–	6.59 40 800 ICI/196	–	13.5 83 300 ICI/196	–	–	–	–	–	–	200	2000	**10**

For n_1 lower than 560 rpm see page 195.

9 - Bevel helical gear reducer selection tables

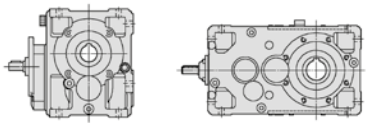

$n_{N2} \cdot L_h$ rpm · h	i_N	50	63	64	80	81	100	125	140	160	180	200	225	250	280	320	321	360	i_N	n_1 rpm	n_{N2}
		Nominal output power P_{N2} [hp] Nominal output torque T_{N2} [lb in] Train of gears / ratio ... / i																			
125 000	160	–	–	–	–	–	–	–	5.8 34 450 C2I/151	8.94 54 200 C2I/154	12.6 78 700 C2I/158	18.3 109 100 C2I/151	25.6 157 300 C2I/156	36.5 224 700 C2I/156	49.8 301 900 C2I/154	64.2 395 100 C2I/156	75.5 464 800 C2I/156	102 646 100 C2I/161	160	1600	10
	160	–	–	–	–	–	1.86 11 250 ICI/154	3.67 23 000 ICI/159	4.19 26 250 ICI/159	7.4 45 800 ICI/157	8.28 52 800 ICI/162	16.3 100 700 ICI/157	–	–	–	–	–	–	160	1600	
	125	–	–	–	–	–	–	–	6.02 37 300 C2I/123	10.2 66 400 C2I/129	12.6 82 700 C2I/130	20.6 132 000 C2I/127	24.7 155 900 C2I/125	42.7 264 800 C2I/123	50.4 318 700 C2I/125	70.5 458 500 C2I/129	88.1 573 100 C2I/129	101 646 900 C2I/127	125	1250	
	125	–	–	–	–	–	2.08 12 900 ICI/123	3.87 24 850 ICI/127	5.16 33 100 ICI/127	8.61 54 550 ICI/126	10.2 66 400 ICI/130	17.4 110 100 ICI/126	–	–	–	–	–	–	125	1250	
	100	–	–	–	–	–	–	–	6.2 38 400 C2I/98.2	10.2 66 400 C2I/103	13.1 86 050 C2I/104	20.6 132 000 C2I/102	26.7 168 900 C2I/100	42.7 264 800 C2I/98.5	54.3 343 300 C2I/100	70.5 458 500 C2I/103	88.1 573 100 C2I/103	110 700 900 C2I/102	100	1000	
	100	–	0.36 2 260 ICI/99.4	0.42 2 650 ICI/99.4	0.7 4 590 ICI/103	0.83 5 390 ICI/103	1.88 11 850 ICI/100	4.16 26 650 ICI/102	5.5 34 750 ICI/100	8.18 54 450 ICI/106	11.7 75 000 ICI/102	16.5 110 100 ICI/106	–	–	–	–	–	–	100	1000	
	90	–	–	–	–	–	–	–	6.27 38 550 C2I/87.8	10.8 68 600 C2I/90.4	11.9 75 000 C2I/90	22.1 136 000 C2I/87.9	27 170 900 C2I/90.3	44 274 300 C2I/89	55 345 300 C2I/89.7	70.4 438 000 C2I/88.8	88 547 400 C2I/88.8	109 694 900 C2I/91.4	90	900	
	80	–	–	–	–	–	–	–	7.06 43 700 C2I/78.6	10.2 66 400 C2I/82.7	13.1 86 050 C2I/83.1	20.6 132 000 C2I/81.4	29.7 187 600 C2I/80.2	42.7 264 800 C2I/78.8	54.3 343 300 C2I/80.3	70.5 458 500 C2I/82.6	88.1 573 100 C2I/82.6	113 720 200 C2I/81.2	80	800	
	80	0.24 1 440 ICI/75.2	0.38 2 410 ICI/79.5	0.47 2 960 ICI/79.5	0.79 5 130 ICI/82.7	0.92 6 000 ICI/82.7	1.85 11 200 ICI/76.7	3.73 23 000 ICI/78.1	4.31 26 500 ICI/78.1	7.62 46 900 ICI/78.1	8.36 53 000 ICI/80.5	16.4 100 700 ICI/78.1	–	–	–	–	–	–	80	800	
	71	–	–	–	–	–	–	–	6.43 40 100 C2I/70.2	10.7 68 600 C2I/72.3	11.7 75 000 C2I/72	21.8 136 000 C2I/70.3	28.1 180 000 C2I/72.2	43.5 274 800 C2I/71.2	53.9 343 000 C2I/71.7	69.6 438 900 C2I/71.1	86.9 548 600 C2I/71.1	104 671 800 C2I/73.1	71	710	
	63	–	–	–	–	–	–	–	7.05 43 700 C2I/62	10.2 66 400 C2I/65.2	13.1 86 050 C2I/65.5	20.6 132 000 C2I/64.2	29.7 187 600 C2I/63.2	42.6 264 900 C2I/62.1	54.2 343 300 C2I/63.3	70.4 458 500 C2I/65.1	88 573 200 C2I/65.1	117 748 900 C2I/64	63	630	
	63	0.24 1 450 ICI/60.1	0.38 2 410 ICI/63.6	0.47 2 960 ICI/63.6	0.78 5 130 ICI/66.2	0.91 6 010 ICI/66.2	2.09 12 800 ICI/61.3	3.96 24 750 ICI/62.5	5.29 33 050 ICI/62.5	8.71 54 450 ICI/62.5	10.3 66 400 ICI/64.4	17.6 109 900 ICI/62.5	–	–	–	–	–	–	63	630	
	56	–	–	–	–	–	–	–	6.42 40 000 C2I/55.4	10.7 68 600 C2I/57	11.7 75 000 C2I/56.8	21.8 136 000 C2I/55.5	28.1 180 000 C2I/56.9	43.5 274 800 C2I/56.1	57.1 363 500 C2I/56.6	69.3 437 000 C2I/56	87 548 600 C2I/56	114 740 300 C2I/57.6	56	560	
112 000	200	–	–	–	–	–	1.45 9 780 ICI/192	3.06 21 300 ICI/199	–	5.95 40 950 ICI/196	–	12.2 83 600 ICI/196	–	–	–	–	–	–	200	1800	9
	160	–	–	–	–	–	–	–	5.18 35 150 C2I/151	7.98 55 300 C2I/154	11.3 80 300 C2I/158	16.3 111 300 C2I/151	22.8 160 500 C2I/156	32.6 229 300 C2I/156	44.5 308 100 C2I/154	57.3 403 200 C2I/156	67.4 474 300 C2I/156	89.2 646 100 C2I/161	160	1400	
	160	–	–	–	–	–	1.63 11 300 ICI/154	3.23 23 100 ICI/159	3.7 26 500 ICI/159	6.58 46 550 ICI/157	7.27 53 000 ICI/162	14.3 101 100 ICI/157	–	–	–	–	–	–	160	1400	
	125	–	–	–	–	–	–	–	5.42 37 450 C2I/123	9.13 66 400 C2I/129	11.4 83 000 C2I/130	18.8 134 200 C2I/127	22.2 156 400 C2I/125	38.9 269 300 C2I/123	45.3 319 800 C2I/125	64.2 466 100 C2I/129	79.2 575 300 C2I/129	90.9 649 200 C2I/127	125	1120	
	125	–	–	–	–	–	1.87 12 950 ICI/123	3.53 25 250 ICI/127	4.64 33 200 ICI/127	7.84 55 500 ICI/126	9.11 66 400 ICI/130	15.8 112 000 ICI/126	–	–	–	–	–	–	125	1120	

For n_1 lower than 560 rpm see page 195.

9 - Bevel helical gear reducer selection tables

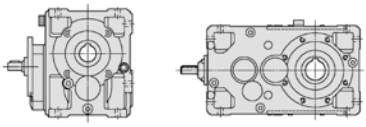

$n_{N2} \cdot L_h$ rpm · h	i_N	50	63	64	80	81	100	125	140	160	180	200	225	250	280	320	321	360	i_N	n_1 rpm	n_{N2}
		Nominal output power P_{N2} [hp] Nominal output torque T_{N2} [lb in] Train of gears / ratio … / i																			
112 000	100	–	–	–	–	–	–	–	5.6 38 500 C2I/98.2	9.17 66 400 C2I/103	11.9 86 300 C2I/104	18.8 134 100 C2I/102	24.1 169 500 C2I/100	39 269 100 C2I/98.5	49.1 345 100 C2I/100	64.4 465 800 C2I/103	79.6 575 300 C2I/103	98.9 703 200 C2I/102	100	900	9
	100	–	0.33 2 270 ICI/99.4	0.38 2 660 ICI/99.4	0.64 4 600 ICI/103	0.75 5 410 ICI/103	1.69 11 900 ICI/100	3.75 26 750 ICI/102	5.03 35 300 ICI/100	7.36 54 450 ICI/106	10.8 77 500 ICI/102	14.9 110 100 ICI/106	–	–	–	–	–	–	100	900	
	90	–	–	–	–	–	–	–	5.6 38 700 C2I/87.8	9.63 68 600 C2I/90.4	10.6 75 000 C2I/90	19.6 136 000 C2I/87.9	24.1 171 600 C2I/90.3	39.8 278 800 C2I/89	49.1 346 600 C2I/89.7	63.7 445 800 C2I/88.8	79.6 557 300 C2I/88.8	98.8 711 500 C2I/91.4	90	800	
	80	–	–	–	–	–	–	–	6.26 43 700 C2I/78.6	9.05 66 400 C2I/82.7	11.7 86 350 C2I/83.1	18.6 134 400 C2I/81.4	26.4 187 600 C2I/80.2	38.6 269 700 C2I/78.8	49 349 500 C2I/80.3	63.7 466 800 C2I/82.6	78.5 575 300 C2I/82.6	104 746 400 C2I/81.2	80	710	
	80	0.22 1 440 ICI/75.2	0.34 2 410 ICI/79.5	0.42 2 960 ICI/79.5	0.71 5 190 ICI/82.7	0.83 6 110 ICI/82.7	1.65 11 200 ICI/76.7	3.33 23 050 ICI/78.1	3.82 26 500 ICI/78.1	6.76 46 900 ICI/78.1	7.42 53 000 ICI/80.5	14.6 101 100 ICI/78.1	–	–	–	–	–	–	80	710	
	71	–	–	–	–	–	–	–	5.73 40 250 C2I/70.2	9.48 68 600 C2I/72.3	10.4 75 000 C2I/72	19.3 136 000 C2I/70.3	24.9 180 000 C2I/72.2	39.1 278 800 C2I/71.2	49.5 355 500 C2I/71.7	62.8 446 900 C2I/71.1	78.6 558 600 C2I/71.1	95.2 696 300 C2I/73.1	71	630	
	63	–	–	–	–	–	–	–	6.27 43 700 C2I/62	9.05 66 400 C2I/65.2	11.7 86 350 C2I/65.5	18.6 134 400 C2I/64.2	26.4 187 600 C2I/63.2	38.6 269 600 C2I/62.1	49.1 349 500 C2I/63.3	63.7 466 800 C2I/65.1	78.5 575 300 C2I/65.1	104 750 000 C2I/64	63	560	
	63	0.22 1 470 ICI/60.1	0.34 2 410 ICI/63.6	0.41 2 960 ICI/63.6	0.7 5 200 ICI/66.2	0.82 6 120 ICI/66.2	1.85 12 800 ICI/61.3	3.58 25 200 ICI/62.5	4.72 33 200 ICI/62.5	7.88 55 450 ICI/62.5	9.16 66 400 ICI/64.4	15.9 111 900 ICI/62.5	–	–	–	–	–	–	63	560	
100 000	200	–	–	–	–	–	1.3 9 820 ICI/192	2.73 21 350 ICI/199	–	5.31 41 100 ICI/196	–	10.8 83 900 ICI/196	–	–	–	–	–	–	200	1600	8
	160	–	–	–	–	–	–	–	4.71 35 750 C2I/151	7.25 56 250 C2I/154	10.2 81 700 C2I/158	14.8 113 300 C2I/151	20.8 163 300 C2I/156	29.6 233 300 C2I/156	40.4 313 400 C2I/154	51.9 408 900 C2I/156	61.2 482 400 C2I/156	79.6 646 100 C2I/161	160	1250	
	160	–	–	–	–	–	1.46 11 350 ICI/154	2.89 23 150 ICI/159	3.31 26 500 ICI/159	5.87 46 550 ICI/157	6.49 53 000 ICI/162	12.8 101 500 ICI/157	–	–	–	–	–	–	160	1250	
	125	–	–	–	–	–	–	–	4.85 37 550 C2I/123	8.15 66 400 C2I/129	10.2 83 300 C2I/130	17 136 000 C2I/127	19.9 157 000 C2I/125	35 271 700 C2I/123	40.6 321 000 C2I/125	57.7 469 100 C2I/129	70.7 575 300 C2I/129	81.4 651 500 C2I/127	125	1000	
	125	–	–	–	–	–	1.67 13 000 ICI/123	3.21 25 700 ICI/127	4.16 33 300 ICI/127	7.12 56 450 ICI/126	8.13 66 400 ICI/130	14.1 112 000 ICI/126	–	–	–	–	–	–	125	1000	
	100	–	–	–	–	–	–	–	5 38 650 C2I/98.2	8.15 66 400 C2I/103	10.6 86 650 C2I/104	17 136 000 C2I/102	21.5 170 100 C2I/100	35 271 700 C2I/98.5	43.8 346 400 C2I/100	57.7 469 100 C2I/103	70.7 575 300 C2I/103	88.2 705 900 C2I/102	100	800	
	100	–	0.29 2 280 ICI/99.4	0.34 2 670 ICI/99.4	0.57 4 620 ICI/103	0.67 5 430 ICI/103	1.51 11 950 ICI/100	3.35 26 850 ICI/102	4.55 35 950 ICI/100	6.54 54 450 ICI/106	9.63 77 500 ICI/102	13.2 110 100 ICI/106	–	–	–	–	–	–	100	800	
	90	–	–	–	–	–	–	–	4.98 38 850 C2I/87.8	8.55 68 600 C2I/90.4	9.39 75 000 C2I/90	17.4 136 000 C2I/87.9	21.5 172 200 C2I/90.3	35.3 278 800 C2I/89	43.7 347 900 C2I/89.7	57.6 453 900 C2I/88.8	71.9 567 400 C2I/88.8	88 714 200 C2I/91.4	90	710	
	80	–	–	–	–	–	–	–	5.56 43 700 C2I/78.6	8.03 66 400 C2I/82.7	10.4 86 700 C2I/83.1	16.7 136 000 C2I/81.4	23.4 187 600 C2I/80.2	34.5 271 700 C2I/78.8	44.3 355 900 C2I/80.3	56.8 469 100 C2I/82.6	69.6 575 300 C2I/82.6	92.3 750 000 C2I/81.2	80	630	
	80	0.19 1 450 ICI/75.2	0.3 2 410 ICI/79.5	0.38 2 990 ICI/79.5	0.64 5 280 ICI/82.7	0.75 6 220 ICI/82.7	1.46 11 200 ICI/76.7	2.96 23 150 ICI/78.1	3.39 26 500 ICI/78.1	6 46 900 ICI/78.1	6.58 53 000 ICI/80.5	13 101 400 ICI/78.1	–	–	–	–	–	–	80	630	

For n_1 lower than 560 rpm see page 195.

9 - Bevel helical gear reducer selection tables

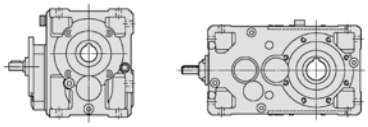

$n_{N2} \cdot L_h$ rpm · h	i_N	50	63	64	80	81	100	125	140	160	180	200	225	250	280	320	321	360	i_N	n_1 rpm	n_{N2}
		Nominal output power P_{N2} [hp] Nominal output torque T_{N2} [lb in] Train of gears / ratio … / i																			
100 000	71	–	–	–	–	–	–	–	5.11 40 400 C2I/70.2	8.43 68 600 C2I/72.3	9.25 75 000 C2I/72	17.2 136 000 C2I/70.3	22.1 180 000 C2I/72.2	34.8 278 800 C2I/71.2	45.2 365 000 C2I/71.7	56.9 454 900 C2I/71.1	71.1 568 700 C2I/71.1	87.7 721 400 C2I/73.1	71	560	8
90 000	200	–	–	–	–	–	1.14 9 860 ICI/192	2.4 21 450 ICI/199	–	4.67 41 250 ICI/196	–	9.53 84 250 ICI/196	–	–	–	–	–	–	200	1400	7.1
	160	–	–	–	–	–	–	–	4.29 36 350 C2I/151	6.61 57 200 C2I/154	9.18 81 850 C2I/158	13.5 115 200 C2I/151	18.6 163 700 C2I/156	26.7 234 500 C2I/156	36.8 318 700 C2I/154	46.5 408 900 C2I/156	54.9 482 400 C2I/156	71.3 646 100 C2I/161	160	1120	
	160	–	–	–	–	–	1.31 11 350 ICI/154	2.6 23 250 ICI/159	2.96 26 500 ICI/159	5.26 46 550 ICI/157	5.82 53 000 ICI/162	11.5 101 800 ICI/157	–	–	–	–	–	–	160	1120	
	125	–	–	–	–	–	–	–	4.38 37 700 C2I/123	7.34 66 400 C2I/129	9.19 83 550 C2I/130	15.3 136 000 C2I/127	18 157 500 C2I/125	31.5 271 700 C2I/123	36.7 322 000 C2I/125	51.9 469 100 C2I/129	63.7 575 300 C2I/129	73.5 653 600 C2I/127	125	900	
	125	–	–	–	–	–	1.51 13 050 ICI/123	2.93 26 100 ICI/127	3.75 33 450 ICI/127	6.51 57 350 ICI/126	7.32 66 400 ICI/130	12.7 112 000 ICI/126	–	–	–	–	–	–	125	900	
	100	–	–	–	–	–	–	–	4.44 38 700 C2I/98.2	7.24 66 400 C2I/103	9.43 86 950 C2I/104	15.1 136 000 C2I/102	19.2 170 700 C2I/100	31.1 271 700 C2I/98.5	39 347 700 C2I/100	51.2 469 100 C2I/103	62.8 575 300 C2I/103	78.6 708 500 C2I/102	100	710	
	100	–	0.26 2 280 ICI/99.4	0.3 2 680 ICI/99.4	0.51 4 640 ICI/103	0.59 5 450 ICI/103	1.35 11 950 ICI/100	2.98 26 950 ICI/102	4.11 36 600 ICI/100	5.81 54 450 ICI/106	8.55 77 500 ICI/102	11.7 110 100 ICI/106	–	–	–	–	–	–	100	710	
	90	–	–	–	–	–	–	–	4.44 39 000 C2I/87.8	7.59 68 600 C2I/90.4	8.33 75 000 C2I/90	15.5 136 000 C2I/87.9	19.1 172 900 C2I/90.3	31.3 278 800 C2I/89	38.9 349 200 C2I/89.7	52 462 200 C2I/88.8	65 577 800 C2I/88.8	78.4 716 900 C2I/91.4	90	630	
	80	–	–	–	–	–	–	–	4.94 43 700 C2I/78.6	7.13 66 400 C2I/82.7	9.3 87 000 C2I/83.1	14.8 136 000 C2I/81.4	20.8 187 600 C2I/80.2	30.6 271 700 C2I/78.8	40.1 362 300 C2I/80.3	50.5 469 100 C2I/82.6	61.9 575 300 C2I/82.6	82 750 000 C2I/81.2	80	560	
	80	0.17 1 450 ICI/75.2	0.27 2 430 ICI/79.5	0.34 3 040 ICI/79.5	0.58 5 380 ICI/82.7	0.67 6 280 ICI/82.7	1.3 11 200 ICI/76.7	2.64 23 250 ICI/78.1	3.01 26 500 ICI/78.1	5.33 46 900 ICI/78.1	5.85 53 000 ICI/80.5	11.6 101 800 ICI/78.1	–	–	–	–	–	–	80	560	
80 000	200	–	–	–	–	–	1.02 9 900 ICI/192	2.15 21 550 ICI/199	–	4.18 41 400 ICI/196	–	8.54 84 550 ICI/196	–	–	–	–	–	–	200	1250	6.3
	160	–	–	–	–	–	–	–	3.89 36 950 C2I/151	5.93 57 550 C2I/154	8.2 81 850 C2I/158	12.2 116 800 C2I/151	16.6 163 700 C2I/156	23.8 234 500 C2I/156	33.3 323 100 C2I/154	41.5 408 900 C2I/156	49 482 400 C2I/156	63.7 646 100 C2I/161	160	1000	
	160	–	–	–	–	–	1.18 11 400 ICI/154	2.33 23 350 ICI/159	2.65 26 500 ICI/159	4.7 46 550 ICI/157	5.19 53 000 ICI/162	10.3 102 200 ICI/157	–	–	–	–	–	–	160	1000	
	125	–	–	–	–	–	–	–	3.91 37 850 C2I/123	6.52 66 400 C2I/129	8.2 83 850 C2I/130	13.6 136 000 C2I/127	16 158 100 C2I/125	28 271 700 C2I/123	32.7 323 200 C2I/125	46.1 469 100 C2I/129	56.6 575 300 C2I/129	65.6 656 100 C2I/127	125	800	
	125	–	–	–	–	–	1.35 13 100 ICI/123	2.65 26 500 ICI/127	3.35 33 550 ICI/127	5.81 57 550 ICI/126	6.51 66 500 ICI/130	11.3 112 000 ICI/126	–	–	–	–	–	–	125	800	
	100	–	–	–	–	–	–	–	3.94 38 700 C2I/98.2	6.42 66 400 C2I/103	8.4 87 300 C2I/104	13.4 136 000 C2I/102	17.1 171 400 C2I/100	27.6 271 700 C2I/98.5	34.8 349 000 C2I/100	45.4 469 100 C2I/103	55.7 575 300 C2I/103	69.9 710 000 C2I/102	100	630	
	100	–	0.23 2 290 ICI/99.4	0.27 2 690 ICI/99.4	0.45 4 660 ICI/103	0.53 5 450 ICI/103	1.2 12 000 ICI/100	2.66 27 050 ICI/102	3.72 37 250 ICI/100	5.16 54 500 ICI/106	7.59 77 500 ICI/102	10.4 110 100 ICI/106	–	–	–	–	–	–	100	630	

For n_1 lower than 560 rpm see page 195.

9 - Bevel helical gear reducer selection tables

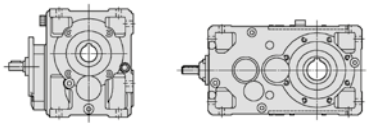

$n_{N2} \cdot L_h$ rpm · h	i_N	50	63	64	80	81	100	125	140	160	180	200	225	250	280	320	321	360	i_N	n_1 rpm	n_{N2}
		Nominal output power P_{N2} [hp] Nominal output torque T_{N2} [lb in] Train of gears / ratio … / i																			
80 000	90	–	–	–	–	–	–	–	3.96 39 150 C2I/87.8	6.74 68 600 C2I/90.4	7.4 75 000 C2I/90	13.7 136 000 C2I/87.9	17.1 173 500 C2I/90.3	27.8 278 800 C2I/89	34.7 350 500 C2I/89.7	47.1 470 500 C2I/88.8	58.8 588 200 C2I/88.8	70 719 500 C2I/91.4	90	560	**6.3**
71 000	200	–	–	–	–	–	0.92 9 930 ICI/192	1.93 21 600 ICI/199	–	3.76 41 550 ICI/196	–	7.68 84 850 ICI/196	–	–	–	–	–	–	200	1120	**5.6**
	160	–	–	–	–	–	–	–	3.56 37 550 C2I/151	5.34 57 550 C2I/154	7.38 81 850 C2I/158	11 116 800 C2I/151	15 163 700 C2I/156	21.4 234 500 C2I/156	30 323 100 C2I/154	37.4 408 900 C2I/156	44.1 482 400 C2I/156	57.3 646 100 C2I/161	160	900	
	160	–	–	–	–	–	1.06 11 450 ICI/154	2.1 23 400 ICI/159	2.38 26 500 ICI/159	4.23 46 550 ICI/157	4.67 53 000 ICI/162	9.32 102 500 ICI/157	–	–	–	–	–	–	160	900	
	125	–	–	–	–	–	–	–	3.48 37 950 C2I/123	5.79 66 400 C2I/129	7.31 84 200 C2I/130	12 136 000 C2I/127	14.3 158 700 C2I/125	24.9 271 700 C2I/123	29.1 324 400 C2I/125	40.9 469 100 C2I/129	50.2 575 300 C2I/129	58.4 658 500 C2I/127	125	710	
	125	–	–	–	–	–	1.2 13 150 ICI/123	2.35 26 500 ICI/127	2.98 33 700 ICI/127	5.15 57 550 ICI/126	5.8 66 750 ICI/130	10 112 000 ICI/126	–	–	–	–	–	–	125	710	
	100	–	–	–	–	–	–	–	3.5 38 700 C2I/98.2	5.71 66 400 C2I/103	7.49 87 500 C2I/104	11.9 136 000 C2I/102	15.2 172 000 C2I/100	24.5 271 700 C2I/98.5	31 350 300 C2I/100	40.4 469 100 C2I/103	49.5 575 300 C2I/103	62.1 710 000 C2I/102	100	560	
	100	–	0.21 2 300 ICI/99.4	0.24 2 700 ICI/99.4	0.4 4 670 ICI/103	0.47 5 450 ICI/103	1.07 12 050 ICI/100	2.37 27 150 ICI/102	3.36 37 950 ICI/100	4.59 54 500 ICI/106	6.74 77 500 ICI/102	9.26 110 100 ICI/106	–	–	–	–	–	–	100	560	
63 000	200	–	–	–	–	–	0.82 9 970 ICI/192	1.73 21 700 ICI/199	–	3.37 41 700 ICI/196	–	6.88 85 150 ICI/196	–	–	–	–	–	–	200	1000	**5**
	160	–	–	–	–	–	–	–	3.22 38 250 C2I/151	4.75 57 550 C2I/154	6.56 81 850 C2I/158	9.79 116 800 C2I/151	13.3 163 700 C2I/156	19.1 234 500 C2I/156	26.7 323 100 C2I/154	33.2 408 900 C2I/156	39.2 482 400 C2I/156	51 646 100 C2I/161	160	800	
	160	–	–	–	–	–	0.95 11 500 ICI/154	1.88 23 500 ICI/159	2.12 26 500 ICI/159	3.76 46 550 ICI/157	4.16 53 000 ICI/162	8.31 102 900 ICI/157	–	–	–	–	–	–	160	800	
	125	–	–	–	–	–	–	–	3.1 38 100 C2I/123	5.14 66 400 C2I/129	6.51 84 500 C2I/130	10.7 136 000 C2I/127	12.7 159 300 C2I/125	22.1 271 700 C2I/123	25.9 325 700 C2I/125	36.3 469 100 C2I/129	44.6 575 300 C2I/129	52.1 661 000 C2I/127	125	630	
	125	–	–	–	–	–	1.07 13 200 ICI/123	2.08 26 500 ICI/127	2.66 33 800 ICI/127	4.57 57 550 ICI/126	5.17 67 000 ICI/130	8.9 112 000 ICI/126	–	–	–	–	–	–	125	630	
56 000	200	–	–	–	–	–	0.74 10 000 ICI/192	1.56 21 750 ICI/199	–	3.04 41 850 ICI/196	–	6.21 85 450 ICI/196	–	–	–	–	–	–	200	900	**4.5**
	160	–	–	–	–	–	–	–	2.89 38 700 C2I/151	4.21 57 550 C2I/154	5.82 81 850 C2I/158	8.69 116 800 C2I/151	11.8 163 700 C2I/156	16.9 234 500 C2I/156	23.7 323 100 C2I/154	29.5 408 900 C2I/156	34.8 482 400 C2I/156	45.2 646 100 C2I/161	160	710	
	160	–	–	–	–	–	0.84 11 550 ICI/154	1.67 23 600 ICI/159	1.88 26 500 ICI/159	3.34 46 550 ICI/157	3.69 53 000 ICI/162	7.38 103 000 ICI/157	–	–	–	–	–	–	160	710	
	125	–	–	–	–	–	–	–	2.77 38 250 C2I/123	4.57 66 400 C2I/129	5.81 84 800 C2I/130	9.5 136 000 C2I/127	11.3 159 900 C2I/125	19.6 271 700 C2I/123	23.2 326 900 C2I/125	32.3 469 100 C2I/129	39.6 575 300 C2I/129	46.4 663 500 C2I/127	125	560	
	125	–	–	–	–	–	0.95 13 200 ICI/123	1.85 26 500 ICI/127	2.37 33 950 ICI/127	4.07 57 550 ICI/126	4.6 67 000 ICI/130	7.91 112 000 ICI/126	–	–	–	–	–	–	125	560	

For n_1 lower than 560 rpm see page 195.

9 - Bevel helical gear reducer selection tables

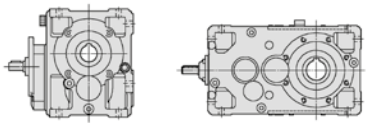

$n_{N2} \cdot L_h$ rpm · h	i_N	50	63	64	80	81	100	125	140	160	180	200	225	250	280	320	321	360	i_N	n_1 rpm	n_{N2}
		Nominal output power P_{N2} [hp]																			
		Nominal output torque T_{N2} [lb in]																			
		Train of gears / ratio ... / i																			
50 000	200	–	–	–	–	–	0.66 10 050 ICI/192	1.4 21 850 ICI/199	–	2.71 42 000 ICI/196	–	5.54 85 750 ICI/196	–	–	–	–	–	–	200	800	**4**
	160	–	–	–	–	–	–	–	2.57 38 700 C2I/151	3.74 57 550 C2I/154	5.16 81 850 C2I/158	7.71 116 800 C2I/151	10.5 163 700 C2I/156	15 234 500 C2I/156	21 323 100 C2I/154	26.2 408 900 C2I/156	30.9 482 400 C2I/156	40.1 646 100 C2I/161	160	630	
	160	–	–	–	–	–	0.75 11 600 ICI/154	1.49 23 650 ICI/159	1.67 26 500 ICI/159	2.96 46 550 ICI/157	3.27 53 000 ICI/162	6.55 103 000 ICI/157	–	–	–	–	–	–	160	630	
45 000	200	–	–	–	–	–	0.59 10 050 ICI/192	1.24 21 900 ICI/199	–	2.42 42 150 ICI/196	–	4.94 86 100 ICI/196	–	–	–	–	–	–	200	710	**3.55**
	160	–	–	–	–	–	–	–	2.28 38 700 C2I/151	3.32 57 550 C2I/154	4.59 81 850 C2I/158	6.85 116 800 C2I/151	9.32 163 700 C2I/156	13.3 234 500 C2I/156	18.7 323 100 C2I/154	23.3 408 900 C2I/156	27.4 482 400 C2I/156	35.7 646 100 C2I/161	160	560	
	160	–	–	–	–	–	0.67 11 600 ICI/154	1.33 23 750 ICI/159	1.48 26 500 ICI/159	2.63 46 550 ICI/157	2.91 53 000 ICI/162	5.82 103 000 ICI/157	–	–	–	–	–	–	160	560	
40 000	200	–	–	–	–	–	0.53 10 100 ICI/192	1.11 22 000 ICI/199	–	2.15 42 300 ICI/196	–	4.4 86 400 ICI/196	–	–	–	–	–	–	200	630	**3.15**
35 500	200	–	–	–	–	–	0.47 10 150 ICI/192	0.99 22 100 ICI/199	–	1.92 42 500 ICI/196	–	3.92 86 750 ICI/196	–	–	–	–	–	–	200	560	**2.8**

For n_1 lower than 560 rpm see page 195.

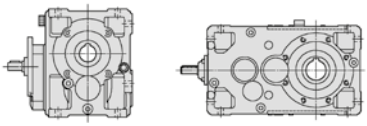

Summary of transmission ratios *i*, torques T_{N2} [lb in] valid for $n_1 \leqslant 90$ rpm

Train of gears	i_N	Transmission ratio *i* / Nominal output torque T_{N2} [lb in]																
		50	63	64	80	81	100	125	140	160	180	200	225	250	280	320	321	360
CI	4	–	–	–	–	–	–	–	–	–	–	4.1 56 000	–	4 1) 109 000	–	3.9 190 000	3.9 236 000	–
	5	–	–	–	–	–	–	5.06 20 600	–	4.89 33 500	–	5.11 77 500	–	5.06 165 000	–	4.89 280 000	4.89 345 000	–
	6.3	6.53 1 550	6.57 2 800	6.57 3 450	6.27 5 800	6.27 6 500	6.53 11 800	6.57 26 500	–	6.27 50 000	–	6.53 100 000	–	6.57 212 000	–	6.27 355 000	6.27 437 000	–
	8	7.85 1 750	8 1) 2 900	8 1) 3 550	8.33 6 150	8.33 7 100	7.85 14 500	8 30 000	8.15 36 500	8.27 65 000	8.31 73 000	8.27 128 000	8.14 140 000	8.21 224 000	8.15 300 000	7.83 355 000	7.83 462 000	8 1) 560 000
	9	–	–	–	–	–	–	–	9 1) 40 000	9.04 53 000	9.33 82 500	8.93 112 000	9.33 160 000	9.04 243 000	9 1) 325 000	8.75 1) 400 000	8.75 1) 515 000	9.2 1) 650 000
	10	10.3 1 750	10 1) 3 000	10 1) 3 650	10.4 6 300	10.4 7 500	9.81 15 000	10 1) 26 500	10.2 30 700	10.3 61 500	10.4 69 000	10.3 118 000	10.2 132 000	10 1) 265 000	10.2 315 000	10.2 425 000	10.2 515 000	10 1) 600 000
	11.2	–	–	–	–	–	–	–	11.3 34 500	11.4 58 000	11.7 73 000	11.3 103 000	11.7 145 000	11.4 218 000	11.3 1) 307 000	11 365 000	11 437 000	11.5 1) 690 000
	12.5	12.4 1 750	12.6 3 070	12.6 3 870	13.1 6 500	13.1 7 750	12.4 14 500	12.6 30 700	12.9 33 500	13 67 000	13.1 75 000	13 112 000	12.8 132 000	12.6 224 000	12.9 250 000	12.8 345 000	12.8 425 000	12.6 500 000
	14	–	–	–	–	–	–	–	14.2 37 500	14.2 63 000	14.7 85 000	14.2 128 000	14.7 150 000	14.1 250 000	14.2 280 000	14.2 400 000	14.2 475 000	14.5 580 000
	16	15.2 1 550	15.8 2 500	15.8 3 150	16.4 1) 5 600	16.4 1) 6 500	15.2 13 200	15.8 26 500	15.8 37 500	15.5 58 000	16 82 500	15.5 118 000	16 165 000	16 236 000	15.8 300 000	16.3 345 000	16.3 437 000	16 630 000
	18	–	–	–	–	–	–	–	18 1) 30 700	18 1) 53 000	18.7 63 000	18 1) 103 000	18.7 125 000	17.9 218 000	18 1) 243 000	18 1) 355 000	18 1) 437 000	18.4 1) 487 000
	20	19.3 1 550	20 1) 2 570	20 1) 3 250	20.8 1) 5 800	20.8 1) 6 700	19.3 13 200	20 1) 26 500	20 1) 31 500	19.7 58 000	20.3 67 000	19.7 112 000	20.3 132 000	20.3 236 000	20 1) 265 000	19.7 400 000	19.7 462 000	20.3 545 000
	25	24.1 1 500	25 1) 2 570	25 1) 3 150	26 1) 5 800	26 1) 6 500	24.1 10 300	25 1) 23 600	–	24.6 46 200	–	24.6 92 500	–	25.4 195 000	–	–	–	–
	31.5	–	31.3 2 240	31.3 2 430	32.5 1) 4 500	32.5 1) 5 600	30.1 10 000	31.3 19 500	–	30.8 37 500	–	30.8 77 500	–	31.7 160 000	–	–	–	–
ICI	31.5	32.1 1 750	33 3 000	33 3 450	31.4 6 500	31.4 7 300	32.8 13 600	32.4 28 000	–	31.4 60 000	–	32.7 122 000	–	–	–	–	–	–
	40	38.6 1 750	40.1 3 450	40.1 4 250	41.8 7 300	41.8 8 500	39.4 15 000	39.4 30 700	40.2 35 500	41.4 67 000	41.6 80 000	41.4 136 000	–	–	–	–	–	–
	50	49 1 750	50.9 3 070	50.9 3 650	53 6 700	53 7 500	49.9 13 600	50 1) 30 700	49.3 38 700	52.5 63 000	50.8 82 500	52.5 125 000	–	–	–	–	–	–
	63	60.1 1 550	63.6 3 000	63.6 3 650	66.2 6 300	66.2 7 300	61.3 13 200	62.5 1) 26 500	62.5 1) 38 700	62.5 58 000	64.4 77 500	62.5 118 000	–	–	–	–	–	–
	80	75.2 1 550	79.5 3 000	79.5 3 650	82.7 6 300	82.7 7 300	76.7 13 200	78.1 23 600	78.1 27 200	78.1 47 500	80.5 54 500	78.1 118 000	–	–	–	–	–	–
	100	–	99.4 2 500	99.4 3 070	103 5 450	103 6 000	100 14 000	102 30 700	100 38 700	106 67 000	102 82 500	106 132 000	–	–	–	–	–	–
	125	–	–	–	–	–	123 13 200	127 26 500	127 38 700	126 58 000	130 82 500	126 118 000	–	–	–	–	–	–
	160	–	–	–	–	–	154 13 200	159 26 500	159 32 500	157 58 000	162 65 000	157 118 000	–	–	–	–	–	–
	200	–	–	–	–	–	192 10 300	199 24 300	–	196 47 500	–	196 95 000	–	–	–	–	–	–
C2I	20								20.4 41 200	20.6 69 000	21.4 95 000	20.5 136 000	19.9 175 000	21.5 280 000	20.8 355 000	20.6 487 000	20.6 615 000	21.4 750 000
	22.4	–	–	–	–	–	–	–	23.8 1) 45 000	23.8 69 000	23.7 97 500	22.4 136 000	23 195 000	23.6 280 000	23.8 1) 387 000	23 1) 487 000	23 1) 615 000	23.7 775 000
	25	–	–	–	–	–	–	–	24.5 43 700	25.1 69 000	26 1) 90 000	27 136 000	26.3 195 000	27.2 280 000	26.4 387 000	25.1 487 000	25.1 615 000	26 1) 775 000
	28	–	–	–	–	–	–	–	28.6 45 000	28.9 69 000	28.8 1) 97 500	29.5 136 000	30.3 195 000	29.9 280 000	30.1 387 000	28 1) 487 000	28 1) 615 000	28.8 1) 775 000
	31.5	–	–	–	–	–	–	–	32 43 700	33.1 67 000	33.2 95 000	34.2 136 000	33.7 190 000	33.1 272 000	33.7 375 000	31.3 487 000	31.3 615 000	32.5 1) 775 000
	35.5	–	–	–	–	–	–	–	37.5 45 000	37.5 69 000	37.3 95 000	35.3 136 000	36.2 195 000	37.2 280 000	37.5 375 000	36.3 487 000	36.3 615 000	37.3 690 000
	40	–	–	–	–	–	–	–	38.7 45 000	39.5 69 000	41 1) 97 500	42.6 136 000	41.4 195 000	42.8 280 000	41.6 387 000	39.5 487 000	39.5 615 000	41 1) 750 000
	45	–	–	–	–	–	–	–	45.1 45 000	45.6 69 000	45.4 97 500	46.6 136 000	47.8 195 000	47.1 280 000	47.5 387 000	44.2 487 000	44.2 615 000	45.4 775 000
	50	–	–	–	–	–	–	–	50.4 43 700	52.1 67 000	52.4 95 000	53.9 136 000	53.1 190 000	52.1 272 000	53.1 375 000	51.3 475 000	51.3 580 000	50.5 750 000
	56	–	–	–	–	–	–	–	55.4 45 000	57 69 000	56.8 87 500	55.5 136 000	56.9 195 000	56.1 280 000	56.6 387 000	56 487 000	56 615 000	57.6 775 000
	63	–	–	–	–	–	–	–	62 43 700	65.2 67 000	65.5 95 000	64.2 136 000	63.2 190 000	62.1 272 000	63.3 375 000	65.1 475 000	65.1 580 000	64 750 000
	71	–	–	–	–	–	–	–	70.2 45 000	72.3 69 000	72 1) 90 000	70.3 136 000	72.2 195 000	71.2 280 000	71.7 387 000	71.1 487 000	71.1 615 000	73.1 775 000
	80	–	–	–	–	–	–	–	78.6 43 700	82.7 67 000	83.1 95 000	81.4 136 000	80.2 190 000	78.8 272 000	80.3 375 000	82.6 475 000	82.6 580 000	81.2 750 000
	90	–	–	–	–	–	–	–	87.8 41 200	90.4 69 000	90 1) 85 000	87.9 136 000	90.3 180 000	89 280 000	89.7 375 000	88.8 487 000	88.8 615 000	91.4 750 000
	100	–	–	–	–	–	–	–	98.2 41 200	103 67 000	104 95 000	102 136 000	100 180 000	98.5 272 000	100 375 000	103 475 000	103 580 000	102 750 000
	125	–	–	–	–	–	–	–	123 40 000	129 67 000	130 90 000	127 136 000	125 170 000	123 272 000	125 345 000	129 475 000	129 580 000	127 710 000
	160	–	–	–	–	–	–	–	151 38 700	154 58 000	158 82 500	151 118 000	156 165 000	156 236 000	154 325 000	156 412 000	156 487 000	161 650 000

1) **Finite** transmission ratio.

This page is intentionally left blank.

10 – Dimensions, designs, mounting positions of bevel helical gear reducers

10.1 - Gear reducers R CI 198

Dimensions 198
Designs (direction of rotation) 199
Mounting positions 200
Lubrication details 201

10.2 - Gear reducers R ICI 202

Dimensions 202
Designs (direction of rotation) 202
Mounting positions 203
Lubrication details 204

10.3 - Gear reducers R C2I 206

Dimensions 206
Designs (direction of rotation) 207
Mounting positions 207
Lubrication details 208

The dimensions are expressed in mm

10.1 - Gear reducers R CI

Dimensions

R CI 50 ... 100

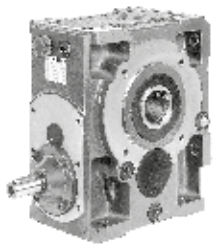

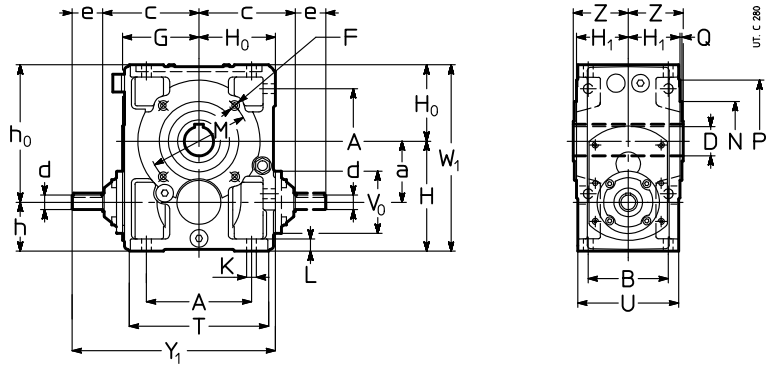

Size	a	A	B	c i_N ≤ 8	c i_N ≥ 10	D Ø H7	d Ø	e	Y_1	d Ø	e	Y_1	d Ø	e	Y_1	F 1)	H h11	H_0 h11 G	H_1 h12	h h11	h_0 h11	K Ø	L	M Ø	N Ø h6	P Ø	Q	T	U	V_0 Ø	W_1	Z	lb
							i_N ≤ 8			i_N = 10 ... 16			i_N ≥ 20																				
50	50	86	75	100	94	24	16	30	197	16	30	191	14	30	191	M6	100	67	49	50	117	9.5	12	85	70	105	2.5	120	95	78	167	53	20
63	63	102	90	119	108	30	19	40	239	16	30	218	14	30	218	M8	125	80	58.5	62	143	11.5	14	100	80	120	3	143	114	78	205	63	31
64	63	102	90	119	108	32	19	40	239	16	30	218	14	30	218	M8	125	80	58.5	62	143	11.5	14	100	80	120	3	143	114	78	205	63	31
80	80	132	106	142	131	38	24	50	292	19	40	271	16	30	261	M10	150	100	69.5	70	180	14	17	130	110	160	3.5	180	135	86	250	75	55
81	80	132	106	142	131	40	24	50	292	19	40	271	16	30	261	M10	150	100	69.5	70	180	14	17	130	110	160	3.5	180	135	86	250	75	55
100	100	172	131	168	157	48	28	60	353	24	50	332	19	40	322	M12	180	125	84.5	80	225	16	20	165	130	200	3.5	228	165	104	305	90	99

R CI 125 ... 360

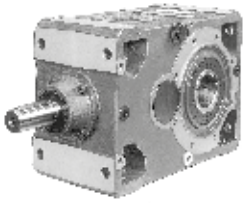

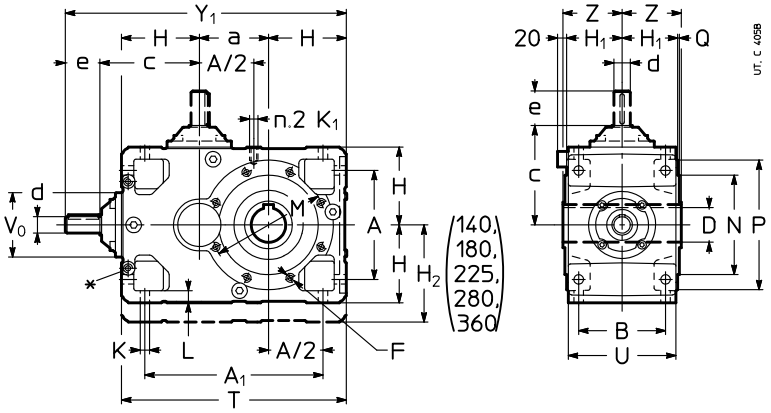

Size	a	A	A_1	B	c i_N ≤ 8	c i_N ≥ 9	D Ø H7	d Ø	e	Y_1	d Ø	e	Y_1	d Ø	e	Y_1	F 1)	H h11	H_1 h12	H_2 h11	K Ø	K_1 2)	L	M Ø	N Ø h6	P Ø	Q	T	U	V_0 Ø	Z	lb
															i_N ≥ 18																		
					≤ 8	≥ 9			i_N ≤ 8			i_N = 9 ... 16																				
125	125	212	337	162	202	188	60	38	80	557	28	60	523	24	50	513	3)	150	103.5	–	18	M12	23	215	180	250	4	425	201	122	110	196
					≤ 9	≥ 10			i_N ≤ 9			i_N = 10 ... 16																				
140	140	212	352	162	202	188	70	38	80	572	28	60	538	24	50	528	3)	150	103.5	180	18	M12	23	265	230	300	4	440	201	122	125	225
					≤ 8	≥ 9			i_N ≤ 8			i_N = 9 ... 16																				
160	160	252	412	201	246	226	80	48	110	696	38	80	646	32	80	646	M16	180	128.5	–	22	M16	28	265	230	300	4	520	249	155	136	348
					≤ 9	≥ 10			i_N ≤ 9			i_N = 10 ... 16																				
180	180	252	432	201	246	226	90	48	110	716	38	80	666	32	80	666	M16	180	128.5	225	22	M16	28	300	250	350	5	540	249	155	150	399
					≤ 8	≥ 9			i_N ≤ 8			i_N = 9 ... 16																				
200	200	320	520	250	305	282	100	55	110	840	48	110	817	38	80	787	3)	225	158	–	27	M20	34	350	300	400	5	650	307	190	167	622
					≤ 9	≥ 10			i_N ≤ 9			i_N = 10 ... 16																				
225	225	320	545	250	305	282	110	55	110	865	48	110	842	38	80	812	M20	225	158	280	27	M20	34	400	350	450	5	675	307	190	180	714
					≤10	≥11.2			i_N ≤ 10			i_N = 11.2 ... 16																				
250	250	396	646	310	380	357	125	70	140	1050	55	110	997	48	110	997	3)	280	195	–	33	M24	42	500	450	550	5	810	380	238	206	1 091
					≤11.2	≥12.5			i_N ≤ 11.2			i_N = 12.5 ... 16																				
280	280	396	676	310	380	357	140	70	140	1080	55	110	1027	48	110	1027	M24	280	195	355	33	M24	42	500	450	550	5	840	380	238	222	1 252
									i_N ≤ 10			i_N = 11.2 ... 16																				
320, 321	320	510	830	386	480		160	90	170	1325	70	140	1295	70	140	1295	3)	355	241	–	39	M30	52	600	550	660	6	1030	470	290	254	1 944
									i_N ≤ 11.2			i_N = 12.5 ... 16																				
360	360	510	870	386	480		180	90	170	1365	70	140	1335	70	140	1335	M30	355	241	450	39	M30	52	600	550	660	6	1070	470	290	273	2 233

See notes on following page.

Designs (direction of rotation)

R CI 50 ... 100

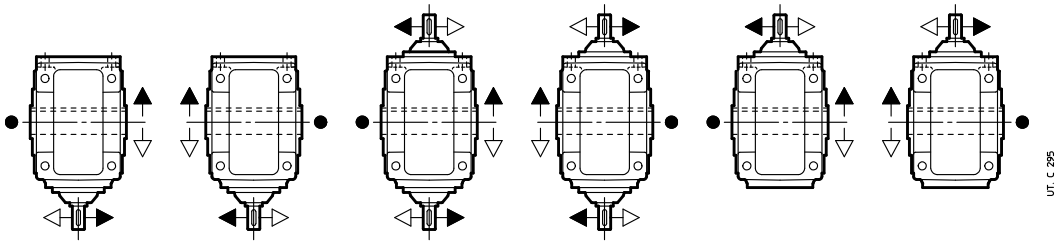

R CI 125 ... 360

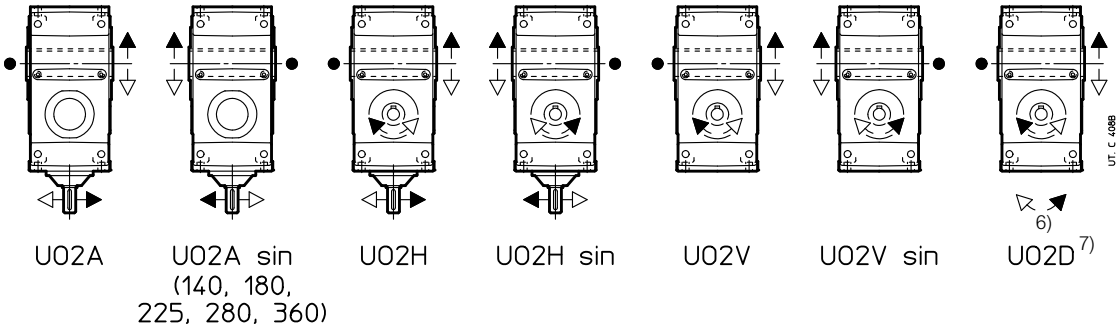

● Position of reference groove (see ch. 6) for radial load verification.
∗ Machined surface and N. 2 threaded holes (dimensions in ch. 6 «Gear reducer input face») on opposite side (not in view) too.
1) Working length of thread 2 · F.
2) Working length of thread 2 · K1.
3) For dimension, number and angular position see ch. 6.
4) Not possible for size 50 with $i_N < 8$.
6) Direction of rotation of the second high speed shaft overhang not in view.
7) Design not possible for sizes 140, 180, 225, 280 and 360.

42

Mounting positions

Unless otherwise stated, gear reducers are supplied in mounting position **B3** (see ch. 2).

R CI 50 ... 100

Designs:

UO3A
UO3Asin
UO3D
UO3Dsin
UO3E
UO3Esin

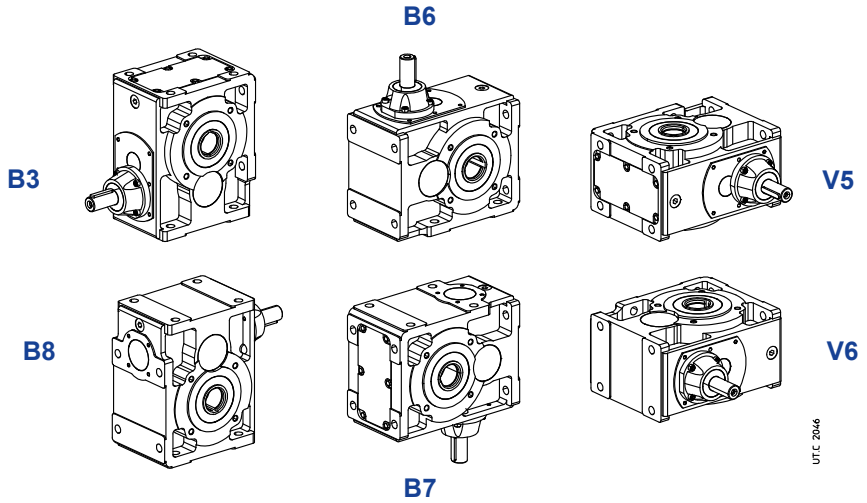

R CI 125 ... 360

Designs:

(1)
UO2A
UO2Asin
UO2H
UO2Hsin

(2)
UO2V
UO2Vsin
UO2D

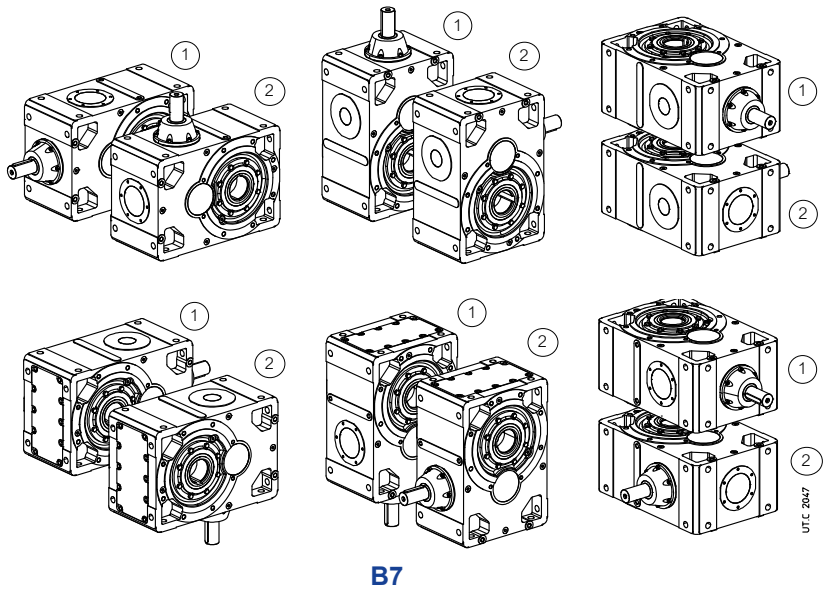

Oil quantity R CI 50 ... 360

Stated oil quantities [gal] are approximate for provisioning. The exact oil quantity the gear reducer is to be filled with is defined by the level plug.

Mounting position	50	63, 64	80, 81	100	125	140	160	180	200	225	250	280	320, 321	360
B3	0.11	0.21	0.34	0.69	1.4	2.2	2.8	4.3	5.4	8.3	11	16	21	32
B8	0.16	0.26	0.53	1	1.4	1.5	2.8	2.8	5.4	5.5	11	11	21	21
B6	0.11	0.21	0.34	0.77	1.8	2.3	3.6	4.5	7.1	8.8	14	17	27	34
B7	0.11	0.21	0.34	0.77	2	2.6	4	5	7.7	9.8	15	19	29	37
V5	0.12	0.25	0.48	0.92	2.4	2.7	4.6	5.3	9	10	18	20	34	40
V6	0.12	0.25	0.48	0.92	2.4	2.7	4.6	5.3	9	10	18	20	34	40

Lubrication details

R CI 100

Designs:

UO3A
UO3A sin
UO3D
UO3D sin
UO3E
UO3Esin

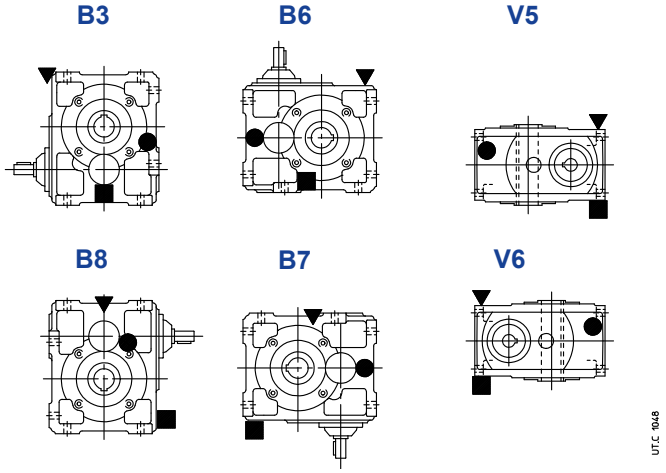

R CI 125 ... 360

Designs:

(1)
UO2A
UO2Asin
UO2H
UO2Hsin
(2)
UO2V
UO2Vsin
UO2D

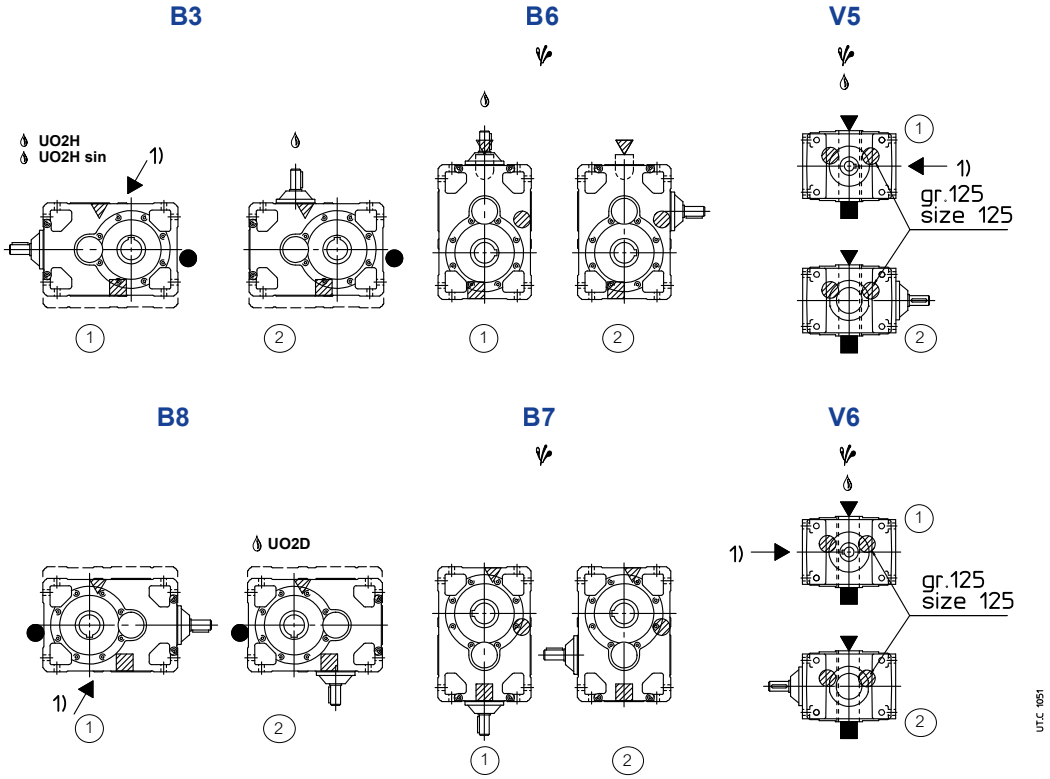

1) Position of intermediate hole for mounting position identification.
Possible high oil splash: for the corrective factor ft_3 of nominal thermal power Pt_N see ch. 4.
Possible bearing lubrication pump or high speed shaft lubrication device (see ch. 17 (19)).

▼ oil filler plug
● oil level plug
■ oil drain plug
▽ oil filler plug on opposite side (not in view)
◍ oil level plug on opposite side (not in view)
▨ oil drain plug on opposite side (not in view)

10.2 - Gear reducers R ICI

Dimensions

R ICI 50 ... 200

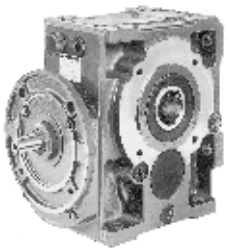

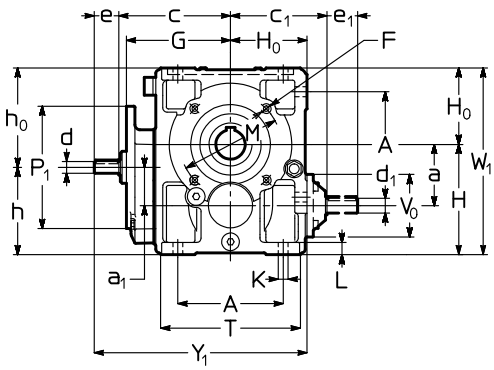

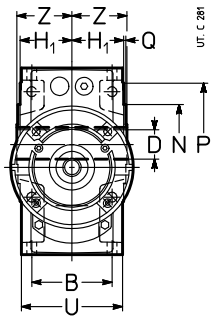

Size	a	a_1	A	B	c	c_1	D Ø H7	d Ø	e	Y_1	d Ø	e	Y_1	d_1 Ø	e_1	d_1 Ø	e_1	F	G	H h11	H_0 h11	H_1 h12	h h11	h_0 h11	K Ø	L	M Ø	N Ø h6	P Ø	P_1	Q	T	U	V_0 Ø	W_1	Z	lb
								$i_N \leq 80$			$i_N \geq 100$			4) $i_N \leq 40$		5) $i_N \geq 50$		1)																			
50	50	40	86	75	107	94	24	11	23	197	–	–	–	16	30	14	30	M6	98	100	67	49	90	77	9.5	12	85	70	105	140[3]	2.5	120	95	78	167	53	24
63	63	50	102	90	127	108	30	14	30	237	14	30	237	16	30	14	30	M8	118	125	80	58.5	112	93	11.5	14	100	80	120	160[3]	3	143	114	78	205	63	37
64	63	50	102	90	127	108	32	14	30	237	14	30	237	16	30	14	30	M8	118	125	80	58.5	112	93	11.5	14	100	80	120	160[3]	3	143	114	78	205	63	37
80	80	50	132	106	147	131	38	14	30	277	14	30	277	19	40	16	30	M10	138	150	100	69.5	120	130	14	17	130	110	160	160[3]	3.5	180	135	86	250	75	62
81	80	50	132	106	147	131	40	14	30	277	14	30	277	19	40	16	30	M10	138	150	100	69.5	120	130	14	17	130	110	160	160[3]	3.5	180	135	86	250	75	62
100	100	62.5	172	131	181	157	48	19	40	346	16	30	336	24	50	19	40	M12	170	180	125	84.5	143	162	16	20	165	130	200	200	3.5	228	165	104	305	90	110
125	125	80	212	162	216	188	60	24	50	416	19	40	406	28	60	24	50	2)	205	225	150	103.5	180	195	18	23	215	180	250	200	4	274	201	122	375	110	194
140	140	80	212	162	216	188	70	24	50	416	19	40	406	28	60	24	50	2)	205	240	150	103.5	180	210	18	23	265	230	300	200	4	274	201	122	390	125	225
160	160	100	252	201	258	226	80	28	60	498	24	50	488	38	80	32	80	2)	247	280	180	128.5	220	240	22	28	265	230	300	250	4	328	249	155	460	136	362
180	180	100	252	201	258	226	90	28	60	498	24	50	488	38	80	32	80	2)	247	300	180	128.5	220	260	22	28	300	250	350	250	5	328	249	155	480	150	414
200	200	125	320	250	318	282	100	32	80	623	32	80	623	48	110	38	80	2)	305	355	225	158	280	300	27	34	350	300	400	300	5	410	307	190	580	167	653

Designs (direction of rotation)

R ICI 50 ... 200

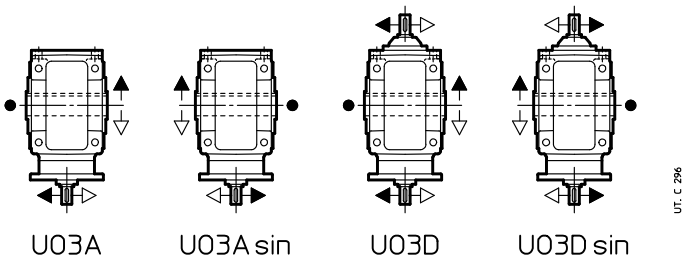

● Position of reference groove (see ch. 6) for radial load verification.
1) Working length of thread 2 · F.
2) For dimension, number and angular position see ch. 6.
3) Square flange: for dimensions see ch. 6.
4) For sizes 140 and 180 the dimensions are valid for $i_N \leq 50$ and $i_N = 100$.
5) For sizes 140 and 180 the dimensions are valid for the following ratios $i_N = 63$, $i_N = 80$, $i_N = 125$ and $i_N = 160$.

Mounting positions

Unless otherwise stated, gear reducers are supplied in mounting position **B3** (see ch. 2).

R ICI 50 ... 200

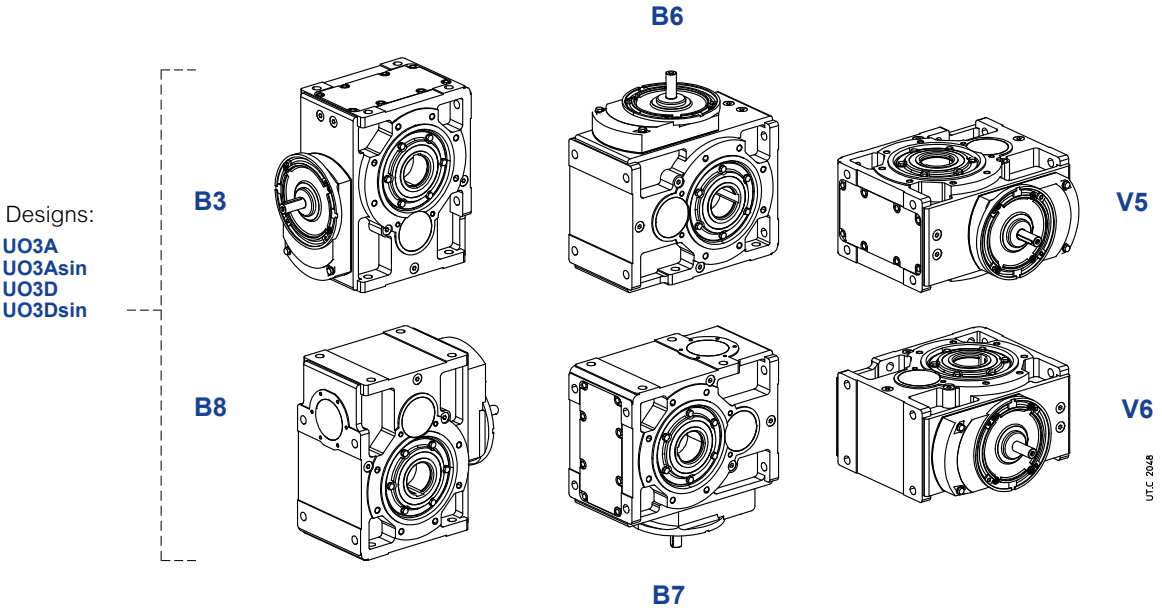

Oil quantity R ICI 50 ... 200

Stated oil quantities [gal] are approximate for provisioning. The exact oil quantity the gear reducer is to be filled with is defined by the level plug.

Mounting position	50	63, 64	80, 81	100	125	140	160	180	200
B3	0.12	0.26	0.42	0.79	1.6	1.8	2.8	3.1	5.3
B8	0.17	0.32	0.58	1.1	2.4	2.8	4.2	5	7.9
B6	0.21	0.42	0.71	1.5	3.1	3.6	5.5	6.6	11
B7	0.12	0.26	0.42	0.79	1.6	1.8	2.8	3.1	5.3
V5	0.13	0.3	0.53	1	1.8	2.2	3.4	4	6.3
V6	0.13	0.3	0.53	1	1.8	2.2	3.4	4	6.3

Lubrication details

R ICI 100 ... 200

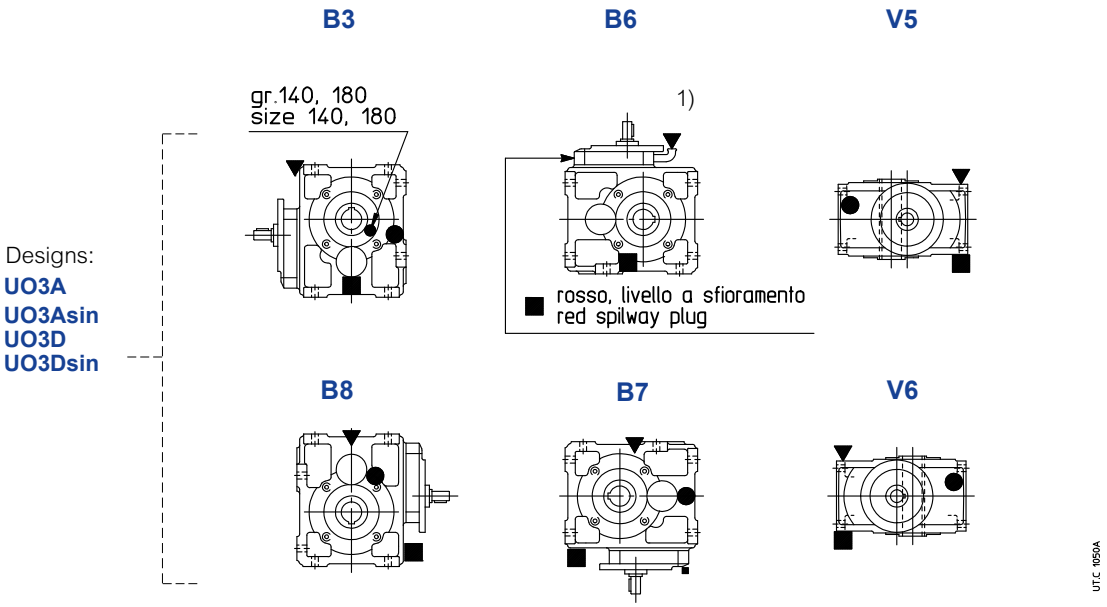

1) See also ch. 6 page 43.

▼ oil filler plug
● oil level plug
■ oil drain plug

Blank page.

10.3 - Gear reducers R C2I

Dimensions

R C2I 140 ... 360

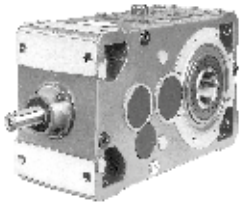

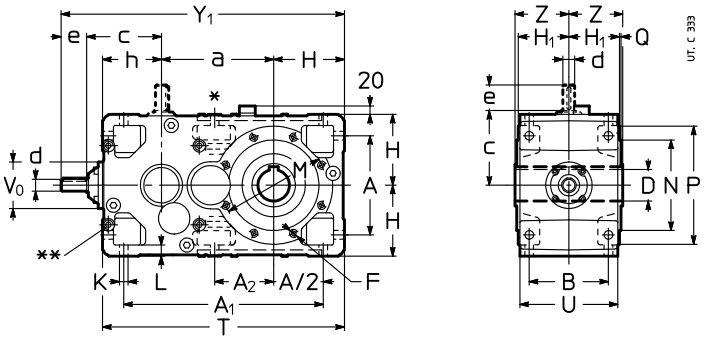

Size	a	A	A_1	A_2	B	c i_N ≤ 31.5	c i_N ≥ 35.5	D Ø H7	d Ø (i_N ≤ 31.5)	e (i_N ≤ 31.5)	Y_1 (i_N ≤ 31.5)	d Ø (i_N = 35.5 ... 63)	e (i_N = 35.5 ... 63)	Y_1 (i_N = 35.5 ... 63)	d Ø (i_N ≥ 71)	e (i_N ≥ 71)	Y_1 (i_N ≥ 71)	F 1)	H h11	H_1 h12	h h11	K Ø	L	M Ø	N Ø h6	P Ø	Q	T	U	V_0 Ø	Z	lb
140	240	212	427	127	162	168	157	70	28	60	618	24	50	597	19	40	587	2)	150	103.5	125	18	23	265	230	300	4	515	201	104	125	245
160	285	252	507	150*	201	202	188	80	38	80	747	28	60	713	24	50	703	M16	180	128.5	150	22	28	265	230	300	4	615	249	122	136	401
180	305	252	527	170	201	202	188	90	38	80	767	28	60	733	24	50	723	M16	180	128.5	150	22	28	300	250	350	5	635	249	122	150	441
200	360	320	635	198*	250	246	226	100	48	110	941	38	80	891	32	80	891	2)	225	158	180	27	34	350	300	400	5	765	307	155	167	708
225	385	320	660	223	250	246	226	110	48	110	966	38	80	916	32	80	916	M20	225	158	180	27	34	400	350	450	5	790	307	155	180	776
250	450	396	791	247*	310	305	282	125	55	110	1145	48	110	1122	38	80	1092	2)	280	195	225	33	42	500	450	550	5	955	380	190	206	1241
280	480	396	821	277	310	305	282	140	55	110	1175	48	110	1152	38	80	1122	M24	280	195	225	33	42	500	450	550	5	985	380	190	222	1360
320, 321	570	510	1005	318*	386	380	357	160	70	140	1445	55	110	1392	48	110	1392	2)	355	241	280	39	52	600	550	660	6	1205	470	238	254	2185
360	610	510	1045	358	386	380	357	180	70	140	1485	55	110	1432	48	110	1432	M30	355	241	280	39	52	600	550	660	6	1245	470	238	273	2394

Designs (direction of rotation)

R C2I 140 ... 360

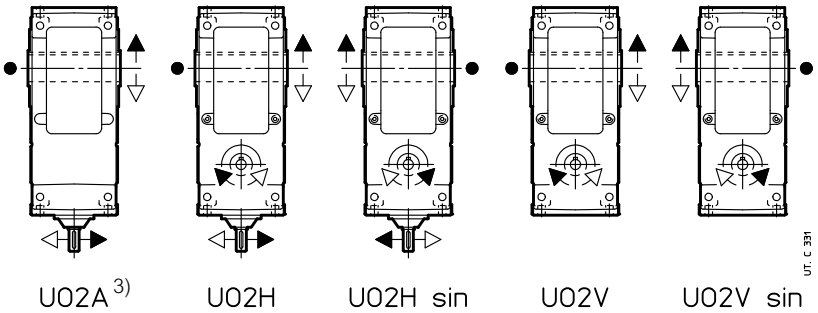

- ● Position of reference groove (see ch. 6) for radial load verification.
- * Only No. 2 holes M 16×32 (size 160), M 20×38 (size 200), M 24×46 (size 250) and M 30×58 (sizes 320 and 321) and not for design UO2A.
- * *Machined surface and N.4 threaded holes (dimensions in ch. 6 «Gear reducer input face») on opposite side (not in view) too.
1) Working length of thread 2 · F.
2) For dimension, number and angular position see ch. 6.
3) The housing of this design is not pre-arranged for the other designs.

42

Mounting positions

Unless otherwise stated, gear reducers are supplied in mounting position **B3** (see ch. 2).

R C2I 140 ... 360

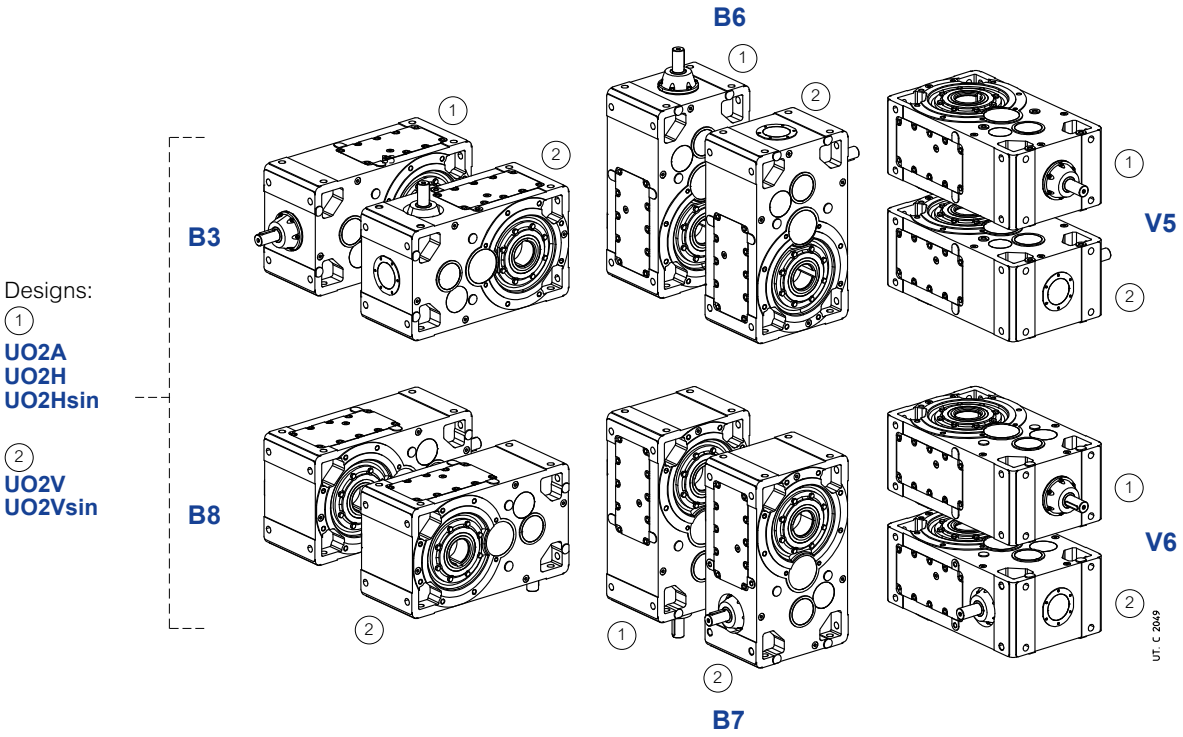

Oil quantity R C2I 140 ... 360

Stated oil quantities [gal] are approximate for provisioning. The exact oil quantity the gear reducer is to be filled with is defined by the level plug.

Mounting position	140	160	180	200	225	250	280	320, 321	360
B3	1.7	3.2	3.4	6.6	6.9	12	13	26	26
B8	1.7	3.2	3.4	6.6	6.9	12	13	26	26
B6	2.9	5.3	5.5	10	11	20	21	40	41
B7	2.6	4.8	5	9.2	9.8	18	19	36	37
V5	2.6	4.8	5	9.2	9.8	18	19	36	37
V6	2.6	4.8	5	9.2	9.8	18	19	36	37

Lubrication details

R C2I 140 ... 360

Designs:

(1)
UO2A
UO2H
UO2Hsin

(2)
UO2V
UO2Vsin

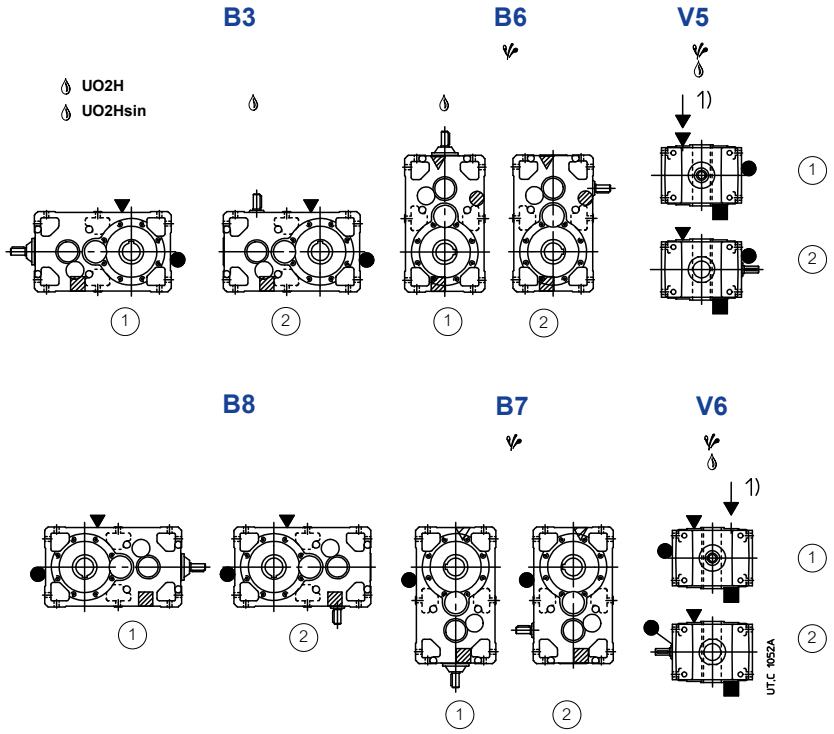

1) Position of intermediate hole for mounting position identification.
Possible high oil splash: for the corrective factor f_{t_3} of nominal thermal power Pt_N see ch. 4.
Possible bearing lubrication pump or high speed shaft lubrication device (see ch. 17 (19)).

▼ oil filler plug
● oil level plug
■ oil drain plug
▽ oil filler plug on opposite side (not in view)
◍ oil level plug on opposite side (not in view)
▨ oil drain plug on opposite side (not in view)

11 – Helical gearmotor selection tables

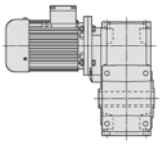

Motor power P_1 hp 1)	Output speed n_2 rpm	Output torque T_2 lb in	Service factor f_S							Gear ratio i
0,12	4,37	1 590	1,9	MR	4I	63 - 11 × 140	63 A		6	263
	4,2	1 660	2,24	MR	4I	64 - 11 × 140	63 A		6	274
	5,46	1 270	2,8	MR	4I	63 - 11 × 140	63 A		6	210
	5,25	1 330	3,15	MR	4I	64 - 11 × 140	63 A		6	219
	6,65	1 050	3,35	MR	4I	63 - 11 × 140	63 A		6	173
	8,06	865	4	MR	4I	63 - 11 × 140	63 A		6	143
	9,81	710	5	MR	4I	63 - 11 × 140	63 A		6	117
	13,6	520	4,5	MR	3I	63 - 11 × 140	63 A		6	84,3
	17,9	400	1,6	MR	3I	40 - 11 × 140	63 A		6	64,3
	18,2	390	3	MR	3I	50 - 11 × 140	63 A		6	63,2
	21,6	330	2,24	MR	3I	40 - 11 × 140	63 A		6	53,2
	22,1	320	4,25	MR	3I	50 - 11 × 140	63 A		6	52
	26,2	270	3,15	MR	3I	40 - 11 × 140	63 A		6	43,9
	29,7	240	2,5	MR	3I	40 - 11 × 140	63 A		6	38,7
	35,9	200	3,75	MR	3I	40 - 11 × 140	63 A		6	32
	43,6	165	5,3	MR	3I	40 - 11 × 140	63 A		6	26,4
	43,1	170	3,55	MR	2I	40 - 11 × 140	63 A		6	26,7
	56,3	125	6,7	MR	3I	40 - 11 × 140	63 A		6	20,4
	52	140	5,3	MR	2I	40 - 11 × 140	63 A		6	22,1
	63,1	115	7,1	MR	2I	40 - 11 × 140	63 A		6	18,2
	71,6	100	6	MR	2I	40 - 11 × 140	63 A		6	16,1
	86,5	84	8,5	MR	2I	40 - 11 × 140	63 A		6	13,3
	105	69	11,8	MR	2I	40 - 11 × 140	63 A		6	11
0,16	4,37	2 120	1,4	MR	4I	63 - 11 × 140	63 B		6	263
	4,2	2 210	1,7	MR	4I	64 - 11 × 140	63 B		6	274
	5,46	1 700	2	MR	4I	63 - 11 × 140	63 B		6	210
	5,25	1 770	2,36	MR	4I	64 - 11 × 140	63 B		6	219
	6,65	1 390	2,12	MR	4I	63 - 11 × 140	63 A		4	263
	6,4	1 450	2,5	MR	4I	64 - 11 × 140	63 A		4	274
	6,65	1 390	2,5	MR	4I	63 - 11 × 140	63 B		6	173
	6,37	1 460	3	MR	4I	64 - 11 × 140	63 B		6	180
	8,32	1 120	3,15	MR	4I	63 - 11 × 140	63 A		4	210
	10,1	915	3,75	MR	4I	63 - 11 × 140	63 A		4	173
	12,3	755	4,5	MR	4I	63 - 11 × 140	63 A		4	143
	13,6	695	3,55	MR	3I	63 - 11 × 140	63 B		6	84,3
	17,9	530	1,18	MR	3I	40 - 11 × 140	63 B		6	64,3
	18,2	520	2,24	MR	3I	50 - 11 × 140	63 B		6	63,2
	14,9	620	5,6	MR	4I	63 - 11 × 140	63 A		4	117
	17	555	5	MR	3I	63 - 11 × 140	63 B		6	67,5
	21,6	440	1,7	MR	3I	40 - 11 × 140	63 B		6	53,2
	22,1	430	3,15	MR	3I	50 - 11 × 140	63 B		6	52
	20,8	455	5,3	MR	3I	63 - 11 × 140	63 A		4	84,3
	27,2	350	1,7	MR	3I	40 - 11 × 140	63 A		4	64,3
	26,2	360	2,36	MR	3I	40 - 11 × 140	63 B		6	43,9
	27,7	340	3,35	MR	3I	50 - 11 × 140	63 A		4	63,2
	32,9	290	2,5	MR	3I	40 - 11 × 140	63 A		4	53,2
	33,6	280	4,75	MR	3I	50 - 11 × 140	63 A		4	52
	39,9	240	3,55	MR	3I	40 - 11 × 140	63 A		4	43,9
	45,2	210	2,8	MR	3I	40 - 11 × 140	63 A		4	38,7
	43,1	225	2,65	MR	2I	40 - 11 × 140	63 B		6	26,7
	54,7	175	4,25	MR	3I	40 - 11 × 140	63 A		4	32
	52	185	4	MR	2I	40 - 11 × 140	63 B		6	22,1
	66,3	145	6	MR	3I	40 - 11 × 140	63 A		4	26,4
	65,5	150	4	MR	2I	40 - 11 × 140	63 A		4	26,7
	85,7	110	7,1	MR	3I	40 - 11 × 140	63 A		4	20,4
	79,2	120	6	MR	2I	40 - 11 × 140	63 A		4	22,1
	96,1	100	8	MR	2I	40 - 11 × 140	63 A		4	18,2
	109	89	6,7	MR	2I	40 - 11 × 140	63 A		4	16,1
	132	74	9,5	MR	2I	40 - 11 × 140	63 A		4	13,3

Motor power P_1 hp 1)	Output speed n_2 rpm	Output torque T_2 lb in	Service factor f_S							Gear ratio i
0,16	160	61	13,2	MR	2I	40 - 11 × 140	63 A		4	11
	106	46,9	16	MR	2I	40 - 11 × 140	63 A		4	8,48
0,25	3,66	3 960	1,6	MR	4I	80 - 14 × 160	71 A		6	314
	3,66	3 960	1,9	MR	4I	81 - 14 × 160	71 A		6	314
	4,37	3 320	1,9	MR	4I	80 - 14 × 160	71 A		6	263
	4,37	3 320	2,24	MR	4I	81 - 14 × 160	71 A		6	263
	6,03	2 400	1,25	MR	4I	63 - 14 × 160	71 A		6	191
	5,8	2 500	1,5	MR	4I	64 - 14 × 160	71 A		6	198
	5,45	2 660	2,8	MR	4I	80 - 14 × 160	71 A		6	211
	5,45	2 660	3,15	MR	4I	81 - 14 × 160	71 A		6	211
	6,65	2 180	1,4	MR	4I	63 - 11 × 140	63 B		4	263
	6,4	2 270	1,6	MR	4I	64 - 11 × 140	63 B		4	274
	7,54	1 920	1,8	MR	4I	63 - 14 × 160	71 A		6	152
	7,24	2 000	2,12	MR	4I	64 - 14 × 160	71 A		6	159
	7,25	2 000	3,55	MR	4I	80 - 14 × 160	71 A		6	159
	7,25	2 000	4,25	MR	4I	81 - 14 × 160	71 A		6	159
	8,32	1 740	2	MR	4I	63 - 11 × 140	63 B		4	210
	7,98	1 820	2,36	MR	4I	64 - 11 × 140	63 B		4	219
	9,18	1 580	2,24	MR	4I	63 - 14 × 160	71 A		6	125
	8,3	1 750	4,25	MR	4I	80 - 14 × 160	71 A		6	139
	10,1	1 430	2,5	MR	4I	63 - 11 × 140	63 B		4	173
	9,7	1 490	3	MR	4I	64 - 11 × 140	63 B		4	180
	12,3	1 180	3	MR	4I	63 - 11 × 140	63 B		4	143
	14,9	970	3,55	MR	4I	63 - 11 × 140	63 B		4	117
	18,8	785	3	MR	3I	63 - 14 × 160	71 A		6	61,1
	24,9	595	2	MR	3I	50 - 14 × 160	71 A		6	46,2
	20,8	715	3,35	MR	3I	63 - 11 × 140	63 B		4	84,3
	27,2	545	1,12	MR	3I	40 - 11 × 140	63 B		4	64,3
	27,7	535	2,12	MR	3I	50 - 11 × 140	63 B		4	63,2
	32,9	450	1,6	MR	3I	40 - 11 × 140	63 B		4	53,2
	33,6	440	3	MR	3I	50 - 11 × 140	63 B		4	52
	39,9	370	2,36	MR	3I	40 - 11 × 140	63 B		4	43,9
	45,2	325	1,8	MR	3I	40 - 11 × 140	63 B		4	38,7
	43,1	350	1,7	MR	2I	40 - 14 × 140	71 A	B5A	6	26,7
	41,3	360	4,5	MR	3I	50 - 11 × 140	63 B		4	42,4
	47,1	320	3,55	MR	2I	50 - 14 × 160	71 A		6	24,4
	54,7	270	2,65	MR	3I	40 - 11 × 140	63 B		4	32
	52	290	2,5	MR	2I	40 - 14 × 140	71 A	B5A	6	22,1
	49,6	300	6	MR	3I	50 - 11 × 140	63 B		4	35,3
	66,3	225	3,75	MR	3I	40 - 11 × 140	63 B		4	26,4
	65,5	230	2,5	MR	2I	40 - 11 × 140	63 B		4	26,7
	85,7	175	4,5	MR	3I	40 - 11 × 140	63 B		4	20,4
	79,2	190	3,75	MR	2I	40 - 11 × 140	63 B		4	22,1
	96,1	155	5	MR	2I	40 - 11 × 140	63 B		4	18,2
	109	140	4,25	MR	2I	40 - 11 × 140	63 B		4	16,1
	132	115	6	MR	2I	40 - 11 × 140	63 B		4	13,3
	160	95	8,5	MR	2I	40 - 11 × 140	63 B		4	11
	206	73	10	MR	2I	40 - 11 × 140	63 B		4	8,48
0,33	3,66	5 230	1,4	MR	4I	81 - 14 × 160	71 B		6	314
	4,37	4 380	1,5	MR	4I	80 - 14 × 160	71 B		6	263
	4,37	4 380	1,7	MR	4I	81 - 14 × 160	71 B		6	263
	5,57	3 440	1,9	MR	4I	80 - 14 × 160	71 A		4	314
	5,57	3 440	2,12	MR	4I	81 - 14 × 160	71 A		4	314
	5,45	3 510	2,12	MR	4I	80 - 14 × 160	71 B		6	211
	5,45	3 510	2,5	MR	4I	81 - 14 × 160	71 B		6	211
	6,4	2 990	1,25	MR	4I	64 - 11 × 140	63 C		4	274
	7,54	2 540	1,4	MR	4I	63 - 14 × 160	71 B		6	152
	7,24	2 640	1,6	MR	4I	64 - 14 × 160	71 B		6	159
	6,65	2 880	2,24	MR	4I	80 - 14 × 160	71 A		4	263
	6,65	2 880	2,65	MR	4I	81 - 14 × 160	71 A		4	263
	7,25	2 640	2,65	MR	4I	80 - 14 × 160	71 B		6	159

1) Powers valid for continuous duty S1; **increase possible** for duty cycles S2 ... S10 (see ch. 1 «General specifications»): in which case M_2 increases and f_S decreases.
2) For complete designation when ordering see ch. 2.
** Mounting position **B5A** (see ch. 1.2).

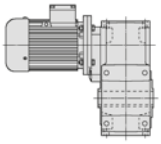

Motor power P_1 hp 1)	Output speed n_2 rpm	Output torque T_2 lb in	Service factor fs								Gear ratio i
0,33	8,32	2 300	1,5	MR	4I	63 - 11 × 140	63 C		4		210
	7,98	2 400	1,8	MR	4I	64 - 11 × 140	63 C		4		219
	9,18	2 080	1,4	MR	4I	63 - 14 × 160	71 A		4		191
	8,83	2 170	1,7	MR	4I	64 - 14 × 160	71 A		4		198
	9,18	2 080	1,7	MR	4I	63 - 14 × 160	71 B		6		125
	8,8	2 170	2	MR	4I	64 - 14 × 160	71 B		6		131
	8,3	2 310	3,15	MR	4I	80 - 14 × 160	71 A		4		211
	10,1	1 890	1,8	MR	4I	63 - 11 × 140	63 C		4		173
	9,7	1 970	2,24	MR	4I	64 - 11 × 140	63 C		4		180
	11,5	1 670	2,12	MR	4I	63 - 14 × 160	71 A		4		152
	11	1 740	2,5	MR	4I	64 - 14 × 160	71 A		4		159
	11	1 730	4	MR	4I	80 - 14 × 160	71 A		4		159
	11,6	1 680	3	MR	3I	80 - 14 × 160	71 B		6		98,8
	11,6	1 680	3,55	MR	3I	81 - 14 × 160	71 B		6		98,8
	12,3	1 560	2,24	MR	4I	63 - 11 × 140	63 C		4		143
	11,8	1 630	2,65	MR	4I	64 - 11 × 140	63 C		4		149
	14	1 370	2,5	MR	4I	63 - 14 × 160	71 A		4		125
	13,4	1 430	3,15	MR	4I	64 - 14 × 160	71 A		4		131
	13,9	1 410	3,75	MR	3I	80 - 14 × 160	71 B		6		82,7
	13,9	1 410	4,25	MR	3I	81 - 14 × 160	71 B		6		82,7
	14,9	1 280	2,65	MR	4I	63 - 11 × 140	63 C		4		117
	14,3	1 340	3,35	MR	4I	64 - 11 × 140	63 C		4		122
	18,8	1 040	2,36	MR	3I	63 - 14 × 160	71 B		6		61,1
	24,9	785	1,5	MR	3I	50 - 14 × 160	71 B		6		46,2
	20,8	940	2,5	MR	3I	63 - 11 × 140	63 C		4		84,3
	23,5	830	3,35	MR	3I	63 - 14 × 160	71 B		6		48,9
	27,7	705	1,7	MR	3I	50 - 11 × 140	63 C		4		63,2
	30,3	645	2,12	MR	3I	50 - 14 × 160	71 B		6		38
	25,9	755	3,75	MR	3I	63 - 11 × 140	63 C		4		67,5
	28,6	680	3,55	MR	3I	63 - 14 × 160	71 A		4		61,1
	32,9	595	1,25	MR	3I	40 - 11 × 140	63 C		4		53,2
	33,6	580	2,36	MR	3I	50 - 11 × 140	63 C		4		52
	37,9	515	2,24	MR	3I	50 - 14 × 160	71 A		4		46,2
	37,2	525	3	MR	3I	50 - 14 × 160	71 B		6		30,9
	35,8	545	5	MR	3I	63 - 14 × 160	71 A		4		48,9
	39,9	490	1,7	MR	3I	40 - 11 × 140	63 C		4		43,9
	45,2	430	1,4	MR	3I	40 - 11 × 140	63 C		4		38,7
	43,1	465	1,32	MR	2I	40 - 14 × 140	71 B	B5A	6		26,7
	41,3	475	3,35	MR	3I	50 - 11 × 140	63 C		4		42,4
	46,1	425	3,15	MR	3I	50 - 14 × 160	71 A		4		38
	47,1	425	2,65	MR	2I	50 - 14 × 160	71 B		6		24,4
	54,7	360	2	MR	3I	40 - 11 × 140	63 C		4		32
	52	385	1,9	MR	2I	40 - 14 × 140	71 B	B5A	6		22,1
	49,6	395	4,5	MR	3I	50 - 11 × 140	63 C		4		35,3
	56,6	345	4,5	MR	3I	50 - 14 × 160	71 A		4		30,9
	57,3	350	3,75	MR	2I	50 - 14 × 160	71 B		6		20,1
	66,3	295	2,8	MR	3I	40 - 11 × 140	63 C		4		26,4
	65,5	305	1,9	MR	2I	40 - 11 × 140	63 C		4		26,7
	63,1	315	2,65	MR	2I	40 - 14 × 140	71 B	B5A	6		18,2
	75,2	260	6	MR	3I	50 - 14 × 160	71 A		4		23,3
	71,7	280	4	MR	2I	50 - 11 × 140	63 C		4		24,4
	71,7	280	4	MR	2I	50 - 14 × 160	71 A		4		24,4
	85,7	230	3,55	MR	3I	40 - 11 × 140	63 C		4		20,4
	79,2	250	2,8	MR	2I	40 - 11 × 140	63 C		4		22,1
	90,3	215	8	MR	3I	50 - 14 × 160	71 A		4		19,4
	87,2	230	5,6	MR	2I	50 - 11 × 140	63 C		4		20,1
	87,2	230	5,6	MR	2I	50 - 14 × 160	71 A		4		20,1
	96,1	210	3,75	MR	2I	40 - 11 × 140	63 C		4		18,2
	109	185	3,15	MR	2I	40 - 11 × 140	63 C		4		16,1
	107	185	8	MR	2I	50 - 11 × 140	63 C		4		16,3
	107	185	8	MR	2I	50 - 14 × 160	71 A		4		16,3
	132	150	4,75	MR	2I	40 - 11 × 140	63 C		4		13,3
	160	125	6,3	MR	2I	40 - 11 × 140	63 C		4		11
	206	97	7,5	MR	2I	40 - 11 × 140	63 C		4		8,48
	259	77	6	MR	2I	40 - 11 × 140	63 C		4		6,75

Motor power P_1 hp 1)	Output speed n_2 rpm	Output torque T_2 lb in	Service factor fs								Gear ratio i
0,5	3,3	8 790	1,4	MR	4I	100 - 19 × 200	80 A		6		349
	4,01	7 230	1,9	MR	4I	100 - 19 × 200	80 A		6		287
	4,79	6 050	2,24	MR	4I	100 - 19 × 200	80 A		6		240
	5,57	5 210	1,25	MR	4I	80 - 14 × 160	71 B		4		314
	5,57	5 210	1,4	MR	4I	81 - 14 × 160	71 B		4		314
	5,45	5 320	1,4	MR	4I	80 - 14 × 160	71 C		6		211
	5,45	5 320	1,6	MR	4I	81 - 14 × 160	71 C		6		211
	5,48	5 290	1,4	MR	4I	81 - 19 × 200	80 A		6		210
	5,88	4 930	3,15	MR	4I	100 - 19 × 200	80 A		6		196
	6,65	4 360	1,5	MR	4I	80 - 14 × 160	71 B		4		263
	6,65	4 360	1,7	MR	4I	81 - 14 × 160	71 B		4		263
	7,25	4 000	1,7	MR	4I	80 - 14 × 160	71 C		6		159
	7,25	4 000	2,12	MR	4I	81 - 14 × 160	71 C		6		159
	6,83	4 240	1,7	MR	4I	80 - 19 × 200	80 A		6		168
	6,83	4 240	2	MR	4I	81 - 19 × 200	80 A		6		168
	7,06	4 100	3,75	MR	4I	100 - 19 × 200	80 A		6		163
	8,8	3 290	1,32	MR	4I	64 - 14 × 160	71 C		6		131
	8,3	3 490	2,12	MR	4I	80 - 14 × 160	71 B		4		211
	8,3	3 490	2,5	MR	4I	81 - 14 × 160	71 B		4		211
	11,5	2 530	1,4	MR	4I	63 - 14 × 160	71 B		4		152
	11	2 630	1,6	MR	4I	64 - 14 × 160	71 B		4		159
	11	2 630	2,65	MR	4I	80 - 14 × 160	71 B		4		159
	11	2 630	3,35	MR	4I	81 - 14 × 160	71 B		4		159
	11,6	2 540	2	MR	3I	80 - 14 × 160	71 C		6		98,8
	11,6	2 540	2,36	MR	3I	81 - 14 × 160	71 C		6		98,8
	14	2 070	1,7	MR	4I	63 - 14 × 160	71 B		4		125
	13,4	2 170	2	MR	4I	64 - 14 × 160	71 B		4		131
	12,6	2 300	3,15	MR	4I	80 - 14 × 160	71 B		4		139
	13,9	2 130	2,36	MR	3I	80 - 14 × 160	71 C		6		82,7
	13,9	2 130	2,8	MR	3I	81 - 14 × 160	71 C		6		82,7
	16,9	1 710	2	MR	4I	63 - 14 × 160	71 B		4		103
	16,3	1 780	2,36	MR	4I	64 - 14 × 160	71 B		4		108
	18,8	1 570	1,5	MR	3I	63 - 14 × 160	71 C		6		61,1
	16,8	1 730	4,25	MR	4I	80 - 14 × 160	71 B		4		104
	17,7	1 670	3	MR	3I	80 - 14 × 160	71 B		4		98,8
	20,6	1 410	2,5	MR	4I	63 - 14 × 160	71 B		4		84,9
	20,8	1 430	1,7	MR	3I	63 - 11 × 140	71 B	B5R	4		84,3
	20	1 480	2,12	MR	3I	64 - 11 × 140	71 B	B5R	4		87,7
	23,5	1 260	2,24	MR	3I	63 - 14 × 160	71 C		6		48,9
	23,5	1 260	1,9	MR	3I	63 - 19 × 200	80 A		6		48,9
	22,6	1 310	2,5	MR	3I	64 - 19 × 200	80 A		6		50,9
	21,2	1 400	3,75	MR	3I	80 - 14 × 160	71 B		4		82,7
	27,7	1 070	1,06	MR	3I	50 - 11 × 140	71 B	B5R	4		63,2
	30,3	980	1,4	MR	3I	50 - 14 × 160	71 C		6		38
	25,9	1 140	2,5	MR	3I	63 - 11 × 140	71 B	B5R	4		67,5
	28,6	1 030	2,36	MR	3I	63 - 14 × 160	71 B		4		61,1
	33,6	880	1,5	MR	3I	50 - 11 × 140	71 B	B5R	4		52
	37,9	780	1,5	MR	3I	50 - 14 × 160	71 B		4		46,2
	37,2	795	2	MR	3I	50 - 14 × 160	71 C		6		30,9
	35,8	825	3,35	MR	3I	63 - 14 × 160	71 B		4		48,9
	46,1	645	2,12	MR	3I	50 - 14 × 160	71 B		4		38
	49,4	600	2,65	MR	3I	50 - 14 × 160	71 C		6		23,3
	47,1	640	1,8	MR	2I	50 - 14 × 160	71 C		6		24,4
	47,7	635	3,75	MR	2I	63 - 14 × 160	71 C		6		24,1
	47,7	635	3,75	MR	2I	63 - 19 × 200	80 A		6		24,1
	52	580	1,25	MR	2I	40 - 14 × 140	71 C	B5A	6		22,1
	56,6	525	3	MR	3I	50 - 14 × 160	71 B		4		30,9
	57,3	530	2,5	MR	2I	50 - 14 × 160	71 C		6		20,1
	65,5	460	1,32	MR	2I	40 - 14 × 140	71 B	B5A	4		26,7
	63,1	480	1,7	MR	2I	40 - 14 × 140	71 C	B5A	6		18,2
	75,2	395	4	MR	3I	50 - 14 × 160	71 B		4		23,3
	71,7	420	2,65	MR	2I	50 - 14 × 160	71 B		4		24,4
	79,2	380	1,9	MR	2I	40 - 14 × 140	71 B	B5A	4		22,1
	90,3	330	5,3	MR	3I	50 - 14 × 160	71 B		4		19,4
	87,2	345	3,75	MR	2I	50 - 14 × 160	71 B		4		20,1

1) Powers valid for continuous duty S1; **increase possible** for duty cycles S2 ... S10 (see ch. 1 «General specifications»): in which case M_2 increases and fs decreases.
2) For complete designation when ordering see ch. 2.
* Mounting position **B5R** (see ch. 1.2).
** Mounting position **B5A** (see ch. 1.2).

11 - Helical gearmotor selection tables

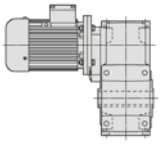

Motor power P_1 hp 1)	Output speed n_2 rpm	Output torque T_2 lb in	Service factor f_S							Gear ratio i
0,5	96,1	315	2,5	MR	2I	40 - 14 × 140	71 B	B5A	4	18,2
	109	280	2,12	MR	2I	40 - 14 × 140	71 B	B5A	4	16,1
	107	285	5,3	MR	2I	50 - 14 × 160	71 B		4	16,3
	132	230	3,15	MR	2I	40 - 14 × 140	71 B	B5A	4	13,3
	142	210	7,1	MR	2I	50 - 14 × 160	71 B		4	12,3
	160	190	4,25	MR	2I	40 - 14 × 140	71 B	B5A	4	11
	171	175	9,5	MR	2I	50 - 14 × 160	71 B		4	10,2
	206	145	5	MR	2I	40 - 14 × 140	71 B	B5A	4	8,48
	259	115	4	MR	2I	40 - 14 × 140	71 B	B5A	4	6,75
0,75	4,01	10 850	1,25	MR	4I	100 - 19 × 200	80 B		6	287
	5,02	8 660	1,4	MR	4I	100 - 19 × 200	80 A		4	349
	4,79	9 080	1,5	MR	4I	100 - 19 × 200	80 B		6	240
	6,1	7 130	1,9	MR	4I	100 - 19 × 200	80 A		4	287
	6,83	6 360	1,32	MR	4I	81 - 19 × 200	80 B		6	168
	7,29	5 970	2,24	MR	4I	100 - 19 × 200	80 A		4	240
	8,3	5 240	1,4	MR	4I	80 - 14 × 160	71 C		4	211
	8,3	5 240	1,6	MR	4I	81 - 14 × 160	71 C		4	211
	8,33	5 220	1,25	MR	4I	80 - 19 × 200	80 A		4	210
	8,33	5 220	1,4	MR	4I	81 - 19 × 200	80 A		4	210
	8,95	4 860	3,15	MR	4I	100 - 19 × 200	80 A		4	196
	10,5	4 230	2,8	MR	3I	100 - 19 × 200	80 B		6	110
	11	3 940	1,7	MR	4I	80 - 14 × 160	71 C		4	159
	11	3 940	2,12	MR	4I	81 - 14 × 160	71 C		4	159
	10,4	4 180	1,8	MR	4I	80 - 19 × 200	80 A		4	168
	10,4	4 180	2	MR	4I	81 - 19 × 200	80 A		4	168
	10,7	4 050	3,75	MR	4I	100 - 19 × 200	80 A		4	163
	12,8	3 480	3,55	MR	3I	100 - 19 × 200	80 B		6	90,1
	13,4	3 250	1,4	MR	4I	64 - 14 × 160	71 C		4	131
	12,6	3 440	2,12	MR	4I	80 - 14 × 160	71 C		4	139
	12,6	3 440	2,5	MR	4I	81 - 14 × 160	71 C		4	139
	13,8	3 140	2,12	MR	4I	80 - 19 × 200	80 A		4	127
	13,8	3 140	2,65	MR	4I	81 - 19 × 200	80 A		4	127
	14,1	3 090	5	MR	4I	100 - 19 × 200	80 A		4	124
	15,2	2 920	4,25	MR	3I	100 - 19 × 200	80 B		6	75,5
	16,9	2 570	1,32	MR	4I	63 - 14 × 160	71 C		4	103
	16,3	2 680	1,6	MR	4I	64 - 14 × 160	71 C		4	108
	15,8	2 750	2,65	MR	4I	80 - 19 × 200	80 A		4	111
	15,8	2 750	3,15	MR	4I	81 - 19 × 200	80 A		4	111
	17,7	2 510	2	MR	3I	80 - 14 × 160	71 C		4	98,8
	17,7	2 510	2,36	MR	3I	81 - 14 × 160	71 C		4	98,8
	20,6	2 110	1,7	MR	4I	63 - 14 × 160	71 C		4	84,9
	19,7	2 200	2	MR	4I	64 - 14 × 160	71 C		4	88,6
	23,5	1 890	1,25	MR	3I	63 - 19 × 200	80 B		6	48,9
	22,6	1 970	1,6	MR	3I	64 - 19 × 200	80 B		6	50,9
	21	2 070	3,55	MR	4I	80 - 19 × 200	80 A		4	83,2
	21,2	2 100	2,5	MR	3I	80 - 14 × 160	71 C		4	82,7
	21,2	2 100	2,8	MR	3I	81 - 14 × 160	71 C		4	82,7
	28,6	1 550	1,5	MR	3I	63 - 14 × 160	71 C		4	61,1
	27,5	1 610	2	MR	3I	64 - 14 × 160	71 C		4	63,5
	29,4	1 510	1,8	MR	3I	63 - 19 × 200	80 B		6	39,1
	28,2	1 570	2,24	MR	3I	64 - 19 × 200	80 B		6	40,8
	26,4	1 680	3,55	MR	3I	80 - 14 × 160	71 C		4	66,3
	26,5	1 680	3	MR	3I	80 - 19 × 200	80 A		4	66
	37,9	1 170	1	MR	3I	50 - 14 × 160	71 C		4	46,2
	35,8	1 240	2,24	MR	3I	63 - 14 × 160	71 C		4	48,9
	35,8	1 240	1,9	MR	3I	63 - 19 × 200	80 A		4	48,9
	34,4	1 290	2,5	MR	3I	64 - 19 × 200	80 A		4	50,9
	46,1	965	1,4	MR	3I	50 - 14 × 160	71 C		4	38
	47,1	965	1,18	MR	2I	50 - 19 × 160	80 B	B5A	6	24,4
	43,6	1 020	3	MR	3I	63 - 14 × 160	71 C		4	40,1
	44,7	995	2,8	MR	3I	63 - 19 × 200	80 A		4	39,1
	47,7	950	2,5	MR	2I	63 - 19 × 200	80 B		6	24,1

Motor power P_1 hp 1)	Output speed n_2 rpm	Output torque T_2 lb in	Service factor f_S							Gear ratio i
0,75	56,6	785	2	MR	3I	50 - 14 × 160	71 C		4	30,9
	57,3	790	1,7	MR	2I	50 - 19 × 160	80 B	B5A	6	20,1
	54,4	815	3,55	MR	3I	63 - 19 × 200	80 A		4	32,1
	59,7	760	3,55	MR	2I	63 - 19 × 200	80 B		6	19,3
	75,2	590	2,65	MR	3I	50 - 14 × 160	71 C		4	23,3
	71,7	635	1,8	MR	2I	50 - 14 × 160	71 C		4	24,4
	70,4	645	2,36	MR	2I	50 - 19 × 160	80 B	B5A	6	16,3
	72,6	625	3,75	MR	2I	63 - 14 × 160	71 C		4	24,1
	72,6	625	3,75	MR	2I	63 - 19 × 200	80 A		4	24,1
	79,2	575	1,25	MR	2I	40 - 14 × 140	71 C	B5A	4	22,1
	90,3	490	3,55	MR	3I	50 - 14 × 160	71 C		4	19,4
	87,2	520	2,5	MR	2I	50 - 14 × 160	71 C		4	20,1
	96,1	470	1,7	MR	2I	40 - 14 × 140	71 C	B5A	4	18,2
	109	415	1,4	MR	2I	40 - 14 × 140	71 C	B5A	4	16,1
	107	425	3,55	MR	2I	50 - 14 × 160	71 C		4	16,3
	132	345	2	MR	2I	40 - 14 × 140	71 C	B5A	4	13,3
	142	320	4,75	MR	2I	50 - 14 × 160	71 C		4	12,3
	160	285	2,8	MR	2I	40 - 14 × 140	71 C	B5A	4	11
	171	265	6,3	MR	2I	50 - 14 × 160	71 C		4	10,2
	206	220	3,35	MR	2I	40 - 14 × 140	71 C	B5A	4	8,48
	219	210	7,1	MR	2I	50 - 14 × 160	71 C		4	8,01
	259	175	2,65	MR	2I	40 - 14 × 140	71 C	B5A	4	6,75
	273	165	7,5	MR	2I	50 - 14 × 160	71 C		4	6,42
1	3,96	14 650	1,8	MR	4I	125 - 24 × 200	100 LA	B5R	6	290
	4,89	11 850	2,24	MR	4I	125 - 24 × 200	100 LA	B5R	6	235
	6,1	9 500	1,4	MR	4I	100 - 19 × 200	90 S	B5R	4	287
	5,88	9 860	1,6	MR	4I	100 - 19 × 200	80 C		6	196
	6	9 660	1,4	MR	4I	100 - 24 × 200	100 LA	B5R	6	192
	6,11	9 490	3,35	MR	4I	125 - 24 × 200	100 LA	B5R	6	188
	7,29	7 960	1,7	MR	4I	100 - 19 × 200	90 S	B5R	4	240
	7,06	8 210	1,9	MR	4I	100 - 19 × 200	80 C		6	163
	7,37	7 870	2	MR	4I	100 - 24 × 200	100 LA	B5R	6	156
	7,44	7 800	4	MR	4I	125 - 24 × 200	100 LA	B5R	6	155
	9,09	6 380	1,32	MR	4I	81 - 19 × 200	80 C		6	127
	8,95	6 480	2,36	MR	4I	100 - 19 × 200	90 S	B5R	4	196
	10,5	5 640	2	MR	3I	100 - 19 × 200	80 C		6	110
	9,01	6 430	4,75	MR	4I	125 - 24 × 200	100 LA	B5R	6	128
	10,4	5 580	1,32	MR	4I	80 - 19 × 200	90 S	B5R	4	168
	10,4	5 580	1,5	MR	4I	81 - 19 × 200	90 S	B5R	4	168
	10,7	5 390	2,8	MR	4I	100 - 19 × 200	90 S	B5R	4	163
	12,8	4 640	2,8	MR	3I	100 - 19 × 200	80 C		6	90,1
	13,8	4 190	1,6	MR	4I	80 - 19 × 200	90 S	B5R	4	127
	13,8	4 190	2	MR	4I	81 - 19 × 200	90 S	B5R	4	127
	14,1	4 120	3,75	MR	4I	100 - 19 × 200	90 S	B5R	4	124
	16	3 710	3	MR	3I	100 - 19 × 200	90 S	B5R	4	110
	15,8	3 660	2	MR	4I	80 - 19 × 200	90 S	B5R	4	111
	15,8	3 660	2,36	MR	4I	81 - 19 × 200	90 S	B5R	4	111
	17,7	3 340	1,5	MR	3I	80 - 14 × 160	90 S	B5S	4	98,8
	17,7	3 340	1,8	MR	3I	81 - 14 × 160	90 S	B5S	4	98,8
	17,4	3 400	1,5	MR	3I	80 - 19 × 200	80 C		6	66
	17,4	3 400	1,7	MR	3I	81 - 19 × 200	80 C		6	66
	19,4	3 050	4	MR	3I	100 - 19 × 200	90 S	B5R	4	90,1
	19,1	3 100	4	MR	3I	100 - 24 × 200	100 LA	B5R	6	60,2
	22,6	2 620	1,18	MR	3I	64 - 19 × 200	80 C		6	50,9
	21	2 760	2,65	MR	4I	80 - 19 × 200	90 S	B5R	4	83,2
	21	2 760	3,15	MR	4I	81 - 19 × 200	90 S	B5R	4	83,2
	21,2	2 800	1,8	MR	3I	80 - 14 × 160	90 S	B5S	4	82,7
	21,2	2 800	2,12	MR	3I	81 - 14 × 160	90 S	B5S	4	82,7
	21,7	2 720	2,12	MR	3I	80 - 19 × 200	80 C		6	52,9
	21,7	2 720	2,5	MR	3I	81 - 19 × 200	80 C		6	52,9
	22,1	2 680	1,9	MR	3I	80 - 24 × 200	100 LA	B5R	6	52
	22,1	2 680	2,24	MR	3I	81 - 24 × 200	100 LA	B5R	6	52
	23,2	2 560	4,75	MR	3I	100 - 19 × 200	90 S	B5R	4	75,5

1) Powers valid for continuous duty S1; **increase possible** for duty cycles S2 ... S10 (see ch. 1 «General specifications»): in which case M_2 increases and f_S decreases.
2) For complete designation when ordering see ch. 2.
* Mounting position **B5R** (see ch. 1.2).
** Mounting position **B5A** (see ch. 1.2).

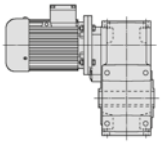

Motor power P_1 hp 1)	Output speed n_2 rpm	Output torque T_2 lb in	Service factor fs								Gear ratio i
1	28,6	2 070	1,18	MR	3I	63 - 14 × 160	90 S	B5S	4		61,1
	27,5	2 150	1,5	MR	3I	64 - 14 × 160	90 S	B5S	4		63,5
	29,4	2 020	1,4	MR	3I	63 - 19 × 200	80 C		6		39,1
	28,2	2 100	1,6	MR	3I	64 - 19 × 200	80 C		6		40,8
	26,4	2 240	2,65	MR	3I	80 - 14 × 160	90 S	B5S	4		66,3
	26,5	2 230	2,24	MR	3I	80 - 19 × 200	90 S	B5R	4		66
	26,5	2 230	2,65	MR	3I	81 - 19 × 200	90 S	B5R	4		66
	35,8	1 650	1,7	MR	3I	63 - 14 × 160	90 S	B5S	4		48,9
	35,8	1 660	1,4	MR	3I	63 - 19 × 200	90 S	B5R	4		48,9
	34,4	1 720	2	MR	3I	64 - 14 × 160	90 S	B5S	4		50,9
	34,4	1 720	1,8	MR	3I	64 - 19 × 200	90 S	B5R	4		50,9
	35,8	1 660	1,8	MR	3I	63 - 19 × 200	80 C		6		32,1
	34,3	1 730	2,24	MR	3I	64 - 19 × 200	80 C		6		33,5
	33,1	1 790	3,35	MR	3I	80 - 19 × 200	90 S	B5R	4		52,9
	44,7	1 320	2,12	MR	3I	63 - 19 × 200	90 S	B5R	4		39,1
	42,9	1 380	2,5	MR	3I	64 - 19 × 200	90 S	B5R	4		40,8
	41,6	1 420	2,36	MR	3I	64 - 19 × 200	80 C		6		27,6
	47,7	1 270	1,9	MR	2I	63 - 19 × 200	80 C		6		24,1
	45,9	1 320	2,36	MR	2I	64 - 19 × 200	80 C		6		25,1
	47,7	1 270	1,9	MR	2I	63 - 24 × 200	100 LA	B5R	6		24,1
	45,9	1 320	2,36	MR	2I	64 - 24 × 200	100 LA	B5R	6		25,1
	57,3	1 060	1,25	MR	2I	50 - 19 × 160	80 C	B5A	6		20,1
	54,4	1 090	2,65	MR	3I	63 - 19 × 200	90 S	B5R	4		32,1
	59,7	1 010	2,8	MR	2I	63 - 19 × 200	80 C		6		19,3
	59,7	1 010	2,8	MR	2I	63 - 24 × 200	100 LA	B5R	6		19,3
	71,7	845	1,32	MR	2I	50 - 19 × 160	90 S	B5B	4		24,4
	70,4	860	1,8	MR	2I	50 - 19 × 160	80 C	B5A	6		16,3
	66	900	3,15	MR	3I	63 - 19 × 200	90 S	B5R	4		26,5
	72,6	835	2,8	MR	2I	63 - 19 × 200	90 S	B5R	4		24,1
	87,2	695	1,9	MR	2I	50 - 19 × 160	90 S	B5B	4		20,1
	93,6	645	2,36	MR	2I	50 - 19 × 160	80 C	B5A	6		12,3
	80,3	740	4	MR	3I	63 - 19 × 200	90 S	B5R	4		21,8
	90,8	665	4	MR	2I	63 - 19 × 200	90 S	B5R	4		19,3
	96,1	630	1,25	MR	2I	40 - 14 × 140	71 D	B5A	4		18,2
	107	565	2,65	MR	2I	50 - 19 × 160	90 S	B5B	4		16,3
	132	460	1,5	MR	2I	40 - 14 × 140	71 D	B5A	4		13,3
	142	425	3,55	MR	2I	50 - 19 × 160	90 S	B5B	4		12,3
	160	380	2,12	MR	2I	40 - 14 × 140	71 D	B5A	4		11
	171	355	4,75	MR	2I	50 - 19 × 160	90 S	B5B	4		10,2
	206	295	2,5	MR	2I	40 - 14 × 140	71 D	B5A	4		8,48
	219	275	5,3	MR	2I	50 - 19 × 160	90 S	B5B	4		8,01
	259	235	2	MR	2I	40 - 14 × 140	71 D	B5A	4		6,75
	273	220	5,6	MR	2I	50 - 19 × 160	90 S	B5B	4		6,42
1,5	3,96	21 950	1,25	MR	4I	125 - 24 × 200	112 M	B5R	6		290
	4,89	17 800	1,5	MR	4I	125 - 24 × 200	112 M	B5R	6		235
	6,03	14 450	1,9	MR	4I	125 - 24 × 200	90 L		4		290
	6,11	14 250	2,12	MR	4I	125 - 24 × 200	112 M	B5R	6		188
	7,37	11 800	1,32	MR	4I	100 - 24 × 200	112 M	B5R	6		156
	7,44	11 700	2,24	MR	4I	125 - 24 × 200	90 L		4		235
	7,44	11 700	2,65	MR	4I	125 - 24 × 200	112 M	B5R	6		155
	8,95	9 720	1,6	MR	4I	100 - 19 × 200	80 C		4		196
	9,13	9 520	1,4	MR	4I	100 - 24 × 200	90 L		4		192
	9,3	9 350	3,35	MR	4I	125 - 24 × 200	90 L		4		188
	10,7	8 090	1,9	MR	4I	100 - 19 × 200	80 C		4		163
	11,2	7 750	2	MR	4I	100 - 24 × 200	90 L		4		156
	11,3	7 680	4	MR	4I	125 - 24 × 200	90 L		4		155
	12,4	7 180	3,35	MR	3I	125 - 24 × 200	112 M	B5R	6		92,9
	13,8	6 290	1,32	MR	4I	81 - 19 × 200	80 C		4		127
	14,1	6 190	2,5	MR	4I	100 - 19 × 200	80 C		4		124
	13,5	6 460	2,36	MR	4I	100 - 24 × 200	90 L		4		130
	16	5 560	2	MR	3I	100 - 19 × 200	80 C		4		110
	15,7	5 660	2	MR	3I	100 - 24 × 200	112 M	B5R	6		73,2
	13,7	6 340	5	MR	4I	125 - 24 × 200	90 L		4		128
	15,3	5 820	4	MR	3I	125 - 24 × 200	112 M	B5R	6		75,3

Motor power P_1 hp 1)	Output speed n_2 rpm	Output torque T_2 lb in	Service factor fs								Gear ratio i
1,5	15,8	5 500	1,32	MR	4I	80 - 19 × 200	80 C		4		111
	15,8	5 500	1,6	MR	4I	81 - 19 × 200	80 C		4		111
	17,6	4 930	3,15	MR	4I	100 - 24 × 200	90 L		4		99,3
	19,4	4 580	2,65	MR	3I	100 - 19 × 200	80 C		4		90,1
	19,1	4 650	2,65	MR	3I	100 - 24 × 200	112 M	B5R	6		60,2
	21	4 130	1,8	MR	4I	80 - 19 × 200	80 C		4		83,2
	21	4 130	2,12	MR	4I	81 - 19 × 200	80 C		4		83,2
	22,1	4 020	1,25	MR	3I	80 - 24 × 200	112 M	B5R	6		52
	22,1	4 020	1,5	MR	3I	81 - 24 × 200	112 M	B5R	6		52
	21,2	4 110	3,75	MR	4I	100 - 24 × 200	90 L		4		82,7
	23,2	3 830	3,15	MR	3I	100 - 19 × 200	80 C		4		75,5
	23,9	3 720	3	MR	3I	100 - 24 × 200	90 L		4		73,2
	26,5	3 350	1,5	MR	3I	80 - 19 × 200	80 C		4		66
	26,5	3 350	1,8	MR	3I	81 - 19 × 200	80 C		4		66
	27,6	3 220	1,8	MR	3I	80 - 24 × 200	112 M	B5R	6		41,7
	27,6	3 220	2,12	MR	3I	81 - 24 × 200	112 M	B5R	6		41,7
	28,5	3 120	4,5	MR	3I	100 - 19 × 200	80 C		4		61,5
	29,1	3 060	4	MR	3I	100 - 24 × 200	90 L		4		60,2
	35,8	2 480	0,95	MR	3I	63 - 19 × 200	80 C		4		48,9
	34,4	2 580	1,18	MR	3I	64 - 19 × 200	80 C		4		50,9
	33,1	2 690	2,24	MR	3I	80 - 19 × 200	80 C		4		52,9
	33,1	2 690	2,5	MR	3I	81 - 19 × 200	80 C		4		52,9
	33,7	2 640	1,9	MR	3I	80 - 24 × 200	90 L		4		52
	33,7	2 640	2,24	MR	3I	81 - 24 × 200	90 L		4		52
	44,7	1 990	1,4	MR	3I	63 - 19 × 200	80 C		4		39,1
	42,9	2 070	1,6	MR	3I	64 - 19 × 200	80 C		4		40,8
	47,7	1 900	1,25	MR	2I	63 - 24 × 200	112 M	B5R	6		24,1
	45,9	1 980	1,6	MR	2I	64 - 24 × 200	112 M	B5R	6		25,1
	44	2 020	3,35	MR	3I	80 - 19 × 200	80 C		4		39,8
	42	2 120	2,8	MR	3I	80 - 24 × 200	90 L		4		41,7
	44,2	2 050	2,5	MR	2I	80 - 24 × 200	112 M	B5R	6		26
	44,2	2 050	2,8	MR	2I	81 - 24 × 200	112 M	B5R	6		26
	54,4	1 630	1,8	MR	3I	63 - 19 × 200	80 C		4		32,1
	52,2	1 700	2,24	MR	3I	64 - 19 × 200	80 C		4		33,5
	59,7	1 520	1,8	MR	2I	63 - 24 × 200	112 M	B5R	6		19,3
	57,3	1 580	2,12	MR	2I	64 - 24 × 200	112 M	B5R	6		20,1
	55,9	1 590	4	MR	3I	80 - 24 × 200	90 L		4		31,3
	55,2	1 640	3,55	MR	2I	80 - 24 × 200	112 M	B5R	6		20,8
	66	1 350	2	MR	3I	63 - 19 × 200	80 C		4		26,5
	63,3	1 400	2,36	MR	3I	64 - 19 × 200	80 C		4		27,6
	72,6	1 250	1,9	MR	2I	63 - 19 × 200	80 C		4		24,1
	69,8	1 300	2,36	MR	2I	64 - 19 × 200	80 C		4		25,1
	72,6	1 250	1,9	MR	2I	63 - 24 × 200	90 L		4		24,1
	69,8	1 300	2,36	MR	2I	64 - 24 × 200	90 L		4		25,1
	72,6	1 250	2,36	MR	2I	63 - 24 × 200	112 M	B5R	6		15,8
	69,6	1 300	3	MR	2I	64 - 24 × 200	112 M	B5R	6		16,5
	67,3	1 350	3,75	MR	2I	80 - 24 × 200	90 L		4		26
	87,2	1 040	1,25	MR	2I	50 - 19 × 160	80 C	B5A	4		20,1
	80,3	1 110	2,65	MR	3I	63 - 19 × 200	80 C		4		21,8
	90,8	1 000	2,8	MR	2I	63 - 19 × 200	80 C		4		19,3
	90,8	1 000	2,8	MR	2I	63 - 24 × 200	90 L		4		19,3
	107	850	1,8	MR	2I	50 - 19 × 160	80 C	B5A	4		16,3
	111	820	3,55	MR	2I	63 - 19 × 200	80 C		4		15,8
	111	820	3,55	MR	2I	63 - 24 × 200	90 L		4		15,8
	142	635	2,36	MR	2I	50 - 19 × 160	80 C	B5A	4		12,3
	134	680	4	MR	2I	63 - 19 × 200	80 C		4		13,1
	134	680	4	MR	2I	63 - 24 × 200	90 L		4		13,1
	171	530	3,15	MR	2I	50 - 19 × 160	80 C	B5A	4		10,2
	163	555	5	MR	2I	63 - 19 × 200	80 C		4		10,7
	163	555	5	MR	2I	63 - 24 × 200	90 L		4		10,7
	219	415	3,55	MR	2I	50 - 19 × 160	80 C	B5A	4		8,01
	212	430	7,5	MR	2I	63 - 19 × 200	80 C		4		8,26
	212	430	7,5	MR	2I	63 - 24 × 200	90 L		4		8,26
	273	335	3,75	MR	2I	50 - 19 × 160	80 C	B5A	4		6,42
	268	340	7,5	MR	2I	63 - 19 × 200	80 C		4		6,53
	268	340	7,5	MR	2I	63 - 24 × 200	90 L		4		6,53

1) Powers valid for continuous duty S1; **increase possible** for duty cycles S2 ... S10 (see ch. 1 «General specifications»): in which case M_2 increases and fs decreases.
2) For complete designation when ordering see ch. 2.
* Mounting position **B5R** (see ch. 1.2).
** Mounting position **B5A** (see ch. 1.2).

11 - Helical gearmotor selection tables

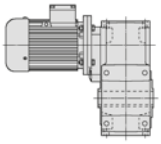

Motor power P_1 hp 1)	Output speed n_2 rpm	Output torque T_2 lb in	Service factor f_S							Gear ratio i
2	6,03	19 250	1,4	MR	4I 125 - 24 × 200	90 LB		4		290
	6,11	19 000	1,6	MR	4I 125 - 24 × 200	90 LC		6		188
	6,02	19 250	1,4	MR	4I 125 - 28 × 250	112 MB		6		191
	7,44	15 600	1,7	MR	4I 125 - 24 × 200	90 LB		4		235
	7,44	15 600	2	MR	4I 125 - 24 × 200	90 LC		6		155
	7,53	15 400	2	MR	4I 125 - 28 × 250	112 MB		6		153
	9,3	12 450	2,5	MR	4I 125 - 24 × 200	90 LB		4		188
	9,38	12 650	2,8	MR	3I 140 - 28 × 250	112 MB		6		123
	11,2	10 350	1,5	MR	4I 100 - 24 × 200	90 LB		4		156
	11,3	10 250	3	MR	4I 125 - 24 × 200	90 LB		4		155
	12,4	9 570	2,5	MR	3I 125 - 24 × 200	90 LC		6		92,9
	11,5	10 300	4,25	MR	3I 140 - 28 × 250	112 MB		6		100
	12,9	9 210	4,75	MR	3I 140 - 28 × 250	112 MB		6		89,4
	13,5	8 610	1,8	MR	4I 100 - 24 × 200	90 LB		4		130
	16	7 420	1,5	MR	3I 100 - 19 × 200	90 LB	B5R	4		110
	15,7	7 540	1,5	MR	3I 100 - 24 × 200	90 LC		6		73,2
	13,7	8 460	3,75	MR	4I 125 - 24 × 200	90 LB		4		128
	15,3	7 760	3	MR	3I 125 - 24 × 200	90 LC		6		75,3
	15,3	7 760	3	MR	3I 125 - 28 × 250	112 MB		6		75,3
	17,6	6 580	2,36	MR	4I 100 - 24 × 200	90 LB		4		99,3
	19,4	6 100	2	MR	3I 100 - 19 × 200	90 LB	B5R	4		90,1
	19,1	6 200	2	MR	3I 100 - 24 × 200	90 LC		6		60,2
	19,9	5 940	1,9	MR	3I 100 - 28 × 250	112 MB		6		57,7
	18,8	6 290	3,75	MR	3I 125 - 24 × 200	90 LB		4		92,9
	22,1	5 360	1,12	MR	3I 81 - 24 × 200	90 LC		6		52
	21,2	5 480	2,8	MR	4I 100 - 24 × 200	90 LB		4		82,7
	23,2	5 110	2,36	MR	3I 100 - 19 × 200	90 LB	B5R	4		75,5
	23,9	4 960	2,24	MR	3I 100 - 24 × 200	90 LB		4		73,2
	23,5	5 050	2,8	MR	3I 100 - 24 × 200	90 LC		6		49
	24,2	4 890	2,5	MR	3I 100 - 28 × 250	112 MB		6		47,4
	23,2	5 100	4,5	MR	3I 125 - 24 × 200	90 LB		4		75,3
	26,5	4 470	1,12	MR	3I 80 - 19 × 200	90 LB	B5R	4		66
	26,5	4 470	1,32	MR	3I 81 - 19 × 200	90 LB	B5R	4		66
	27,6	4 290	1,4	MR	3I 80 - 24 × 200	90 LC		6		41,7
	27,6	4 290	1,6	MR	3I 81 - 24 × 200	90 LC		6		41,7
	29,1	4 080	3	MR	3I 100 - 24 × 200	90 LB		4		60,2
	33,1	3 580	1,7	MR	3I 80 - 19 × 200	90 LB	B5R	4		52,9
	33,7	3 520	1,5	MR	3I 80 - 24 × 200	90 LB		4		52
	33,1	3 580	1,9	MR	3I 81 - 19 × 200	90 LB	B5R	4		52,9
	33,7	3 520	1,7	MR	3I 81 - 24 × 200	90 LB		4		52
	36,7	3 230	2	MR	3I 80 - 24 × 200	90 LC		6		31,3
	36,7	3 230	2,5	MR	3I 81 - 24 × 200	90 LC		6		31,3
	35,7	3 320	4,25	MR	3I 100 - 24 × 200	90 LB		4		49
	39,9	3 030	3,55	MR	2I 100 - 24 × 200	90 LC		6		28,8
	39,9	3 030	3,55	MR	2I 100 - 28 × 250	112 MB		6		28,8
	44,7	2 650	1,06	MR	3I 63 - 19 × 200	90 LB	B5R	4		39,1
	42,9	2 760	1,25	MR	3I 64 - 19 × 200	90 LB	B5R	4		40,8
	45,9	2 640	1,18	MR	2I 64 - 24 × 200	90 LC		6		25,1
	42	2 820	2,12	MR	3I 80 - 24 × 200	90 LB		4		41,7
	42	2 820	2,36	MR	3I 81 - 24 × 200	90 LB		4		41,7
	44,2	2 740	1,9	MR	2I 80 - 24 × 200	90 LC		6		26
	44,2	2 740	2,12	MR	2I 81 - 24 × 200	90 LC		6		26
	44,2	2 740	1,9	MR	2I 80 - 28 × 250	112 MB		6		26
	44,2	2 740	2,12	MR	2I 81 - 28 × 250	112 MB		6		26
	42,9	2 760	5,6	MR	3I 100 - 24 × 200	90 LB		4		40,8
	48,5	2 500	4,75	MR	2I 100 - 28 × 250	112 MB		6		23,7
	54,4	2 180	1,32	MR	3I 63 - 19 × 200	90 LB	B5R	4		32,1
	52,2	2 270	1,7	MR	3I 64 - 19 × 200	90 LB	B5R	4		33,5
	59,7	2 030	1,4	MR	2I 63 - 24 × 200	90 LC		6		19,3
	57,3	2 110	1,6	MR	2I 64 - 24 × 200	90 LC		6		20,1
	55,9	2 120	3,15	MR	3I 80 - 24 × 200	90 LB		4		31,3
	55,2	2 190	2,65	MR	2I 80 - 24 × 200	90 LC		6		20,8
	55,2	2 190	2,65	MR	2I 80 - 28 × 250	112 MB		6		20,8

Motor power P_1 hp 1)	Output speed n_2 rpm	Output torque T_2 lb in	Service factor f_S							Gear ratio i
2	66	1 800	1,5	MR	3I 63 - 19 × 200	90 LB	B5R	4		26,5
	63,3	1 870	1,8	MR	3I 64 - 19 × 200	90 LB	B5R	4		27,6
	72,6	1 670	1,4	MR	2I 63 - 24 × 200	90 LB		4		24,1
	69,8	1 730	1,8	MR	2I 64 - 24 × 200	90 LB		4		25,1
	72,6	1 670	1,8	MR	2I 63 - 24 × 200	90 LC		6		15,8
	69,6	1 740	2,24	MR	2I 64 - 24 × 200	90 LC		6		16,5
	63,9	1 850	3,15	MR	3I 80 - 24 × 200	90 LB		4		27,4
	67,3	1 800	2,8	MR	2I 80 - 24 × 200	90 LB		4		26
	80,3	1 480	2	MR	3I 63 - 19 × 200	90 LB	B5R	4		21,8
	77	1 540	2,5	MR	3I 64 - 19 × 200	90 LB	B5R	4		22,7
	90,8	1 330	2	MR	2I 63 - 24 × 200	90 LB		4		19,3
	87,2	1 390	2,36	MR	2I 64 - 24 × 200	90 LB		4		20,1
	85	1 390	4,75	MR	3I 80 - 24 × 200	90 LB		4		20,6
	84	1 440	4	MR	2I 80 - 24 × 200	90 LB		4		20,8
	111	1 090	2,65	MR	2I 63 - 24 × 200	90 LB		4		15,8
	112	1 080	5,3	MR	2I 80 - 24 × 200	90 LB		4		15,7
	134	905	3	MR	2I 63 - 24 × 200	90 LB		4		13,1
	128	945	6	MR	2I 80 - 24 × 200	90 LB		4		13,7
	163	740	3,75	MR	2I 63 - 24 × 200	90 LB		4		10,7
	212	570	5,6	MR	2I 63 - 24 × 200	90 LB		4		8,26
	268	450	5,6	MR	2I 63 - 24 × 200	90 LB		4		6,53
2,5	7,44	19 500	1,4	MR	4I 125 - 24 × 200	90 LB	S3 70%	4		235
	7,53	19 250	1,6	MR	4I 125 - 28 × 250	100 LB		6		153
	9,3	15 600	2	MR	4I 125 - 24 × 200	90 LB	S3 70%	4		188
	9,38	15 800	2,24	MR	3I 140 - 28 × 250	100 LB		6		123
	9,02	16 450	3,35	MR	3I 160 - 28 × 250	100 LB		6		128
	11,3	12 800	2,36	MR	4I 125 - 24 × 200	90 LB	S3 70%	4		155
	11,5	12 900	3,35	MR	3I 140 - 28 × 250	100 LB		6		100
	12,9	11 500	3,75	MR	3I 140 - 28 × 250	100 LB		6		89,4
	13,5	10 750	1,4	MR	4I 100 - 24 × 200	90 LB	S3 70%	4		130
	16	9 270	1,18	MR	3I 100 - 19 × 200	90 LB	S3 70% B5R	4		110
	13,7	10 550	3	MR	4I 125 - 24 × 200	90 LB	S3 70%	4		128
	15,3	9 700	2,5	MR	3I 125 - 28 × 250	100 LB		6		75,3
	14,1	10 500	4	MR	3I 140 - 28 × 250	100 LB		6		81,4
	17,6	8 220	1,9	MR	4I 100 - 24 × 200	90 LB	S3 70%	4		99,3
	19,4	7 630	1,6	MR	3I 100 - 19 × 200	90 LB	S3 70% B5R	4		90,1
	19,9	7 430	1,5	MR	3I 100 - 28 × 250	100 LB		6		57,7
	18,8	7 860	3	MR	3I 125 - 24 × 200	90 LB	S3 70%	4		92,9
	18,8	7 870	3	MR	3I 125 - 28 × 250	100 LB		6		61,1
	21,2	6 850	2,24	MR	4I 100 - 24 × 200	90 LB	S3 70%	4		82,7
	23,2	6 390	1,9	MR	3I 100 - 19 × 200	90 LB	S3 70% B5R	4		75,5
	23,9	6 190	1,8	MR	3I 100 - 24 × 200	90 LB	S3 70%	4		73,2
	24,2	6 110	2	MR	3I 100 - 28 × 250	100 LB		6		47,4
	23,2	6 370	3,75	MR	3I 125 - 24 × 200	90 LB	S3 70%	4		75,3
	23,5	6 290	4,5	MR	3I 125 - 28 × 250	100 LB		6		48,9
	26,5	5 590	1,06	MR	3I 81 - 19 × 200	90 LB	S3 70% B5R	4		66
	29,1	5 100	2,36	MR	3I 100 - 24 × 200	90 LB	S3 70%	4		60,2
	29,8	4 970	2,8	MR	3I 100 - 28 × 250	100 LB		6		38,6
	29,1	5 100	5,3	MR	3I 125 - 24 × 200	90 LB	S3 70%	4		60,2
	33,1	4 480	1,32	MR	3I 80 - 19 × 200	90 LB	S3 70% B5R	4		52,9
	33,7	4 400	1,18	MR	3I 80 - 24 × 200	90 LB	S3 70%	4		52
	33,1	4 480	1,5	MR	3I 81 - 19 × 200	90 LB	S3 70% B5R	4		52,9
	33,7	4 400	1,32	MR	3I 81 - 24 × 200	90 LB	S3 70%	4		52
	35,7	4 150	3,35	MR	3I 100 - 24 × 200	90 LB	S3 70%	4		49
	39,9	3 790	2,8	MR	2I 100 - 28 × 250	100 LB		6		28,8
	42	3 530	1,7	MR	3I 80 - 24 × 200	90 LB	S3 70%	4		41,7
	42	3 530	1,9	MR	3I 81 - 24 × 200	90 LB	S3 70%	4		41,7
	44,2	3 420	1,5	MR	2I 80 - 28 × 250	100 LB		6		26
	44,2	3 420	1,7	MR	2I 81 - 28 × 250	100 LB		6		26
	42,9	3 460	4,5	MR	3I 100 - 24 × 200	90 LB	S3 70%	4		40,8
	48,5	3 120	3,75	MR	2I 100 - 28 × 250	100 LB		6		23,7
	55,9	2 650	2,5	MR	3I 80 - 24 × 200	90 LB	S3 70%	4		31,3
	55,9	2 650	3	MR	3I 81 - 24 × 200	90 LB	S3 70%	4		31,3
	55,2	2 740	2,12	MR	2I 80 - 28 × 250	100 LB		6		20,8
	55,2	2 740	2,5	MR	2I 81 - 28 × 250	100 LB		6		20,8

1) Powers valid for continuous duty S1; **increase possible** for duty cycles S2 ... S10 (see ch. 1 «General specifications»): in which case M_2 increases and f_S decreases.
2) For complete designation when ordering see ch. 2.
* Mounting position **B5R** (see ch. 1.2)

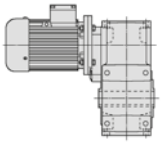

Motor power P_1 hp 1)	Output speed n_2 rpm	Output torque T_2 lb in	Service factor f_S								Gear ratio i
2,5	72,6	2 080	1,12	MR	2I	63 - 24 × 200	90 LB	S3 70%		4	24,1
	69,8	2 170	1,4	MR	2I	64 - 24 × 200	90 LB	S3 70%		4	25,1
	63,9	2 320	2,5	MR	3I	80 - 24 × 200	90 LB	S3 70%		4	27,4
	63,9	2 320	3	MR	3I	81 - 24 × 200	90 LB	S3 70%		4	27,4
	67,3	2 250	2,24	MR	2I	80 - 24 × 200	90 LB	S3 70%		4	26
	67,3	2 250	2,65	MR	2I	81 - 24 × 200	90 LB	S3 70%		4	26
	90,8	1 670	1,6	MR	2I	63 - 24 × 200	90 LB	S3 70%		4	19,3
	87,2	1 740	1,9	MR	2I	64 - 24 × 200	90 LB	S3 70%		4	20,1
	85	1 740	3,75	MR	3I	80 - 24 × 200	90 LB	S3 70%		4	20,6
	84	1 800	3,15	MR	2I	80 - 24 × 200	90 LB	S3 70%		4	20,8
	111	1 370	2,12	MR	2I	63 - 24 × 200	90 LB	S3 70%		4	15,8
	106	1 430	2,65	MR	2I	64 - 24 × 200	90 LB	S3 70%		4	16,5
	112	1 350	4,25	MR	2I	80 - 24 × 200	90 LB	S3 70%		4	15,7
	134	1 130	2,36	MR	2I	63 - 24 × 200	90 LB	S3 70%		4	13,1
	128	1 180	4,75	MR	2I	80 - 24 × 200	90 LB	S3 70%		4	13,7
	163	930	3	MR	2I	63 - 24 × 200	90 LB	S3 70%		4	10,7
	170	890	6,3	MR	2I	80 - 24 × 200	90 LB	S3 70%		4	10,3
	212	715	4,5	MR	2I	63 - 24 × 200	90 LB	S3 70%		4	8,26
	268	565	4,5	MR	2I	63 - 24 × 200	90 LB	S3 70%		4	6,53
3	7,53	23 100	1,32	MR	4I	125 - 28 × 250	132 S		B5R	6	153
	9,3	18 700	1,7	MR	4I	125 - 24 × 200	90 LC			4	188
	9,17	19 000	1,4	MR	4I	125 - 28 × 250	112 MA			4	191
	9,38	18 950	1,9	MR	3I	140 - 28 × 250	132 S		B5R	6	123
	9,02	19 700	2,8	MR	3I	160 - 28 × 250	132 S		B5R	6	128
	8,75	20 300	4	MR	3I	180 - 28 × 250	132 S		B5R	6	131
	11,3	15 350	2	MR	4I	125 - 24 × 200	90 LC			4	155
	11,5	15 200	2	MR	4I	125 - 28 × 250	112 MA			4	153
	11,5	15 450	2,8	MR	3I	140 - 28 × 250	132 S		B5R	6	100
	10,7	16 550	4	MR	3I	160 - 28 × 250	132 S		B5R	6	107
	12,9	13 800	3,15	MR	3I	140 - 28 × 250	132 S		B5R	6	89,4
	13,5	12 900	1,18	MR	4I	100 - 24 × 200	90 LC			4	130
	13,7	12 700	2,5	MR	4I	125 - 24 × 200	90 LC			4	128
	14	12 450	2,5	MR	4I	125 - 28 × 250	112 MA			4	125
	15,3	11 650	2	MR	3I	125 - 28 × 250	132 S		B5R	6	75,3
	14,3	12 450	2,65	MR	3I	140 - 28 × 250	112 MA			4	123
	17,6	9 870	1,6	MR	4I	100 - 24 × 200	90 LC			4	99,3
	19,4	9 150	1,32	MR	3I	100 - 19 × 200	90 LC		B5R	4	90,1
	19,9	8 910	1,25	MR	3I	100 - 28 × 250	132 S		B5R	6	57,7
	16,9	10 300	3	MR	4I	125 - 28 × 250	112 MA			4	104
	18,8	9 440	2,5	MR	3I	125 - 24 × 200	90 LC			4	92,9
	18,8	9 440	2,5	MR	3I	125 - 28 × 250	132 S		B5R	6	61,1
	17,5	10 150	4	MR	3I	140 - 28 × 250	112 MA			4	100
	19,6	9 080	4,75	MR	3I	140 - 28 × 250	112 MA			4	89,4
	21,2	8 220	1,9	MR	4I	100 - 24 × 200	90 LC			4	82,7
	23,2	7 670	1,6	MR	3I	100 - 19 × 200	90 LC		B5R	4	75,5
	23,9	7 430	1,5	MR	3I	100 - 24 × 200	90 LC			4	73,2
	24,2	7 330	1,7	MR	3I	100 - 28 × 250	132 S		B5R	6	47,4
	23,2	7 650	3	MR	3I	125 - 28 × 250	112 MA			4	75,3
	28,5	6 240	2,24	MR	3I	100 - 19 × 200	90 LC		B5R	4	61,5
	29,1	6 120	2	MR	3I	100 - 24 × 200	90 LC			4	60,2
	30,3	5 860	1,9	MR	3I	100 - 28 × 250	112 MA			4	57,7
	29,8	5 970	2,36	MR	3I	100 - 28 × 250	132 S		B5R	6	38,6
	28,6	6 200	3,75	MR	3I	125 - 28 × 250	112 MA			4	61,1
	33,1	5 370	1,12	MR	3I	80 - 19 × 200	90 LC		B5R	4	52,9
	33,7	5 280	0,95	MR	3I	80 - 24 × 200	90 LC			4	52
	33,1	5 370	1,25	MR	3I	81 - 19 × 200	90 LC		B5R	4	52,9
	33,7	5 280	1,12	MR	3I	81 - 24 × 200	90 LC			4	52
	35,7	4 980	2,8	MR	3I	100 - 24 × 200	90 LC			4	49
	36,9	4 820	2,5	MR	3I	100 - 28 × 250	112 MA			4	47,4
	35,8	4 970	3,15	MR	3I	100 - 28 × 250	132 S		B5R	6	32,2
	39,9	4 550	2,36	MR	2I	100 - 28 × 250	132 S		B5R	6	28,8

Motor power P_1 hp 1)	Output speed n_2 rpm	Output torque T_2 lb in	Service factor f_S								Gear ratio i
3	42	4 230	1,4	MR	3I	80 - 24 × 200	90 LC			4	41,7
	42	4 230	1,6	MR	3I	81 - 24 × 200	90 LC			4	41,7
	44,2	4 100	1,25	MR	2I	80 - 28 × 250	132 S		B5R	6	26
	44,2	4 100	1,4	MR	2I	81 - 28 × 250	132 S		B5R	6	26
	45,3	3 920	3,55	MR	3I	100 - 28 × 250	112 MA			4	38,6
	48,5	3 740	3,15	MR	2I	100 - 28 × 250	132 S		B5R	6	23,7
	55,9	3 180	2	MR	3I	80 - 24 × 200	90 LC			4	31,3
	55,9	3 180	2,5	MR	3I	81 - 24 × 200	90 LC			4	31,3
	55,2	3 290	1,8	MR	2I	80 - 28 × 250	132 S		B5R	6	20,8
	55,2	3 290	2,12	MR	2I	81 - 28 × 250	132 S		B5R	6	20,8
	54,4	3 270	4,75	MR	3I	100 - 28 × 250	112 MA			4	32,2
	60,7	2 990	3,55	MR	2I	100 - 24 × 200	90 LC			4	28,8
	60,7	2 990	3,55	MR	2I	100 - 28 × 250	112 MA			4	28,8
	59,5	3 050	4,5	MR	2I	100 - 28 × 250	132 S		B5R	6	19,3
	69,8	2 600	1,18	MR	2I	64 - 24 × 200	90 LC			4	25,1
	63,9	2 780	2,12	MR	3I	80 - 24 × 200	90 LC			4	27,4
	63,9	2 780	2,5	MR	3I	81 - 24 × 200	90 LC			4	27,4
	67,3	2 700	1,9	MR	2I	80 - 24 × 200	90 LC			4	26
	67,3	2 700	2,12	MR	2I	81 - 24 × 200	90 LC			4	26
	67,3	2 700	1,9	MR	2I	80 - 28 × 250	112 MA			4	26
	67,3	2 700	2,12	MR	2I	81 - 28 × 250	112 MA			4	26
	73,4	2 470	2,36	MR	2I	80 - 28 × 250	132 S		B5R	6	15,7
	73,4	2 470	2,8	MR	2I	81 - 28 × 250	132 S		B5R	6	15,7
	71,2	2 500	5,6	MR	3I	100 - 28 × 250	112 MA			4	24,6
	73,8	2 460	4,75	MR	2I	100 - 24 × 200	90 LC			4	23,7
	73,8	2 460	4,75	MR	2I	100 - 28 × 250	112 MA			4	23,7
	90,8	2 000	1,4	MR	2I	63 - 24 × 200	90 LC			4	19,3
	87,2	2 080	1,6	MR	2I	64 - 24 × 200	90 LC			4	20,1
	85	2 090	3,15	MR	3I	80 - 24 × 200	90 LC			4	20,6
	84	2 160	2,65	MR	2I	80 - 24 × 200	90 LC			4	20,8
	84	2 160	2,65	MR	2I	80 - 28 × 250	112 MA			4	20,8
	85,5	2 080	7,1	MR	3I	100 - 28 × 250	112 MA			4	20,5
	111	1 640	1,8	MR	2I	63 - 24 × 200	90 LC			4	15,8
	106	1 710	2,24	MR	2I	64 - 24 × 200	90 LC			4	16,5
	112	1 620	3,55	MR	2I	80 - 24 × 200	90 LC			4	15,7
	112	1 620	3,55	MR	2I	80 - 28 × 250	112 MA			4	15,7
	134	1 360	2	MR	2I	63 - 24 × 200	90 LC			4	13,1
	129	1 410	2,36	MR	2I	64 - 24 × 200	90 LC			4	13,6
	128	1 420	4	MR	2I	80 - 24 × 200	90 LC			4	13,7
	128	1 420	4	MR	2I	80 - 28 × 250	112 MA			4	13,7
	163	1 110	2,5	MR	2I	63 - 24 × 200	90 LC			4	10,7
	156	1 160	3,15	MR	2I	64 - 24 × 200	90 LC			4	11,2
	170	1 070	5,3	MR	2I	80 - 28 × 250	112 MA			4	10,3
	212	855	3,75	MR	2I	63 - 24 × 200	90 LC			4	8,26
	219	830	4	MR	2I	64 - 24 × 200	90 LC			4	7,99
	218	835	6,7	MR	2I	80 - 28 × 250	112 MA			4	8,03
	268	680	3,75	MR	2I	63 - 24 × 200	90 LC			4	6,53
	255	710	4	MR	2I	64 - 24 × 200	90 LC			4	6,86
	273	665	7,5	MR	2I	80 - 28 × 250	112 MA			4	6,41
4	9,38	25 250	1,4	MR	3I	140 - 28 × 250	112 MC			6	123
	9,02	26 300	2,12	MR	3I	160 - 28 × 250	112 MC			6	128
	9,02	26 300	2,12	MR	3I	160 - 38 × 300	132 M			6	128
	8,75	27 100	3	MR	3I	180 - 38 × 300	132 M			6	131
	11,5	20 250	1,5	MR	4I	125 - 28 × 250	112 M			4	153
	11,5	20 600	2,12	MR	3I	140 - 28 × 250	112 MC			6	100
	10,7	22 050	3	MR	3I	160 - 28 × 250	112 MC			6	107
	10,7	22 050	3	MR	3I	160 - 38 × 300	132 M			6	107
	10,7	22 200	4	MR	3I	180 - 38 × 300	132 M			6	108
	12,9	18 400	2,36	MR	3I	140 - 28 × 250	112 MC			6	89,4
	12,3	19 300	3,55	MR	3I	160 - 28 × 250	112 MC			6	93,7
	12,3	19 300	3,55	MR	3I	160 - 38 × 300	132 M			6	93,7
	14	16 650	1,9	MR	4I	125 - 28 × 250	112 M			4	125
	15,3	15 500	1,5	MR	3I	125 - 28 × 250	112 MC			6	75,3
	14,3	16 600	2	MR	3I	140 - 28 × 250	112 M			4	123
	13,7	17 250	3	MR	3I	160 - 28 × 250	112 M			4	128

1) Powers valid for continuous duty S1; **increase possible** for duty cycles S2 ... S10 (see ch. 1 «General specifications»): in which case M_2 increases and f_S decreases.
2) For complete designation when ordering see ch. 2.
* Mounting position **B5R** (see ch. 1.2)

11 - Helical gearmotor selection tables

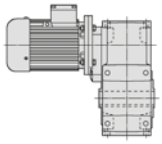

Motor power P_1 hp 1)	Output speed n_2 rpm	Output torque T_2 lb in	Service factor f_S							Gear ratio i
4	16,9	13 700	2,24	MR	4I 125 - 28 × 250	112 M		4		104
	18,8	12 600	1,9	MR	3I 125 - 24 × 200	112 M	B5R	4		92,9
	18,8	12 600	1,9	MR	3I 125 - 28 × 250	112 MC		6		61,1
	17,5	13 550	3	MR	3I 140 - 28 × 250	112 M		4		100
	19,6	12 100	3,55	MR	3I 140 - 28 × 250	112 M		4		89,4
	23,9	9 910	1,12	MR	3I 100 - 24 × 200	112 M	B5R	4		73,2
	24,2	9 780	1,25	MR	3I 100 - 28 × 250	112 MC		6		47,4
	20,6	11 250	2,8	MR	4I 125 - 28 × 250	112 M		4		85,1
	23,2	10 200	2,24	MR	3I 125 - 28 × 250	112 M		4		75,3
	23,5	10 050	2,8	MR	3I 125 - 28 × 250	112 MC		6		48,9
	21,5	11 050	3,75	MR	3I 140 - 28 × 250	112 M		4		81,4
	24,1	9 850	4,25	MR	3I 140 - 28 × 250	112 M		4		72,8
	30,3	7 810	1,4	MR	3I 100 - 28 × 250	112 M		4		57,7
	29,8	7 960	1,8	MR	3I 100 - 28 × 250	112 MC		6		38,6
	28,6	8 270	2,8	MR	3I 125 - 28 × 250	112 M		4		61,1
	36,9	6 420	1,9	MR	3I 100 - 28 × 250	112 M		4		47,4
	35,8	6 630	2,36	MR	3I 100 - 28 × 250	112 MC		6		32,2
	39,9	6 070	1,8	MR	2I 100 - 28 × 250	112 MC		6		28,8
	39,9	6 070	1,8	MR	2I 100 - 38 × 300	132 M		6		28,8
	35,8	6 620	4,25	MR	3I 125 - 28 × 250	112 M		4		48,9
	42	5 640	1,06	MR	3I 80 - 24 × 200	112 M	B5R	4		41,7
	42	5 640	1,18	MR	3I 81 - 24 × 200	112 M	B5R	4		41,7
	44,2	5 470	1,06	MR	2I 81 - 28 × 250	112 MC		6		26
	45,3	5 230	2,65	MR	3I 100 - 28 × 250	112 M		4		38,6
	48,5	4 990	2,36	MR	2I 100 - 28 × 250	112 MC		6		23,7
	48,5	4 990	2,36	MR	2I 100 - 38 × 300	132 M		6		23,7
	43,6	5 440	5,6	MR	3I 125 - 28 × 250	112 M		4		40,1
	47,7	5 070	4,5	MR	2I 125 - 28 × 250	112 MC		6		24,1
	47,7	5 070	4,5	MR	2I 125 - 38 × 300	132 M		6		24,1
	55,9	4 240	1,5	MR	3I 80 - 24 × 200	112 M	B5R	4		31,3
	55,9	4 240	1,8	MR	3I 81 - 24 × 200	112 M	B5R	4		31,3
	55,2	4 380	1,32	MR	2I 80 - 28 × 250	112 MC		6		20,8
	55,2	4 380	1,6	MR	2I 81 - 28 × 250	112 MC		6		20,8
	54,4	4 360	3,55	MR	3I 100 - 28 × 250	112 M		4		32,2
	60,7	3 990	2,65	MR	2I 100 - 28 × 250	112 M		4		28,8
	59,5	4 060	3,35	MR	2I 100 - 28 × 250	112 MC		6		19,3
	59,5	4 060	3,35	MR	2I 100 - 38 × 300	132 M		6		19,3
	63,9	3 710	1,6	MR	3I 80 - 24 × 200	112 M	B5R	4		27,4
	63,9	3 710	1,8	MR	3I 81 - 24 × 200	112 M	B5R	4		27,4
	67,3	3 600	1,4	MR	2I 80 - 28 × 250	112 M		4		26
	67,3	3 600	1,6	MR	2I 81 - 28 × 250	112 M		4		26
	73,4	3 300	1,8	MR	2I 80 - 28 × 250	112 MC		6		15,7
	73,4	3 300	2,12	MR	2I 81 - 28 × 250	112 MC		6		15,7
	71,2	3 330	4,25	MR	3I 100 - 28 × 250	112 M		4		24,6
	73,8	3 280	3,55	MR	2I 100 - 28 × 250	112 M		4		23,7
	87,2	2 780	1,18	MR	2I 64 - 24 × 200	112 M	B5R	4		20,1
	85	2 790	2,36	MR	3I 80 - 24 × 200	112 M	B5R	4		20,6
	85	2 790	2,8	MR	3I 81 - 24 × 200	112 M	B5R	4		20,6
	84	2 880	2	MR	2I 80 - 28 × 250	112 M		4		20,8
	84	2 880	2,36	MR	2I 81 - 28 × 250	112 M		4		20,8
	85,5	2 770	5,3	MR	3I 100 - 28 × 250	112 M		4		20,5
	90,6	2 670	5	MR	2I 100 - 28 × 250	112 M		4		19,3
	106	2 280	1,6	MR	2I 64 - 24 × 200	112 M	B5R	4		16,5
	112	2 170	2,65	MR	2I 80 - 28 × 250	112 M		4		15,7
	129	1 880	1,8	MR	2I 64 - 24 × 200	112 M	B5R	4		13,6
	128	1 890	3	MR	2I 80 - 28 × 250	112 M		4		13,7
	156	1 550	2,36	MR	2I 64 - 24 × 200	112 M	B5R	4		11,2
	170	1 420	4	MR	2I 80 - 28 × 250	112 M		4		10,3
	219	1 100	3	MR	2I 64 - 24 × 200	112 M	B5R	4		7,99
	218	1 110	5,3	MR	2I 80 - 28 × 250	112 M		4		8,03
	255	950	3	MR	2I 64 - 24 × 200	112 M	B5R	4		6,86
	273	885	5,6	MR	2I 80 - 28 × 250	112 M		4		6,41

Motor power P_1 hp 1)	Output speed n_2 rpm	Output torque T_2 lb in	Service factor f_S							Gear ratio i
5,4	9,02	35 500	1,6	MR	3I 160 - 38 × 300	132 MB		6		128
	8,75	36 550	2,24	MR	3I 180 - 38 × 300	132 MB		6		131
	9,65	33 150	3,35	MR	3I 200 - 38 × 300	132 MB		6		119
	10,7	29 800	2,24	MR	3I 160 - 38 × 300	132 MB		6		107
	10,7	29 950	3	MR	3I 180 - 38 × 300	132 MB		6		108
	12,3	26 050	2,65	MR	3I 160 - 38 × 300	132 MB		6		93,7
	12,3	25 950	3,15	MR	3I 180 - 38 × 300	132 MB		6		93,3
	14	22 450	1,4	MR	4I 125 - 28 × 250	112 MB		4		125
	14,3	22 400	1,5	MR	3I 140 - 28 × 250	112 MB		4		123
	13,7	23 300	2,24	MR	3I 160 - 28 × 250	112 MB		4		128
	13,4	23 850	2,65	MR	3I 160 - 38 × 300	132 MB		6		85,7
	13,3	24 000	3,15	MR	3I 180 - 28 × 250	112 MB		4		131
	16,9	18 550	1,7	MR	4I 125 - 28 × 250	112 MB		4		104
	18,8	17 000	1,4	MR	3I 125 - 24 × 200	112 MB	B5R	4		92,9
	17,5	18 300	2,24	MR	3I 140 - 28 × 250	112 MB		4		100
	16,3	19 600	3,15	MR	3I 160 - 28 × 250	112 MB		4		107
	19,6	16 350	2,65	MR	3I 140 - 28 × 250	112 MB		4		89,4
	18,7	17 100	4	MR	3I 160 - 28 × 250	112 MB		4		93,7
	23,2	13 750	1,7	MR	3I 125 - 28 × 250	112 MB		4		75,3
	21,5	14 900	2,8	MR	3I 140 - 28 × 250	112 MB		4		81,4
	24,1	13 300	3,15	MR	3I 140 - 28 × 250	112 MB		4		72,8
	29,1	11 000	1,12	MR	3I 100 - 24 × 200	112 MB	B5R	4		60,2
	28,6	11 150	2,12	MR	3I 125 - 28 × 250	112 MB		4		61,1
	28,2	11 350	3,55	MR	3I 140 - 28 × 250	112 MB		4		62
	31,6	10 100	4	MR	3I 140 - 28 × 250	112 MB		4		55,4
	35,7	8 960	1,6	MR	3I 100 - 24 × 200	112 MB	B5R	4		49
	36,9	8 670	1,4	MR	3I 100 - 28 × 250	112 MB		4		47,4
	39,9	8 190	1,32	MR	2I 100 - 38 × 300	132 MB		6		28,8
	35,8	8 930	3,15	MR	3I 125 - 28 × 250	112 MB		4		48,9
	45,3	7 060	2	MR	3I 100 - 28 × 250	112 MB		4		38,6
	48,5	6 740	1,8	MR	2I 100 - 38 × 300	132 MB		6		23,7
	43,6	7 340	4,25	MR	3I 125 - 28 × 250	112 MB		4		40,1
	47,7	6 840	3,35	MR	2I 125 - 38 × 300	132 MB		6		24,1
	54,4	5 880	2,65	MR	3I 100 - 28 × 250	112 MB		4		32,2
	60,7	5 380	2	MR	2I 100 - 28 × 250	112 MB		4		28,8
	59,5	5 490	2,5	MR	2I 100 - 38 × 300	132 MB		6		19,3
	52,8	6 060	4,5	MR	3I 125 - 28 × 250	112 MB		4		33,1
	59,7	5 480	4,75	MR	2I 125 - 38 × 300	132 MB		6		19,3
	67,3	4 850	1,06	MR	2I 80 - 28 × 250	112 MB		4		26
	67,3	4 850	1,18	MR	2I 81 - 28 × 250	112 MB		4		26
	71,2	4 490	3	MR	3I 100 - 28 × 250	112 MB		4		24,6
	73,8	4 430	2,65	MR	2I 100 - 28 × 250	112 MB		4		23,7
	72,6	4 500	5	MR	2I 125 - 28 × 250	112 MB		4		24,1
	84	3 890	1,5	MR	2I 80 - 28 × 250	112 MB		4		20,8
	84	3 890	1,7	MR	2I 81 - 28 × 250	112 MB		4		20,8
	85,5	3 740	3,75	MR	3I 100 - 28 × 250	112 MB		4		20,5
	90,6	3 610	3,75	MR	2I 100 - 28 × 250	112 MB		4		19,3
	112	2 920	2	MR	2I 80 - 28 × 250	112 MB		4		15,7
	112	2 920	2,36	MR	2I 81 - 28 × 250	112 MB		4		15,7
	109	3 000	4	MR	2I 100 - 28 × 250	112 MB		4		16,1
	128	2 560	2,24	MR	2I 80 - 28 × 250	112 MB		4		13,7
	128	2 560	2,65	MR	2I 81 - 28 × 250	112 MB		4		13,7
	142	2 290	5,6	MR	2I 100 - 28 × 250	112 MB		4		12,3
	170	1 920	3	MR	2I 80 - 28 × 250	112 MB		4		10,3
	170	1 920	3,55	MR	2I 81 - 28 × 250	112 MB		4		10,3
	171	1 910	6	MR	2I 100 - 28 × 250	112 MB		4		10,2
	218	1 500	3,75	MR	2I 80 - 28 × 250	112 MB		4		8,03
	273	1 200	4,25	MR	2I 80 - 28 × 250	112 MB		4		6,41
7,5	8,75	50 750	1,6	MR	3I 180 - 38 × 300	132 MB	S3 70%	6		131
	9,65	46 050	2,36	MR	3I 200 - 38 × 300	132 MB	S3 70%	6		119
	9,37	47 450	3,35	MR	3I 225 - 38 × 300	132 MB	S3 70%	6		123

1) Powers valid for continuous duty S1; **increase possible** for duty cycles S2 ... S10 (see ch. 1 «General specifications»): in which case M_2 increases and f_S decreases.
2) For complete designation when ordering see ch. 2.
* Mounting position **B5R** (see ch. 1.2).

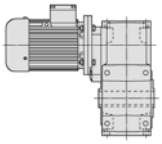

Motor power P_1 hp 1)	Output speed n_2 rpm	Output torque T_2 lb in	Service factor fs							Gear ratio i
7,5	10,7	41 400	1,6	MR	3I 160 - 38 × 300	132 MB	S3 70%	6		107
	10,7	41 600	2,12	MR	3I 180 - 38 × 300	132 MB	S3 70%	6		108
	11,5	38 650	3,35	MR	3I 200 - 38 × 300	132 MB	S3 70%	6		100
	12,3	36 200	1,9	MR	3I 160 - 38 × 300	132 MB	S3 70%	6		93,7
	12,3	36 050	2,24	MR	3I 180 - 38 × 300	132 MB	S3 70%	6		93,3
	13,3	33 400	4	MR	3I 200 - 38 × 300	132 MB	S3 70%	6		86,4
	14,3	31 150	1,06	MR	3I 140 - 28 × 250	112 MC		4		123
	15,1	29 350	1,12	MR	3I 140 - 38 × 300	132 MB	S3 70%	6		76
	13,7	32 400	1,6	MR	3I 160 - 28 × 250	112 MC		4		128
	13,7	32 400	1,6	MR	3I 160 - 38 × 300	132 M		4		128
	13,4	33 100	1,9	MR	3I 160 - 38 × 300	132 MB	S3 70%	6		85,7
	13,3	33 350	2,24	MR	3I 180 - 28 × 250	112 MC		4		131
	13,3	33 350	2,24	MR	3I 180 - 38 × 300	132 M		4		131
	14,7	30 250	3,55	MR	3I 200 - 38 × 300	132 M		4		119
	16,9	25 750	1,18	MR	4I 125 - 28 × 250	112 MC		4		104
	17,5	25 400	1,6	MR	3I 140 - 28 × 250	112 MC		4		100
	18,6	23 950	1,7	MR	3I 140 - 38 × 300	132 MB	S3 70%	6		62
	16,3	27 200	2,24	MR	3I 160 - 28 × 250	112 MC		4		107
	16,3	27 200	2,24	MR	3I 160 - 38 × 300	132 M		4		107
	16,3	27 350	3	MR	3I 180 - 38 × 300	132 M		4		108
	19,6	22 700	1,9	MR	3I 140 - 28 × 250	112 MC		4		89,4
	20,8	21 400	2	MR	3I 140 - 38 × 300	132 MB	S3 70%	6		55,4
	18,7	23 800	2,8	MR	3I 160 - 28 × 250	112 MC		4		93,7
	18,7	23 800	2,8	MR	3I 160 - 38 × 300	132 M		4		93,7
	18,8	23 700	3,35	MR	3I 180 - 38 × 300	132 M		4		93,3
	20,6	21 150	1,5	MR	4I 125 - 28 × 250	112 MC		4		85,1
	23,2	19 100	1,18	MR	3I 125 - 28 × 250	112 MC		4		75,3
	23,5	18 900	1,25	MR	3I 125 - 38 × 300	132 MB	S3 70%	6		48,9
	21,5	20 650	2	MR	3I 140 - 28 × 250	112 MC		4		81,4
	23	19 300	1,7	MR	3I 140 - 38 × 300	132 M		4		76
	20,4	21 750	2,8	MR	3I 160 - 28 × 250	112 MC		4		85,7
	20,4	21 750	2,8	MR	3I 160 - 38 × 300	132 M		4		85,7
	20,3	21 850	3,75	MR	3I 180 - 38 × 300	132 M		4		86,1
	24,1	18 450	2,24	MR	3I 140 - 28 × 250	112 MC		4		72,8
	23,4	19 050	3,55	MR	3I 160 - 38 × 300	132 M		4		74,9
	28,6	15 500	1,5	MR	3I 125 - 28 × 250	112 MC		4		61,1
	29,4	15 100	1,8	MR	3I 125 - 38 × 300	132 MB	S3 70%	6		39,1
	28,2	15 750	2,5	MR	3I 140 - 28 × 250	112 MC		4		62
	28,2	15 750	2,5	MR	3I 140 - 38 × 300	132 M		4		62
	27,6	16 100	3,75	MR	3I 160 - 38 × 300	132 M		4		63,5
	31,6	14 050	3	MR	3I 140 - 38 × 300	132 M		4		55,4
	35,8	12 400	2,24	MR	3I 125 - 28 × 250	112 MC		4		48,9
	35,8	12 400	1,9	MR	3I 125 - 38 × 300	132 M		4		48,9
	35,8	12 400	2,5	MR	3I 125 - 38 × 300	132 MB	S3 70%	6		32,1
	34,7	12 800	3,15	MR	3I 140 - 38 × 300	132 M		4		50,4
	38,8	11 450	3,75	MR	3I 140 - 38 × 300	132 M		4		45,1
	45,3	9 810	1,4	MR	3I 100 - 28 × 250	112 MC		4		38,6
	48,5	9 360	1,25	MR	2I 100 - 38 × 300	132 MB	S3 70%	6		23,7
	43,6	10 200	3	MR	3I 125 - 28 × 250	112 MC		4		40,1
	44,7	9 940	2,8	MR	3I 125 - 38 × 300	132 M		4		39,1
	47,7	9 510	2,36	MR	2I 125 - 38 × 300	132 MB	S3 70%	6		24,1
	54,4	8 170	1,9	MR	3I 100 - 28 × 250	112 MC		4		32,2
	60,7	7 480	1,4	MR	2I 100 - 28 × 250	112 MC		4		28,8
	60,7	7 480	1,4	MR	2I 100 - 38 × 300	132 M		4		28,8
	59,5	7 620	1,8	MR	2I 100 - 38 × 300	132 MB	S3 70%	6		19,3
	54,4	8 160	3,55	MR	3I 125 - 38 × 300	132 M		4		32,1
	59,7	7 600	3,35	MR	2I 125 - 38 × 300	132 MB	S3 70%	6		19,3
	71,2	6 240	2,24	MR	3I 100 - 28 × 250	112 MC		4		24,6
	73,8	6 150	1,9	MR	2I 100 - 28 × 250	112 MC		4		23,7
	73,8	6 150	1,9	MR	2I 100 - 38 × 300	132 M		4		23,7
	66	6 740	4	MR	3I 125 - 38 × 300	132 M		4		26,5
	72,6	6 250	3,55	MR	2I 125 - 28 × 250	112 MC		4		24,1
	72,6	6 250	3,55	MR	2I 125 - 38 × 300	132 M		4		24,1

Motor power P_1 hp 1)	Output speed n_2 rpm	Output torque T_2 lb in	Service factor fs							Gear ratio i
7,5	84	5 400	1,06	MR	2I 80 - 28 × 250	112 MC		4		20,8
	84	5 400	1,25	MR	2I 81 - 28 × 250	112 MC		4		20,8
	85,5	5 200	2,8	MR	3I 100 - 28 × 250	112 MC		4		20,5
	90,6	5 010	2,65	MR	2I 100 - 28 × 250	112 MC		4		19,3
	90,6	5 010	2,65	MR	2I 100 - 38 × 300	132 M		4		19,3
	80,3	5 530	5,3	MR	3I 125 - 38 × 300	132 M		4		21,8
	90,8	5 000	4,75	MR	2I 125 - 38 × 300	132 M		4		19,3
	112	4 060	1,4	MR	2I 80 - 28 × 250	112 MC		4		15,7
	112	4 060	1,7	MR	2I 81 - 28 × 250	112 MC		4		15,7
	109	4 170	2,8	MR	2I 100 - 28 × 250	112 MC		4		16,1
	109	4 170	2,8	MR	2I 100 - 38 × 300	132 M		4		16,1
	128	3 550	1,6	MR	2I 80 - 28 × 250	112 MC		4		13,7
	128	3 550	1,9	MR	2I 81 - 28 × 250	112 MC		4		13,7
	142	3 190	4	MR	2I 100 - 28 × 250	112 MC		4		12,3
	142	3 190	4	MR	2I 100 - 38 × 300	132 M		4		12,3
	170	2 670	2,12	MR	2I 80 - 28 × 250	112 MC		4		10,3
	170	2 670	2,5	MR	2I 81 - 28 × 250	112 MC		4		10,3
	171	2 650	4,5	MR	2I 100 - 38 × 300	132 M		4		10,2
	218	2 080	2,8	MR	2I 80 - 28 × 250	112 MC		4		8,03
	218	2 080	3,35	MR	2I 81 - 28 × 250	112 MC		4		8,03
	219	2 080	5,6	MR	2I 100 - 38 × 300	132 M		4		8,01
	273	1 660	3	MR	2I 80 - 28 × 250	112 MC		4		6,41
	273	1 660	3,35	MR	2I 81 - 28 × 250	112 MC		4		6,41
	273	1 660	6,3	MR	2I 100 - 38 × 300	132 M		4		6,42
10	9,65	61 400	1,8	MR	3I 200 - 38 × 300	132 MC		6		119
	9,65	61 400	1,8	MR	3I 200 - 42 × 350	160 M		6		119
	9,37	63 250	2,5	MR	3I 225 - 38 × 300	132 MC		6		123
	9,37	63 250	2,5	MR	3I 225 - 42 × 350	160 M		6		123
	10,7	55 450	1,6	MR	3I 180 - 38 × 300	132 MC		6		108
	11,5	51 550	2,5	MR	3I 200 - 38 × 300	132 MC		6		100
	11,5	51 550	2,5	MR	3I 200 - 42 × 350	160 M		6		100
	11,7	50 750	3,55	MR	3I 225 - 38 × 300	132 MC		6		98,5
	11,7	50 750	3,55	MR	3I 225 - 42 × 350	160 M		6		98,5
	12,3	48 250	1,4	MR	3I 160 - 38 × 300	132 MC		6		93,7
	12,3	48 050	1,7	MR	3I 180 - 38 × 300	132 MC		6		93,3
	13,3	44 550	3,15	MR	3I 200 - 38 × 300	132 MC		6		86,4
	13,3	44 550	3,15	MR	3I 200 - 42 × 350	160 M		6		86,4
	13	45 700	4,25	MR	3I 225 - 38 × 300	132 MC		6		88,8
	13	45 700	4,25	MR	3I 225 - 42 × 350	160 M		6		88,8
	13,7	43 200	1,18	MR	3I 160 - 38 × 300	132 MB		4		128
	13,4	44 150	1,4	MR	3I 160 - 38 × 300	132 MC		6		85,7
	13,3	44 500	1,7	MR	3I 180 - 38 × 300	132 MB		4		131
	14,7	40 350	2,65	MR	3I 200 - 38 × 300	132 MB		4		119
	14,3	41 550	3,55	MR	3I 225 - 38 × 300	132 MB		4		123
	18,6	31 900	1,32	MR	3I 140 - 38 × 300	132 MC		6		62
	16,3	36 250	1,7	MR	3I 160 - 38 × 300	132 MB		4		107
	16,3	36 450	2,24	MR	3I 180 - 38 × 300	132 MB		4		108
	17,5	33 850	3,55	MR	3I 200 - 38 × 300	132 MB		4		100
	20,8	28 500	1,5	MR	3I 140 - 38 × 300	132 MC		6		55,4
	18,7	31 700	2,12	MR	3I 160 - 38 × 300	132 MB		4		93,7
	18,8	31 600	2,5	MR	3I 180 - 38 × 300	132 MB		4		93,3
	20,2	29 250	4,5	MR	3I 200 - 38 × 300	132 MB		4		86,4
	23	25 700	1,25	MR	3I 140 - 38 × 300	132 MB		4		76
	22,8	26 000	1,6	MR	3I 140 - 38 × 300	132 MC		6		50,4
	20,4	29 000	2,12	MR	3I 160 - 38 × 300	132 MB		4		85,7
	20,3	29 150	2,8	MR	3I 180 - 38 × 300	132 MB		4		86,1
	25,5	23 200	1,8	MR	3I 140 - 38 × 300	132 MC		6		45,1
	23,4	25 350	2,65	MR	3I 160 - 38 × 300	132 MB		4		74,9
	23,5	25 250	3,55	MR	3I 180 - 38 × 300	132 MB		4		74,6
	28,6	20 700	1,12	MR	3I 125 - 28 × 250	132 MB	B5R	4		61,1
	29,4	20 150	1,4	MR	3I 125 - 38 × 300	132 MC		6		39,1
	28,2	20 950	1,9	MR	3I 140 - 38 × 300	132 MB		4		62
	27,6	21 500	2,8	MR	3I 160 - 38 × 300	132 MB		4		63,5

1) Powers valid for continuous duty S1; **increase possible** for duty cycles S2 ... S10 (see ch. 1 «General specifications»): in which case M_2 increases and fs decreases.
2) For complete designation when ordering see ch. 2.
* Mounting position **B5R** (see ch. 1.2)

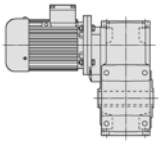

Motor power P_1 hp 1)	Output speed n_2 rpm	Output torque T_2 lb in	Service factor f_S								Gear ratio i
10	31,6	18 750	2,24	MR	3I 140 - 38 × 300	132 MB				4	55,4
	31,5	18 800	3,55	MR	3I 160 - 38 × 300	132 MB				4	55,5
	35,8	16 550	1,7	MR	3I 125 - 28 × 250	132 MB			BSR	4	48,9
	35,8	16 550	1,4	MR	3I 125 - 38 × 300	132 MB				4	48,9
	35,8	16 550	1,9	MR	3I 125 - 38 × 300	132 MC				6	32,1
	34,7	17 100	2,36	MR	3I 140 - 38 × 300	132 MB				4	50,4
	34,5	17 200	3,55	MR	3I 160 - 38 × 300	132 MB				4	50,8
	38,8	15 250	2,8	MR	3I 140 - 38 × 300	132 MB				4	45,1
	44,7	13 250	2,12	MR	3I 125 - 38 × 300	132 MB				4	39,1
	47,7	12 650	1,8	MR	2I 125 - 38 × 300	132 MC				6	24,1
	47,7	12 650	1,8	MR	2I 125 - 42 × 350	160 M				6	24,1
	45,3	13 100	3,15	MR	3I 140 - 38 × 300	132 MB				4	38,7
	46,6	12 700	3,15	MR	3I 140 - 38 × 300	132 MB				4	37,5
	59,5	10 150	1,4	MR	2I 100 - 38 × 300	132 MC				6	19,3
	54,4	10 900	2,8	MR	3I 125 - 38 × 300	132 MB				4	32,1
	59,7	10 150	2,5	MR	2I 125 - 38 × 300	132 MC				6	19,3
	59,7	10 150	2,5	MR	2I 125 - 42 × 350	160 M				6	19,3
	54,4	10 900	3,35	MR	3I 140 - 38 × 300	132 MB				4	32,2
	60,2	9 850	3,35	MR	3I 140 - 38 × 300	132 MB				4	29,1
	73,8	8 200	1,4	MR	2I 100 - 38 × 300	132 MB				4	23,7
	66	8 980	3	MR	3I 125 - 38 × 300	132 MB				4	26,5
	72,6	8 330	2,65	MR	2I 125 - 38 × 300	132 MB				4	24,1
	72,6	8 330	3,55	MR	2I 140 - 38 × 300	132 MB				4	24,1
	90,6	6 680	2	MR	2I 100 - 38 × 300	132 MB				4	19,3
	80,3	7 380	4	MR	3I 125 - 38 × 300	132 MB				4	21,8
	90,8	6 660	3,55	MR	2I 125 - 38 × 300	132 MB				4	19,3
	109	5 560	2,12	MR	2I 100 - 38 × 300	132 MB				4	16,1
	111	5 470	4,25	MR	2I 125 - 38 × 300	132 MB				4	15,8
	142	4 250	3	MR	2I 100 - 38 × 300	132 MB				4	12,3
	134	4 520	5,3	MR	2I 125 - 38 × 300	132 MB				4	13,1
	171	3 540	3,35	MR	2I 100 - 38 × 300	132 MB				4	10,2
	163	3 710	6,3	MR	2I 125 - 38 × 300	132 MB				4	10,7
	219	2 770	4,25	MR	2I 100 - 38 × 300	132 MB				4	8,01
	212	2 860	8	MR	2I 125 - 38 × 300	132 MB				4	8,26
	273	2 220	4,75	MR	2I 100 - 38 × 300	132 MB				4	6,42
	268	2 260	9	MR	2I 125 - 38 × 300	132 MB				4	6,53
12,4	13,3	55 150	1,4	MR	3I 180 - 38 × 300	132 MB	S3 70%			4	131
	14,7	50 000	2,12	MR	3I 200 - 38 × 300	132 MB	S3 70%			4	119
	14,3	51 550	3	MR	3I 225 - 38 × 300	132 MB	S3 70%			4	123
	16,3	44 950	1,4	MR	3I 160 - 38 × 300	132 MB	S3 70%			4	107
	16,3	45 200	1,8	MR	3I 180 - 38 × 300	132 MB	S3 70%			4	108
	17,5	42 000	3	MR	3I 200 - 38 × 300	132 MB	S3 70%			4	100
	18,7	39 300	1,7	MR	3I 160 - 38 × 300	132 MB	S3 70%			4	93,7
	18,8	39 150	2	MR	3I 180 - 38 × 300	132 MB	S3 70%			4	93,3
	20,2	36 300	3,55	MR	3I 200 - 38 × 300	132 MB	S3 70%			4	86,4
	23	31 900	1	MR	3I 140 - 38 × 300	132 MB	S3 70%			4	76
	20,4	35 950	1,7	MR	3I 160 - 38 × 300	132 MB	S3 70%			4	85,7
	20,3	36 150	2,24	MR	3I 180 - 38 × 300	132 MB	S3 70%			4	86,1
	20,8	35 250	3,35	MR	3I 200 - 38 × 300	132 MB	S3 70%			4	84
	23,4	31 450	2,12	MR	3I 160 - 38 × 300	132 MB	S3 70%			4	74,9
	23,5	31 300	2,8	MR	3I 180 - 38 × 300	132 MB	S3 70%			4	74,6
	28,2	26 000	1,6	MR	3I 140 - 38 × 300	132 MB	S3 70%			4	62
	27,6	26 650	2,24	MR	3I 160 - 38 × 300	132 MB	S3 70%			4	63,5
	27,4	26 800	3	MR	3I 180 - 38 × 300	132 MB	S3 70%			4	63,8
	31,6	23 250	1,8	MR	3I 140 - 38 × 300	132 MB	S3 70%			4	55,4
	31,5	23 300	2,8	MR	3I 160 - 38 × 300	132 MB	S3 70%			4	55,5
	31,7	23 200	3,35	MR	3I 180 - 38 × 300	132 MB	S3 70%			4	55,3
	35,8	20 550	1,12	MR	3I 125 - 38 × 300	132 MB	S3 70%			4	48,9
	34,7	21 200	1,9	MR	3I 140 - 38 × 300	132 MB	S3 70%			4	50,4
	34,5	21 300	2,8	MR	3I 160 - 38 × 300	132 MB	S3 70%			4	50,8
	34,3	21 400	3,75	MR	3I 180 - 38 × 300	132 MB	S3 70%			4	51

Motor power P_1 hp 1)	Output speed n_2 rpm	Output torque T_2 lb in	Service factor f_S								Gear ratio i
12,4	38,8	18 900	2,24	MR	3I 140 - 38 × 300	132 MB	S3 70%			4	45,1
	39,4	18 650	3,55	MR	3I 160 - 38 × 300	132 MB	S3 70%			4	44,4
	44,7	16 450	1,7	MR	3I 125 - 38 × 300	132 MB	S3 70%			4	39,1
	45,3	16 250	2,5	MR	3I 140 - 38 × 300	132 MB	S3 70%			4	38,7
	45,5	16 150	4	MR	3I 160 - 38 × 300	132 MB	S3 70%			4	38,5
	46,6	15 750	2,65	MR	3I 140 - 38 × 300	132 MB	S3 70%			4	37,5
	54,4	13 500	2,24	MR	3I 125 - 38 × 300	132 MB	S3 70%			4	32,1
	54,4	13 500	2,65	MR	3I 140 - 38 × 300	132 MB	S3 70%			4	32,2
	60,2	12 200	2,65	MR	3I 140 - 38 × 300	132 MB	S3 70%			4	29,1
	73,8	10 150	1,18	MR	2I 100 - 38 × 300	132 MB	S3 70%			4	23,7
	66	11 150	2,36	MR	3I 125 - 38 × 300	132 MB	S3 70%			4	26,5
	72,6	10 350	2,12	MR	2I 125 - 38 × 300	132 MB	S3 70%			4	24,1
	72,6	10 350	3	MR	2I 140 - 38 × 300	132 MB	S3 70%			4	24,1
	80,7	9 300	3,55	MR	2I 140 - 38 × 300	132 MB	S3 70%			4	21,7
	90,6	8 280	1,6	MR	2I 100 - 38 × 300	132 MB	S3 70%			4	19,3
	80,3	9 150	3,15	MR	3I 125 - 38 × 300	132 MB	S3 70%			4	21,8
	90,8	8 260	2,8	MR	2I 125 - 38 × 300	132 MB	S3 70%			4	19,3
	109	6 890	1,7	MR	2I 100 - 38 × 300	132 MB	S3 70%			4	16,1
	111	6 790	3,55	MR	2I 125 - 38 × 300	132 MB	S3 70%			4	15,8
	142	5 270	2,36	MR	2I 100 - 38 × 300	132 MB	S3 70%			4	12,3
	134	5 600	4,25	MR	2I 125 - 38 × 300	132 MB	S3 70%			4	13,1
	171	4 390	2,65	MR	2I 100 - 38 × 300	132 MB	S3 70%			4	10,2
	163	4 600	5	MR	2I 125 - 38 × 300	132 MB	S3 70%			4	10,7
	219	3 430	3,35	MR	2I 100 - 38 × 300	132 MB	S3 70%			4	8,01
	212	3 540	6,7	MR	2I 125 - 38 × 300	132 MB	S3 70%			4	8,26
	273	2 750	3,75	MR	2I 100 - 38 × 300	132 MB	S3 70%			4	6,42
	268	2 800	7,5	MR	2I 125 - 38 × 300	132 MB	S3 70%			4	6,53
15	9,65	92 100	1,18	MR	3I 200 - 42 × 350	160 L				6	119
	9,37	94 850	1,7	MR	3I 225 - 42 × 350	160 L				6	123
	9,2	96 550	2,36	MR	3I 250 - 42 × 350	160 L				6	125
	9,34	95 100	3,15	MR	3I 280 - 42 × 350	160 L				6	123
	11,5	77 300	1,7	MR	3I 200 - 42 × 350	160 L				6	100
	11,7	76 150	2,36	MR	3I 225 - 42 × 350	160 L				6	98,5
	11,7	76 100	3,35	MR	3I 250 - 42 × 350	160 L				6	98,5
	13,3	66 800	2	MR	3I 200 - 42 × 350	160 L				6	86,4
	13	68 600	2,8	MR	3I 225 - 42 × 350	160 L				6	88,8
	12,9	68 750	3,75	MR	3I 250 - 42 × 350	160 L				6	89
	14,8	60 200	1,25	MR	3I 180 - 42 × 350	160 L				6	77,9
	14,7	60 500	1,7	MR	3I 200 - 38 × 300	132 MC				4	119
	14,7	60 500	1,7	MR	3I 200 - 42 × 350	160 M				4	119
	14,3	62 350	2,36	MR	3I 225 - 38 × 300	132 MC				4	123
	14,3	62 350	2,36	MR	3I 225 - 42 × 350	160 M				4	123
	14	63 450	3,35	MR	3I 250 - 42 × 350	160 M				4	125
	18,1	49 050	1,25	MR	3I 160 - 42 × 350	160 L				6	63,5
	16,3	54 650	1,5	MR	3I 180 - 38 × 300	132 MC				4	108
	18	49 300	1,7	MR	3I 180 - 42 × 350	160 L				6	63,8
	17,5	50 800	2,36	MR	3I 200 - 38 × 300	132 MC				4	100
	17,5	50 800	2,36	MR	3I 200 - 42 × 350	160 M				4	100
	17,8	50 050	3,55	MR	3I 225 - 38 × 300	132 MC				4	98,5
	17,8	50 050	3,55	MR	3I 225 - 42 × 350	160 M				4	98,5
	18,7	47 550	1,4	MR	3I 160 - 38 × 300	132 MC				4	93,7
	20,7	42 900	1,6	MR	3I 160 - 42 × 350	160 L				6	55,5
	18,8	47 350	1,7	MR	3I 180 - 38 × 300	132 MC				4	93,3
	20,8	42 700	1,8	MR	3I 180 - 42 × 350	160 L				6	55,3
	20,2	43 900	3	MR	3I 200 - 38 × 300	132 MC				4	86,4
	20,2	43 900	3	MR	3I 200 - 42 × 350	160 M				4	86,4
	20,4	43 500	1,4	MR	3I 160 - 38 × 300	132 MC				4	85,7
	23,1	38 400	1,32	MR	3I 160 - 42 × 350	160 M				4	75,6
	20,3	43 700	1,9	MR	3I 180 - 38 × 300	132 MC				4	86,1
	22,5	39 550	1,9	MR	3I 180 - 42 × 350	160 M				4	77,9
	20,8	42 650	2,8	MR	3I 200 - 38 × 300	132 MC				4	84
	20,8	42 650	2,8	MR	3I 200 - 42 × 350	160 M				4	84

1) Powers valid for continuous duty S1; **increase possible** for duty cycles S2 ... S10 (see ch. 1 «General specifications»): in which case M_2 increases and f_S decreases.
2) For complete designation when ordering see ch. 2.

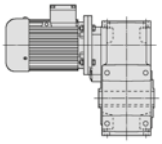

Motor power P_1 hp 1)	Output speed n_2 rpm	Output torque T_2 lb in	Service factor f_S						Gear ratio i
15	23,4	38 050	1,7	MR	3I 160 - 38 × 300	132 MC	4		74,9
	25,9	34 300	1,9	MR	3I 160 - 42 × 350	160 L	6		44,4
	23,5	37 900	2,36	MR	3I 180 - 38 × 300	132 MC	4		74,6
	26	34 200	2,65	MR	3I 180 - 42 × 350	160 L	6		44,2
	24,1	36 850	3,55	MR	3I 200 - 42 × 350	160 M	4		72,6
	28,2	31 450	1,32	MR	3I 140 - 38 × 300	132 MC	4		62
	27,6	32 250	1,9	MR	3I 160 - 38 × 300	132 MC	4		63,5
	27,6	32 250	1,9	MR	3I 160 - 42 × 350	160 M	4		63,5
	27,4	32 400	2,5	MR	3I 180 - 38 × 300	132 MC	4		63,8
	27,4	32 400	2,5	MR	3I 180 - 42 × 350	160 M	4		63,8
	31,6	28 100	1,5	MR	3I 140 - 38 × 300	132 MC	4		55,4
	31,5	28 200	2,36	MR	3I 160 - 38 × 300	132 MC	4		55,5
	31,5	28 200	2,36	MR	3I 160 - 42 × 350	160 M	4		55,5
	31,7	28 050	2,8	MR	3I 180 - 42 × 350	160 M	4		55,3
	34,7	25 600	1,6	MR	3I 140 - 38 × 300	132 MC	4		50,4
	34,5	25 800	2,36	MR	3I 160 - 38 × 300	132 MC	4		50,8
	34,5	25 800	2,36	MR	3I 160 - 42 × 350	160 M	4		50,8
	34,3	25 900	3,15	MR	3I 180 - 42 × 350	160 M	4		51
	38,8	22 900	1,8	MR	3I 140 - 38 × 300	132 MC	4		45,1
	39,4	22 550	2,8	MR	3I 160 - 38 × 300	132 MC	4		44,4
	39,4	22 550	2,8	MR	3I 160 - 42 × 350	160 M	4		44,4
	44,7	19 850	1,4	MR	3I 125 - 38 × 300	132 MC	4		39,1
	47,7	19 000	1,18	MR	2I 125 - 42 × 350	160 L	6		24,1
	45,3	19 650	2,12	MR	3I 140 - 38 × 300	132 MC	4		38,7
	47,7	19 000	1,7	MR	2I 140 - 42 × 350	160 L	6		24,1
	45,5	19 550	3,35	MR	3I 160 - 42 × 350	160 M	4		38,5
	46,7	19 450	2,65	MR	2I 160 - 42 × 350	160 L	6		24,6
	46,6	19 050	2,12	MR	3I 140 - 38 × 300	132 MC	4		37,5
	53	17 100	2	MR	2I 140 - 42 × 350	160 L	6		21,7
	48	18 550	3,55	MR	3I 160 - 42 × 350	160 M	4		36,5
	51,1	17 750	3,15	MR	2I 160 - 42 × 350	160 L	6		22,5
	54,4	16 300	1,8	MR	3I 125 - 38 × 300	132 MC	4		32,1
	59,7	15 200	1,7	MR	2I 125 - 42 × 350	160 L	6		19,3
	54,4	16 350	2,24	MR	3I 140 - 38 × 300	132 MC	4		32,2
	58,5	15 500	2,36	MR	2I 140 - 42 × 350	160 L	6		19,6
	55,3	16 050	4	MR	3I 160 - 42 × 350	160 M	4		31,6
	55,6	16 300	3,55	MR	2I 160 - 42 × 350	160 L	6		20,7
	60,2	14 750	2,24	MR	3I 140 - 38 × 300	132 MC	4		29,1
	65,5	13 850	2,65	MR	2I 140 - 42 × 350	160 L	6		17,6
	61,7	14 400	4	MR	3I 160 - 42 × 350	160 M	4		28,4
	66	13 450	2	MR	3I 125 - 38 × 300	132 MC	4		26,5
	72,6	12 500	1,8	MR	2I 125 - 38 × 300	132 MC	4		24,1
	72,6	12 500	1,8	MR	2I 125 - 42 × 350	160 M	4		24,1
	72,6	12 500	2	MR	2I 125 - 42 × 350	160 L	6		15,8
	72,6	12 500	2,36	MR	2I 140 - 38 × 300	132 MC	4		24,1
	72,6	12 500	2,36	MR	2I 140 - 42 × 350	160 M	4		24,1
	80,7	11 250	3	MR	2I 140 - 38 × 300	132 MC	4		21,7
	80,7	11 250	3	MR	2I 140 - 42 × 350	160 M	4		21,7
	90,6	10 000	1,32	MR	2I 100 - 38 × 300	132 MC	4		19,3
	80,3	11 050	2,65	MR	3I 125 - 38 × 300	132 MC	4		21,8
	90,8	10 000	2,36	MR	2I 125 - 38 × 300	132 MC	4		19,3
	90,8	10 000	2,36	MR	2I 125 - 42 × 350	160 M	4		19,3
	89,1	10 200	3,35	MR	2I 140 - 38 × 300	132 MC	4		19,6
	89,1	10 200	3,35	MR	2I 140 - 42 × 350	160 M	4		19,6
	109	8 340	1,4	MR	2I 100 - 38 × 300	132 MC	4		16,1
	111	8 210	3	MR	2I 125 - 38 × 300	132 MC	4		15,8
	111	8 210	3	MR	2I 125 - 42 × 350	160 M	4		15,8
	142	6 370	2	MR	2I 100 - 38 × 300	132 MC	4		12,3
	134	6 780	3,35	MR	2I 125 - 38 × 300	132 MC	4		13,1
	134	6 780	3,35	MR	2I 125 - 42 × 350	160 M	4		13,1
	171	5 310	2,24	MR	2I 100 - 38 × 300	132 MC	4		10,2
	163	5 570	4,25	MR	2I 125 - 38 × 300	132 MC	4		10,7
	163	5 570	4,25	MR	2I 125 - 42 × 350	160 M	4		10,7
	219	4 150	2,8	MR	2I 100 - 38 × 300	132 MC	4		8,01
	212	4 290	5,3	MR	2I 125 - 38 × 300	132 MC	4		8,26
	212	4 290	5,3	MR	2I 125 - 42 × 350	160 M	4		8,26

Motor power P_1 hp 1)	Output speed n_2 rpm	Output torque T_2 lb in	Service factor f_S						Gear ratio i
15	273	3 330	3,15	MR	2I 100 - 38 × 300	132 MC	4		6,42
	268	3 390	6,3	MR	2I 125 - 38 × 300	132 MC	4		6,53
	268	3 390	6,3	MR	2I 125 - 42 × 350	160 M	4		6,53
20	9,2	128 800	1,8	MR	3I 250 - 48 × 350	180 L	6		125
	9,34	126 800	2,36	MR	3I 280 - 48 × 350	180 L	6		123
	11,5	103 100	1,25	MR	3I 200 - 48 × 350	180 L	6		100
	11,7	101 500	1,8	MR	3I 225 - 48 × 350	180 L	6		98,5
	11,7	101 400	2,5	MR	3I 250 - 48 × 350	180 L	6		98,5
	11,5	103 400	3,35	MR	3I 280 - 48 × 350	180 L	6		100
	13,3	89 050	1,5	MR	3I 200 - 48 × 350	180 L	6		86,4
	13	91 450	2,12	MR	3I 225 - 48 × 350	180 L	6		88,8
	12,9	91 700	2,8	MR	3I 250 - 48 × 350	180 L	6		89
	12,8	92 400	4	MR	3I 280 - 48 × 350	180 L	6		89,7
	14,7	80 700	1,32	MR	3I 200 - 42 × 350	160 L	4		119
	13,7	86 550	1,5	MR	3I 200 - 48 × 350	180 L	6		84
	14,3	83 100	1,8	MR	3I 225 - 42 × 350	160 L	4		123
	14	84 600	2,5	MR	3I 250 - 42 × 350	160 L	4		125
	13,9	85 150	3	MR	3I 250 - 48 × 350	180 L	6		82,7
	14,2	83 350	3,55	MR	3I 280 - 42 × 350	160 L	4		123
	18	65 750	1,25	MR	3I 180 - 48 × 350	180 L	6		63,8
	17,5	67 750	1,8	MR	3I 200 - 42 × 350	160 L	4		100
	17,8	66 750	2,65	MR	3I 225 - 42 × 350	160 L	4		98,5
	17,8	66 650	3,75	MR	3I 250 - 42 × 350	160 L	4		98,5
	20,8	56 950	1,4	MR	3I 180 - 48 × 350	180 L	6		55,3
	20,2	58 550	2,24	MR	3I 200 - 42 × 350	160 L	4		86,4
	19,7	60 100	3	MR	3I 225 - 42 × 350	160 L	4		88,8
	22,5	52 750	1,4	MR	3I 180 - 42 × 350	160 L	4		77,9
	20,8	56 850	2,12	MR	3I 200 - 42 × 350	160 L	4		84
	21,2	56 000	3,15	MR	3I 225 - 42 × 350	160 L	4		82,7
	25,9	45 750	1,4	MR	3I 160 - 48 × 350	180 L	6		44,4
	26	45 550	2	MR	3I 180 - 48 × 350	180 L	6		44,2
	24,1	49 150	2,65	MR	3I 200 - 42 × 350	160 L	4		72,6
	23,5	50 450	3,55	MR	3I 225 - 42 × 350	160 L	4		74,5
	27,6	43 000	1,4	MR	3I 160 - 42 × 350	160 L	4		63,5
	27,4	43 200	1,9	MR	3I 180 - 42 × 350	160 L	4		63,8
	28	42 400	2,8	MR	3I 200 - 42 × 350	160 L	4		62,6
	31,5	37 600	1,7	MR	3I 160 - 42 × 350	160 L	4		55,5
	31,7	37 450	2,12	MR	3I 180 - 42 × 350	160 L	4		55,3
	32,3	36 650	3,55	MR	3I 200 - 42 × 350	160 L	4		54,1
	34,7	34 150	1,18	MR	3I 140 - 38 × 300	160 L	B5R	4	50,4
	34,5	34 400	1,8	MR	3I 160 - 42 × 350	160 L	4		50,8
	34,3	34 550	2,36	MR	3I 180 - 42 × 350	160 L	4		51
	33,3	35 600	3,35	MR	3I 200 - 42 × 350	160 L	4		52,6
	38,8	30 500	1,4	MR	3I 140 - 38 × 300	160 L	B5R	4	45,1
	39,4	30 050	2,12	MR	3I 160 - 42 × 350	160 L	4		44,4
	39,6	29 950	3	MR	3I 180 - 42 × 350	160 L	4		44,2
	45,3	26 200	1,6	MR	3I 140 - 38 × 300	160 L	B5R	4	38,7
	47,7	25 350	1,25	MR	2I 140 - 48 × 350	180 L	6		24,1
	45,5	26 050	2,5	MR	3I 160 - 42 × 350	160 L	4		38,5
	46,7	25 900	1,9	MR	2I 160 - 48 × 350	180 L	6		24,6
	43,8	27 050	3,15	MR	3I 180 - 42 × 350	160 L	4		39,9
	45,4	26 700	2,8	MR	2I 180 - 48 × 350	180 L	6		25,4
	46,6	25 400	1,6	MR	3I 140 - 38 × 300	160 L	B5R	4	37,5
	53	22 800	1,5	MR	2I 140 - 48 × 350	180 L	6		21,7
	48	24 700	2,65	MR	3I 160 - 42 × 350	160 L	4		36,5
	51,1	23 700	2,36	MR	2I 160 - 48 × 350	180 L	6		22,5
	48,2	24 600	3,55	MR	3I 180 - 42 × 350	160 L	4		36,3
	49,3	24 550	3,35	MR	2I 180 - 48 × 350	180 L	6		23,3
	54,4	21 800	1,6	MR	3I 140 - 38 × 300	160 L	B5R	4	32,2
	58,5	20 650	1,7	MR	2I 140 - 48 × 350	180 L	6		19,6
	55,3	21 400	3,15	MR	3I 160 - 42 × 350	160 L	4		31,6
	55,6	21 750	2,8	MR	2I 160 - 48 × 350	180 L	6		20,7
	53,4	22 200	4	MR	3I 180 - 42 × 350	160 L	4		32,8
	55,4	21 850	3,75	MR	2I 180 - 48 × 350	180 L	6		20,8

1) Powers valid for continuous duty S1; **increase possible** for duty cycles S2 ... S10 (see ch. 1 «General specifications»): in which case M_2 increases and f_S decreases.
2) For complete designation when ordering see ch. 2.
* Mounting position **B5R** (see ch. 1)

11 - Helical gearmotor selection tables

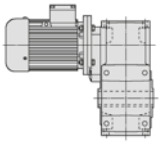

Motor power P_1 hp 1)	Output speed n_2 rpm	Output torque T_2 lb in	Service factor f_S						Gear ratio i
20	60,2	19 700	1,6	MR	3I 140 - 38 × 300	160 L	BSR	4	29,1
	65,5	18 450	2	MR	2I 140 - 48 × 350	180 L		6	17,6
	61,7	19 200	3	MR	3I 160 - 42 × 350	160 L		4	28,4
	63,6	19 000	3,35	MR	2I 160 - 48 × 350	180 L		6	18,1
	72,6	16 650	1,32	MR	2I 125 - 42 × 350	160 L		4	24,1
	72,6	16 650	1,8	MR	2I 140 - 42 × 350	160 L		4	24,1
	71,1	17 000	3	MR	2I 160 - 42 × 350	160 L		4	24,6
	80,7	15 000	2,24	MR	2I 140 - 42 × 350	160 L		4	21,7
	77,8	15 550	3,55	MR	2I 160 - 42 × 350	160 L		4	22,5
	90,8	13 350	1,8	MR	2I 125 - 42 × 350	160 L		4	19,3
	89,1	13 600	2,65	MR	2I 140 - 42 × 350	160 L		4	19,6
	84,7	14 300	4	MR	2I 160 - 42 × 350	160 L		4	20,7
	99,7	12 150	3	MR	2I 140 - 42 × 350	160 L		4	17,6
	96,8	12 500	5	MR	2I 160 - 42 × 350	160 L		4	18,1
	111	10 950	2,12	MR	2I 125 - 42 × 350	160 L		4	15,8
	116	10 400	3,35	MR	2I 140 - 42 × 350	160 L		4	15,1
	119	10 150	3,35	MR	2I 140 - 42 × 350	160 L		4	14,7
	134	9 040	2,65	MR	2I 125 - 42 × 350	160 L		4	13,1
	131	9 210	3,75	MR	2I 140 - 42 × 350	160 L		4	13,3
	147	8 230	4,25	MR	2I 140 - 42 × 350	160 L		4	11,9
	163	7 420	3,15	MR	2I 125 - 42 × 350	160 L		4	10,7
	171	7 060	4,75	MR	2I 140 - 42 × 350	160 L		4	10,2
	212	5 710	4	MR	2I 125 - 42 × 350	160 L		4	8,26
	268	4 520	4,5	MR	2I 125 - 42 × 350	160 L		4	6,53
25	9,2	161 000	1,4	MR	3I 250 - 55 × 400	200 LR		6	125
	9,34	158 500	1,9	MR	3I 280 - 55 × 400	200 LR		6	123
	9,07	163 200	2,36	MR	3I 320 - 55 × 400	200 LR		6	127
	9,07	163 200	3	MR	3I 321 - 55 × 400	200 LR		6	127
	11,7	126 800	2	MR	3I 250 - 55 × 400	200 LR		6	98,5
	11,5	129 200	2,65	MR	3I 280 - 55 × 400	200 LR		6	100
	12,9	114 600	2,36	MR	3I 250 - 55 × 400	200 LR		6	89
	12,8	115 500	3,15	MR	3I 280 - 55 × 400	200 LR		6	89,7
	14,3	103 900	1,5	MR	3I 225 - 48 × 350	180 M		4	123
	14	105 800	2	MR	3I 250 - 48 × 350	180 M		4	125
	14,2	104 200	2,8	MR	3I 280 - 48 × 350	180 M		4	123
	17,5	84 650	1,4	MR	3I 200 - 48 × 350	180 M		4	100
	17,8	83 400	2,12	MR	3I 225 - 48 × 350	180 M		4	98,5
	17,8	83 350	3	MR	3I 250 - 48 × 350	180 M		4	98,5
	20,2	73 150	1,8	MR	3I 200 - 48 × 350	180 M		4	86,4
	19,7	75 100	2,5	MR	3I 225 - 48 × 350	180 M		4	88,8
	19,7	75 300	3,35	MR	3I 250 - 48 × 350	180 M		4	89
	20,8	71 100	1,7	MR	3I 200 - 48 × 350	180 M		4	84
	21,2	70 050	2,5	MR	3I 225 - 48 × 350	180 M		4	82,7
	21,2	69 950	3,55	MR	3I 250 - 48 × 350	180 M		4	82,7
	24,1	61 450	2,12	MR	3I 200 - 48 × 350	180 M		4	72,6
	23,5	63 050	2,8	MR	3I 225 - 48 × 350	180 M		4	74,5
	27,4	54 000	1,5	MR	3I 180 - 48 × 350	180 M		4	63,8
	28	53 000	2,24	MR	3I 200 - 48 × 350	180 M		4	62,6
	28,4	52 200	3,35	MR	3I 225 - 48 × 350	180 M		4	61,7
	31,5	47 000	1,4	MR	3I 160 - 48 × 350	180 M		4	55,5
	31,7	46 800	1,7	MR	3I 180 - 48 × 350	180 M		4	55,3
	32,3	45 800	2,8	MR	3I 200 - 48 × 350	180 M		4	54,1
	31,5	47 000	3,75	MR	3I 225 - 48 × 350	180 M		4	55,5
	34,5	43 000	1,4	MR	3I 160 - 48 × 350	180 M		4	50,8
	34,3	43 200	1,9	MR	3I 180 - 48 × 350	180 M		4	51
	33,3	44 500	2,65	MR	3I 200 - 48 × 350	180 M		4	52,6
	33,8	43 800	4	MR	3I 225 - 48 × 350	180 M		4	51,8
	39,4	37 600	1,7	MR	3I 160 - 48 × 350	180 M		4	44,4
	39,6	37 450	2,36	MR	3I 180 - 48 × 350	180 M		4	44,2
	38,5	38 450	3,35	MR	3I 200 - 48 × 350	180 M		4	45,4

Motor power P_1 hp 1)	Output speed n_2 rpm	Output torque T_2 lb in	Service factor f_S					Gear ratio i
25	45,5	32 600	2	MR	3I 160 - 48 × 350	180 M	4	38,5
	43,8	33 800	2,5	MR	3I 180 - 48 × 350	180 M	4	39,9
	42,1	35 150	3,75	MR	3I 200 - 48 × 350	180 M	4	41,5
	48	30 900	2,12	MR	3I 160 - 48 × 350	180 M	4	36,5
	48,2	30 750	2,8	MR	3I 180 - 48 × 350	180 M	4	36,3
	55,3	26 750	2,5	MR	3I 160 - 48 × 350	180 M	4	31,6
	53,4	27 750	3,35	MR	3I 180 - 48 × 350	180 M	4	32,8
	61,7	24 000	2,5	MR	3I 160 - 48 × 350	180 M	4	28,4
	61,2	24 200	2,65	MR	3I 180 - 48 × 350	180 M	4	28,6
	72,6	20 800	1,06	MR	2I 125 - 48 × 350	180 M	4	24,1
	72,6	20 800	1,4	MR	2I 140 - 48 × 350	180 M	4	24,1
	71,1	21 300	2,36	MR	2I 160 - 48 × 350	180 M	4	24,6
	69	21 900	3,35	MR	2I 180 - 48 × 350	180 M	4	25,4
	80,7	18 750	1,8	MR	2I 140 - 48 × 350	180 M	4	21,7
	77,8	19 450	2,8	MR	2I 160 - 48 × 350	180 M	4	22,5
	75	20 150	4	MR	2I 180 - 48 × 350	180 M	4	23,3
	90,8	16 650	1,4	MR	2I 125 - 48 × 350	180 M	4	19,3
	89,1	17 000	2,12	MR	2I 140 - 48 × 350	180 M	4	19,6
	84,7	17 850	3,35	MR	2I 160 - 48 × 350	180 M	4	20,7
	99,7	15 150	2,36	MR	2I 140 - 48 × 350	180 M	4	17,6
	96,8	15 600	4	MR	2I 160 - 48 × 350	180 M	4	18,1
	111	13 700	1,7	MR	2I 125 - 48 × 350	180 M	4	15,8
	116	13 000	2,8	MR	2I 140 - 48 × 350	180 M	4	15,1
	112	13 550	4,5	MR	2I 160 - 48 × 350	180 M	4	15,7
	119	12 700	2,65	MR	2I 140 - 48 × 350	180 M	4	14,7
	124	12 150	4,5	MR	2I 160 - 48 × 350	180 M	4	14,1
	134	11 300	2,12	MR	2I 125 - 48 × 350	180 M	4	13,1
	131	11 500	3	MR	2I 140 - 48 × 350	180 M	4	13,3
	129	11 750	5	MR	2I 160 - 48 × 350	180 M	4	13,6
	147	10 300	3,35	MR	2I 140 - 48 × 350	180 M	4	11,9
	147	10 250	6	MR	2I 160 - 48 × 350	180 M	4	11,9
	163	9 280	2,5	MR	2I 125 - 48 × 350	180 M	4	10,7
	171	8 820	3,75	MR	2I 140 - 48 × 350	180 M	4	10,2
	170	8 900	6,7	MR	2I 160 - 48 × 350	180 M	4	10,3
	212	7 140	3,35	MR	2I 125 - 48 × 350	180 M	4	8,26
	268	5 650	3,75	MR	2I 125 - 48 × 350	180 M	4	6,53
30	9,34	190 200	1,6	MR	3I 280 - 55 × 400	200 L	6	123
	9,07	195 900	1,9	MR	3I 320 - 55 × 400	200 L	6	127
	9,07	195 900	2,36	MR	3I 321 - 55 × 400	200 L	6	127
	8,81	201 800	3,35	MR	3I 360 - 55 × 400	200 L	6	131
	11,7	152 200	1,7	MR	3I 250 - 55 × 400	200 L	6	98,5
	11,5	155 100	2,12	MR	3I 280 - 55 × 400	200 L	6	100
	11	161 800	2,8	MR	3I 320 - 55 × 400	200 L	6	105
	12,9	137 500	1,9	MR	3I 250 - 55 × 400	200 L	6	89
	12,8	138 600	2,65	MR	3I 280 - 55 × 400	200 L	6	89,7
	12,8	139 300	3	MR	3I 320 - 55 × 400	200 L	6	90,1
	14,3	124 700	1,18	MR	3I 225 - 48 × 350	180 L	4	123
	14	126 900	1,7	MR	3I 250 - 48 × 350	180 L	4	125
	14,2	125 000	2,36	MR	3I 280 - 48 × 350	180 L	4	123
	17,5	101 600	1,18	MR	3I 200 - 48 × 350	180 L	4	100
	17,8	100 100	1,7	MR	3I 225 - 48 × 350	180 L	4	98,5
	17,8	100 000	2,5	MR	3I 250 - 48 × 350	180 L	4	98,5
	17,4	101 900	3,15	MR	3I 280 - 48 × 350	180 L	4	100
	20,2	87 800	1,5	MR	3I 200 - 48 × 350	180 L	4	86,4
	19,7	90 150	2	MR	3I 225 - 48 × 350	180 L	4	88,8
	19,7	90 400	2,8	MR	3I 250 - 48 × 350	180 L	4	89
	20,8	85 300	1,4	MR	3I 200 - 48 × 350	180 L	4	84
	21,2	84 050	2,12	MR	3I 225 - 48 × 350	180 L	4	82,7
	21,2	83 950	3	MR	3I 250 - 48 × 350	180 L	4	82,7
	24,1	73 700	1,7	MR	3I 200 - 48 × 350	180 L	4	72,6
	23,5	75 700	2,36	MR	3I 225 - 48 × 350	180 L	4	74,5
	23,4	75 900	3,35	MR	3I 250 - 48 × 350	180 L	4	74,7

1) Powers valid for continuous duty S1; **increase possible** for duty cycles S2 ... S10 (see ch. 1 «General specifications»): in which case M_2 increases and f_S decreases.
2) For complete designation when ordering see ch. 2.

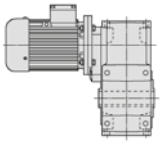

Motor power P_1 hp 1)	Output speed n_2 rpm	Output torque T_2 lb in	Service factor f_S							Gear ratio i
30	27,4	64 800	1,25	MR	3I 180 - 48 × 350	180 L		4		63,8
	28	63 600	1,9	MR	3I 200 - 48 × 350	180 L		4		62,6
	28,4	62 650	2,8	MR	3I 225 - 48 × 350	180 L		4		61,7
	31,7	56 150	1,4	MR	3I 180 - 48 × 350	180 L		4		55,3
	32,3	54 950	2,36	MR	3I 200 - 48 × 350	180 L		4		54,1
	31,5	56 400	3,15	MR	3I 225 - 48 × 350	180 L		4		55,5
	34,5	51 550	1,18	MR	3I 160 - 48 × 350	180 L		4		50,8
	34,3	51 850	1,6	MR	3I 180 - 48 × 350	180 L		4		51
	33,3	53 400	2,24	MR	3I 200 - 48 × 350	180 L		4		52,6
	33,8	52 600	3,15	MR	3I 225 - 48 × 350	180 L		4		51,8
	39,4	45 100	1,4	MR	3I 160 - 48 × 350	180 L		4		44,4
	39,6	44 900	2	MR	3I 180 - 48 × 350	180 L		4		44,2
	38,5	46 150	2,8	MR	3I 200 - 48 × 350	180 L		4		45,4
	45,5	39 100	1,7	MR	3I 160 - 48 × 350	180 L		4		38,5
	46,7	38 850	1,32	MR	2I 160 - 55 × 400	200 L		6		24,6
	43,8	40 550	2,12	MR	3I 180 - 48 × 350	180 L		4		39,9
	45,4	40 000	1,8	MR	2I 180 - 55 × 400	200 L		6		25,4
	42,1	42 200	3,15	MR	3I 200 - 48 × 350	180 L		4		41,5
	47,4	38 250	2,65	MR	2I 200 - 55 × 400	200 L		6		24,2
	48	37 050	1,8	MR	3I 160 - 48 × 350	180 L		4		36,5
	51,1	35 500	1,6	MR	2I 160 - 55 × 400	200 L		6		22,5
	48,2	36 900	2,36	MR	3I 180 - 48 × 350	180 L		4		36,3
	49,3	36 850	2,24	MR	2I 180 - 55 × 400	200 L		6		23,3
	50,8	34 950	3,55	MR	3I 200 - 48 × 350	180 L		4		34,4
	51,9	34 950	3,15	MR	2I 200 - 55 × 400	200 L		6		22,2
	55,3	32 100	2	MR	3I 160 - 48 × 350	180 L		4		31,6
	55,6	32 600	1,8	MR	2I 160 - 55 × 400	200 L		6		20,7
	53,4	33 300	2,8	MR	3I 180 - 48 × 350	180 L		4		32,8
	55,4	32 800	2,5	MR	2I 180 - 55 × 400	200 L		6		20,8
	55,6	32 000	4	MR	3I 200 - 48 × 350	180 L		4		31,5
	56,5	32 100	3,75	MR	2I 200 - 55 × 400	200 L		6		20,3
	61,7	28 850	2	MR	3I 160 - 48 × 350	180 L		4		28,4
	63,6	28 550	2,24	MR	2I 160 - 55 × 400	200 L		6		18,1
	61,2	29 050	2,24	MR	3I 180 - 48 × 350	180 L		4		28,6
	63,9	28 400	2,5	MR	2I 180 - 55 × 400	200 L		6		18
	64,3	27 650	4,75	MR	3I 200 - 48 × 350	180 L		4		27,2
	72,6	25 000	1,18	MR	2I 140 - 48 × 350	180 L		4		24,1
	71,1	25 550	1,9	MR	2I 160 - 48 × 350	180 L		4		24,6
	73,4	24 750	2,5	MR	2I 160 - 55 × 400	200 L		6		15,7
	69	26 300	2,8	MR	2I 180 - 48 × 350	180 L		4		25,4
	80,7	22 500	1,5	MR	2I 140 - 48 × 350	180 L		4		21,7
	77,8	23 350	2,36	MR	2I 160 - 48 × 350	180 L		4		22,5
	75	24 200	3,35	MR	2I 180 - 48 × 350	180 L		4		23,3
	90,8	20 000	1,18	MR	2I 125 - 48 × 350	180 L		4		19,3
	89,1	20 350	1,7	MR	2I 140 - 48 × 350	180 L		4		19,6
	84,7	21 450	2,8	MR	2I 160 - 48 × 350	180 L		4		20,7
	99,7	18 200	2	MR	2I 140 - 48 × 350	180 L		4		17,6
	96,8	18 750	3,35	MR	2I 160 - 48 × 350	180 L		4		18,1
	111	16 400	1,5	MR	2I 125 - 48 × 350	180 L		4		15,8
	116	15 600	2,24	MR	2I 140 - 48 × 350	180 L		4		15,1
	112	16 250	3,75	MR	2I 160 - 48 × 350	180 L		4		15,7
	119	15 250	2,24	MR	2I 140 - 48 × 350	180 L		4		14,7
	124	14 600	3,75	MR	2I 160 - 48 × 350	180 L		4		14,1
	134	13 550	1,7	MR	2I 125 - 48 × 350	180 L		4		13,1
	131	13 800	2,5	MR	2I 140 - 48 × 350	180 L		4		13,3
	129	14 100	4	MR	2I 160 - 48 × 350	180 L		4		13,6
	147	12 350	2,8	MR	2I 140 - 48 × 350	180 L		4		11,9
	147	12 300	5	MR	2I 160 - 48 × 350	180 L		4		11,9
	163	11 150	2,12	MR	2I 125 - 48 × 350	180 L		4		10,7
	171	10 600	3,15	MR	2I 140 - 48 × 350	180 L		4		10,2
	170	10 700	5,6	MR	2I 160 - 48 × 350	180 L		4		10,3
	190	9 570	3,15	MR	2I 140 - 48 × 350	180 L		4		9,22
	189	9 580	5,6	MR	2I 160 - 48 × 350	180 L		4		9,24
	212	8 570	2,8	MR	2I 125 - 48 × 350	180 L		4		8,26
	268	6 780	3,15	MR	2I 125 - 48 × 350	180 L		4		6,53

Motor power P_1 hp 1)	Output speed n_2 rpm	Output torque T_2 lb in	Service factor f_S							Gear ratio i
40	9,07	261 200	1,5	MR	3I 320 - 60 × 450	225 M		6		127
	9,07	261 200	1,8	MR	3I 321 - 60 × 450	225 M		6		127
	8,81	269 100	2,5	MR	3I 360 - 60 × 450	225 M		6		131
	11,7	202 900	1,32	MR	3I 250 - 60 × 450	225 M		6		98,5
	11,5	206 800	1,6	MR	3I 280 - 60 × 450	225 M		6		100
	11	215 800	2,12	MR	3I 320 - 60 × 450	225 M		6		105
	11	215 800	2,65	MR	3I 321 - 60 × 450	225 M		6		105
	11,2	212 200	3,55	MR	3I 360 - 60 × 450	225 M		6		103
	12,9	183 400	1,4	MR	3I 250 - 60 × 450	225 M		6		89
	12,8	184 800	2	MR	3I 280 - 60 × 450	225 M		6		89,7
	12,8	185 700	2,24	MR	3I 320 - 60 × 450	225 M		6		90,1
	12,8	185 700	2,8	MR	3I 321 - 60 × 450	225 M		6		90,1
	12,4	191 000	3,75	MR	3I 360 - 60 × 450	225 M		6		92,7
	14	169 200	1,25	MR	3I 250 - 55 × 400	200 L		4		125
	13,9	170 300	1,5	MR	3I 250 - 60 × 450	225 M		6		82,7
	14,2	166 700	1,7	MR	3I 280 - 55 × 400	200 L		4		123
	13,8	171 600	2,12	MR	3I 320 - 55 × 400	200 L		4		127
	13,8	171 600	2,65	MR	3I 321 - 55 × 400	200 L		4		127
	13,9	170 000	2,5	MR	3I 320 - 60 × 450	225 M		6		82,5
	13,9	170 000	3,15	MR	3I 321 - 60 × 450	225 M		6		82,5
	13,4	176 800	3,55	MR	3I 360 - 55 × 400	200 L		4		131
	18,6	127 100	1,4	MR	3I 225 - 60 × 450	225 M		6		61,7
	17,8	133 300	1,8	MR	3I 250 - 55 × 400	200 L		4		98,5
	17,4	135 900	2,36	MR	3I 280 - 55 × 400	200 L		4		100
	16,7	141 800	3	MR	3I 320 - 55 × 400	200 L		4		105
	20,7	114 500	1,6	MR	3I 225 - 60 × 450	225 M		6		55,5
	19,7	120 500	2,12	MR	3I 250 - 55 × 400	200 L		4		89
	19,5	121 400	3	MR	3I 280 - 55 × 400	200 L		4		89,7
	22,8	104 000	1,4	MR	3I 225 - 55 × 400	200 L		4		76,8
	21,2	111 900	2,12	MR	3I 250 - 55 × 400	200 L		4		82,7
	20,8	114 100	2,8	MR	3I 280 - 55 × 400	200 L		4		84,3
	25,3	93 600	1,4	MR	3I 200 - 60 × 450	225 M		6		45,4
	24,7	96 100	1,9	MR	3I 225 - 60 × 450	225 M		6		46,6
	23,4	101 200	2,5	MR	3I 250 - 55 × 400	200 L		4		74,7
	23,2	101 900	3,55	MR	3I 280 - 55 × 400	200 L		4		75,3
	28	84 800	1,4	MR	3I 200 - 55 × 400	200 L		4		62,6
	28,4	83 500	2	MR	3I 225 - 55 × 400	200 L		4		61,7
	28,4	83 350	2,8	MR	3I 250 - 55 × 400	200 L		4		61,5
	32,3	73 250	1,7	MR	3I 200 - 55 × 400	200 L		4		54,1
	31,5	75 200	2,36	MR	3I 225 - 55 × 400	200 L		4		55,5
	31,5	75 300	3,35	MR	3I 250 - 55 × 400	200 L		4		55,6
	34,3	69 100	1,18	MR	3I 180 - 48 × 350	200 L	B5R	4		51
	33,3	71 200	1,7	MR	3I 200 - 55 × 400	200 L		4		52,6
	33,8	70 100	2,5	MR	3I 225 - 55 × 400	200 L		4		51,8
	33,9	69 950	3,35	MR	3I 250 - 55 × 400	200 L		4		51,7
	39,6	59 900	1,5	MR	3I 180 - 48 × 350	200 L	B5R	4		44,2
	38,5	61 500	2,12	MR	3I 200 - 55 × 400	200 L		4		45,4
	37,5	63 150	2,8	MR	3I 225 - 55 × 400	200 L		4		46,6
	43,8	54 050	1,6	MR	3I 180 - 48 × 350	200 L	B5R	4		39,9
	42,1	56 250	2,36	MR	3I 200 - 55 × 400	200 L		4		41,5
	43,3	54 700	3,35	MR	3I 225 - 55 × 400	200 L		4		40,4
	48,2	49 200	1,8	MR	3I 180 - 48 × 350	200 L	B5R	4		36,3
	50,8	46 650	2,65	MR	3I 200 - 55 × 400	200 L		4		34,4
	49,5	47 850	3,75	MR	3I 225 - 55 × 400	200 L		4		35,4
	53,4	44 400	2	MR	3I 180 - 48 × 350	200 L	B5R	4		32,8
	55,6	42 650	3	MR	3I 200 - 55 × 400	200 L		4		31,5
	57,1	41 450	4	MR	3I 225 - 55 × 400	200 L		4		30,6
	61,2	38 700	1,7	MR	3I 180 - 48 × 350	200 L	B5R	4		28,6
	64,3	36 850	3,55	MR	3I 200 - 55 × 400	200 L		4		27,2
	71,1	34 050	1,5	MR	2I 160 - 55 × 400	200 L		4		24,6
	69	35 050	2	MR	2I 180 - 55 × 400	200 L		4		25,4
	72,2	33 500	3	MR	2I 200 - 55 × 400	200 L		4		24,2
	77,8	31 100	1,8	MR	2I 160 - 55 × 400	200 L		4		22,5
	75	32 250	2,5	MR	2I 180 - 55 × 400	200 L		4		23,3
	79	30 650	3,55	MR	2I 200 - 55 × 400	200 L		4		22,2

1) Powers valid for continuous duty S1; **increase possible** for duty cycles S2 ... S10 (see ch. 1 «General specifications»): in which case M_2 increases and f_S decreases.
2) For complete designation when ordering see ch. 2.
* Mounting position **B5R** (see ch. 1)

11 - Helical gearmotor selection tables

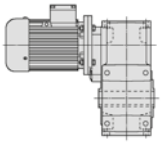

Motor power P_1 hp 1)	Output speed n_2 rpm	Output torque T_2 lb in	Service factor f_S							Gear ratio i
40	**84,7**	28 600	2	**MR**	**2I 160 - 55 × 400**	200 L		4		20,7
	84,3	28 700	2,8	**MR**	**2I 180 - 55 × 400**	200 L		4		20,8
	86	28 150	4,25	**MR**	**2I 200 - 55 × 400**	200 L		4		20,3
	96,8	25 000	2,5	**MR**	**2I 160 - 55 × 400**	200 L		4		18,1
	97,2	24 900	2,8	**MR**	**2I 180 - 55 × 400**	200 L		4		18
	112	21 650	2,8	**MR**	**2I 160 - 55 × 400**	200 L		4		15,7
	108	22 450	2,8	**MR**	**2I 180 - 55 × 400**	200 L		4		16,3
	119	20 350	1,7	**MR**	**2I 140 - 48 × 350**	200 L	BSR	4		14,7
	124	19 450	2,8	**MR**	**2I 160 - 55 × 400**	200 L		4		14,1
	122	19 900	3,75	**MR**	**2I 180 - 55 × 400**	200 L		4		14,4
	131	18 400	1,9	**MR**	**2I 140 - 48 × 350**	200 L	BSR	4		13,3
	129	18 800	3,15	**MR**	**2I 160 - 55 × 400**	200 L		4		13,6
	128	18 900	4	**MR**	**2I 180 - 55 × 400**	200 L		4		13,6
	147	16 450	2,12	**MR**	**2I 140 - 48 × 350**	200 L	BSR	4		11,9
	147	16 450	3,75	**MR**	**2I 160 - 55 × 400**	200 L		4		11,9
	148	16 350	4,5	**MR**	**2I 180 - 55 × 400**	200 L		4		11,8
	171	14 100	2,36	**MR**	**2I 140 - 48 × 350**	200 L	BSR	4		10,2
	170	14 250	4	**MR**	**2I 160 - 55 × 400**	200 L		4		10,3
	164	14 750	4,75	**MR**	**2I 180 - 55 × 400**	200 L		4		10,7
	190	12 750	2,36	**MR**	**2I 140 - 48 × 350**	200 L	BSR	4		9,22
	189	12 800	4	**MR**	**2I 160 - 55 × 400**	200 L		4		9,24
	188	12 850	4,75	**MR**	**2I 180 - 55 × 400**	200 L		4		9,31
	218	11 100	4,75	**MR**	**2I 160 - 55 × 400**	200 L		4		8,03
	273	8 870	4,75	**MR**	**2I 160 - 55 × 400**	200 L		4		6,41
50	**9,07**	326 500	1,5	**MR**	**3I 321 - 65 × 550**	250 M		6		127
	8,81	336 300	2	**MR**	**3I 360 - 65 × 550**	250 M		6		131
	11	269 700	1,7	**MR**	**3I 320 - 65 × 550**	250 M		6		105
	11	269 700	2,12	**MR**	**3I 321 - 65 × 550**	250 M		6		105
	11,2	265 300	2,8	**MR**	**3I 360 - 65 × 550**	250 M		6		103
	12,8	232 100	1,8	**MR**	**3I 320 - 65 × 550**	250 M		6		90,1
	12,8	232 100	2,24	**MR**	**3I 321 - 65 × 550**	250 M		6		90,1
	12,4	238 800	3	**MR**	**3I 360 - 65 × 550**	250 M		6		92,7
	14,2	208 300	1,4	**MR**	**3I 280 - 60 × 450**	225 S		4		123
	13,8	214 600	1,7	**MR**	**3I 320 - 60 × 450**	225 S		4		127
	13,8	214 600	2,12	**MR**	**3I 321 - 60 × 450**	225 S		4		127
	13,9	212 500	2	**MR**	**3I 320 - 65 × 550**	250 M		6		82,5
	13,9	212 500	2,5	**MR**	**3I 321 - 65 × 550**	250 M		6		82,5
	13,4	221 000	2,8	**MR**	**3I 360 - 60 × 450**	225 S		4		131
	17,8	166 700	1,5	**MR**	**3I 250 - 60 × 450**	225 S		4		98,5
	17,4	169 900	1,9	**MR**	**3I 280 - 60 × 450**	225 S		4		100
	16,7	177 200	2,36	**MR**	**3I 320 - 60 × 450**	225 S		4		105
	16,7	177 200	3	**MR**	**3I 321 - 60 × 450**	225 S		4		105
	19,7	150 600	1,7	**MR**	**3I 250 - 60 × 450**	225 S		4		89
	19,5	151 800	2,36	**MR**	**3I 280 - 60 × 450**	225 S		4		89,7
	19,4	152 500	2,65	**MR**	**3I 320 - 60 × 450**	225 S		4		90,1
	21,2	139 900	1,7	**MR**	**3I 250 - 60 × 450**	225 S		4		82,7
	20,8	142 600	2,24	**MR**	**3I 280 - 60 × 450**	225 S		4		84,3
	21,2	139 600	3	**MR**	**3I 320 - 60 × 450**	225 S		4		82,5
	23,4	126 500	2	**MR**	**3I 250 - 60 × 450**	225 S		4		74,7
	23,2	127 400	2,8	**MR**	**3I 280 - 60 × 450**	225 S		4		75,3
	28	106 000	1,12	**MR**	**3I 200 - 60 × 450**	225 S		4		62,6
	28,4	104 400	1,6	**MR**	**3I 225 - 60 × 450**	225 S		4		61,7
	28,4	104 200	2,36	**MR**	**3I 250 - 60 × 450**	225 S		4		61,5
	27,9	106 200	3	**MR**	**3I 280 - 60 × 450**	225 S		4		62,7
	32,3	91 550	1,4	**MR**	**3I 200 - 60 × 450**	225 S		4		54,1
	31,5	94 000	1,9	**MR**	**3I 225 - 60 × 450**	225 S		4		55,5
	31,5	94 150	2,65	**MR**	**3I 250 - 60 × 450**	225 S		4		55,6
	31,2	94 850	3,75	**MR**	**3I 280 - 60 × 450**	225 S		4		56
	33,3	89 000	1,32	**MR**	**3I 200 - 60 × 450**	225 S		4		52,6
	33,8	87 650	1,9	**MR**	**3I 225 - 60 × 450**	225 S		4		51,8
	33,9	87 450	2,8	**MR**	**3I 250 - 60 × 450**	225 S		4		51,7
	33,2	89 150	3,55	**MR**	**3I 280 - 60 × 450**	225 S		4		52,7

Motor power P_1 hp 1)	Output speed n_2 rpm	Output torque T_2 lb in	Service factor f_S							Gear ratio i
50	**38,5**	76 900	1,6	**MR**	**3I 200 - 60 × 450**	225 S		4		45,4
	37,5	78 950	2,24	**MR**	**3I 225 - 60 × 450**	225 S		4		46,6
	37,5	79 050	3,15	**MR**	**3I 250 - 60 × 450**	225 S		4		46,7
	42,1	70 300	1,9	**MR**	**3I 200 - 60 × 450**	225 S		4		41,5
	43,3	68 400	2,65	**MR**	**3I 225 - 60 × 450**	225 S		4		40,4
	41,2	71 850	3,55	**MR**	**3I 250 - 60 × 450**	225 S		4		42,4
	50,8	58 300	2,12	**MR**	**3I 200 - 60 × 450**	225 S		4		34,4
	49,5	59 850	3	**MR**	**3I 225 - 60 × 450**	225 S		4		35,4
	55,6	53 300	2,5	**MR**	**3I 200 - 60 × 450**	225 S		4		31,5
	57,1	51 850	3,15	**MR**	**3I 225 - 60 × 450**	225 S		4		30,6
	64,3	46 100	2,8	**MR**	**3I 200 - 60 × 450**	225 S		4		27,2
	64,1	46 250	3,15	**MR**	**3I 225 - 60 × 450**	225 S		4		27,3
	71,1	42 550	1,18	**MR**	**2I 160 - 60 × 450**	225 S		4		24,6
	69	43 850	1,6	**MR**	**2I 180 - 60 × 450**	225 S		4		25,4
	72,2	41 900	2,36	**MR**	**2I 200 - 60 × 450**	225 S		4		24,2
	70,1	43 150	3,35	**MR**	**2I 225 - 60 × 450**	225 S		4		25
	77,8	38 900	1,4	**MR**	**2I 160 - 60 × 450**	225 S		4		22,5
	75	40 350	2	**MR**	**2I 180 - 60 × 450**	225 S		4		23,3
	79	38 300	2,8	**MR**	**2I 200 - 60 × 450**	225 S		4		22,2
	84,7	35 750	1,6	**MR**	**2I 160 - 60 × 450**	225 S		4		20,7
	84,3	35 900	2,24	**MR**	**2I 180 - 60 × 450**	225 S		4		20,8
	86	35 200	3,35	**MR**	**2I 200 - 60 × 450**	225 S		4		20,3
	96,8	31 250	2	**MR**	**2I 160 - 60 × 450**	225 S		4		18,1
	97,2	31 100	2,24	**MR**	**2I 180 - 60 × 450**	225 S		4		18
	99,5	30 400	4	**MR**	**2I 200 - 60 × 450**	225 S		4		17,6
	112	27 100	2,24	**MR**	**2I 160 - 60 × 450**	225 S		4		15,7
	105	28 700	2,8	**MR**	**2I 180 - 60 × 450**	225 S		4		16,6
	109	27 800	4,25	**MR**	**2I 200 - 60 × 450**	225 S		4		16,1
	124	24 300	2,24	**MR**	**2I 160 - 60 × 450**	225 S		4		14,1
	122	24 900	3	**MR**	**2I 180 - 60 × 450**	225 S		4		14,4
	129	23 500	2,5	**MR**	**2I 160 - 60 × 450**	225 S		4		13,6
	128	23 600	3,35	**MR**	**2I 180 - 60 × 450**	225 S		4		13,6
	147	20 550	3	**MR**	**2I 160 - 60 × 450**	225 S		4		11,9
	148	20 450	3,75	**MR**	**2I 180 - 60 × 450**	225 S		4		11,8
	170	17 800	3,35	**MR**	**2I 160 - 60 × 450**	225 S		4		10,3
	164	18 450	3,75	**MR**	**2I 180 - 60 × 450**	225 S		4		10,7
	189	15 950	3,35	**MR**	**2I 160 - 60 × 450**	225 S		4		9,24
	218	13 900	3,75	**MR**	**2I 160 - 60 × 450**	225 S		4		8,03
	273	11 100	3,75	**MR**	**2I 160 - 60 × 450**	225 S		4		6,41
60	**8,81**	403 600	1,6	**MR**	**3I 360 - 75 × 550**	280 S		6		131
	11	323 600	1,4	**MR**	**3I 320 - 75 × 550**	280 S		6		105
	11	323 600	1,7	**MR**	**3I 321 - 75 × 550**	280 S		6		105
	11,2	318 300	2,36	**MR**	**3I 360 - 75 × 550**	280 S		6		103
	12,8	278 500	1,5	**MR**	**3I 320 - 75 × 550**	280 S		6		90,1
	12,8	278 500	1,9	**MR**	**3I 321 - 75 × 550**	280 S		6		90,1
	12,4	286 500	2,5	**MR**	**3I 360 - 75 × 550**	280 S		6		92,7
	14,2	250 000	1,18	**MR**	**3I 280 - 60 × 450**	225 M		4		123
	13,8	257 500	1,4	**MR**	**3I 320 - 60 × 450**	225 M		4		127
	13,8	257 500	1,7	**MR**	**3I 321 - 60 × 450**	225 M		4		127
	13,9	255 000	1,7	**MR**	**3I 320 - 75 × 550**	280 S		6		82,5
	13,9	255 000	2,12	**MR**	**3I 321 - 75 × 550**	280 S		6		82,5
	13,4	265 200	2,36	**MR**	**3I 360 - 60 × 450**	225 M		4		131
	14,2	250 800	2,8	**MR**	**3I 360 - 75 × 550**	280 S		6		81,1
	17,8	200 000	1,25	**MR**	**3I 250 - 60 × 450**	225 M		4		98,5
	17,4	203 800	1,6	**MR**	**3I 280 - 60 × 450**	225 M		4		100
	16,7	212 700	2	**MR**	**3I 320 - 60 × 450**	225 M		4		105
	16,7	212 700	2,5	**MR**	**3I 321 - 60 × 450**	225 M		4		105
	17	209 200	3,35	**MR**	**3I 360 - 60 × 450**	225 M		4		103
	19,7	180 800	1,4	**MR**	**3I 250 - 60 × 450**	225 M		4		89
	19,5	182 100	2	**MR**	**3I 280 - 60 × 450**	225 M		4		89,7
	19,4	183 000	2,12	**MR**	**3I 320 - 60 × 450**	225 M		4		90,1
	19,4	183 000	2,65	**MR**	**3I 321 - 60 × 450**	225 M		4		90,1

1) Powers valid for continuous duty S1; **increase possible** for duty cycles S2 ... S10 (see ch. 1 «General specifications»): in which case M_2 increases and f_S decreases.
2) For complete designation when ordering see ch. 2.

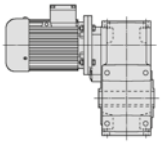

Motor power P_1 hp 1)	Output speed n_2 rpm	Output torque T_2 lb in	Service factor f_S							Gear ratio i
60	21,2	167 900	1,5	MR	3I 250 - 60 × 450	225 M		4		82,7
	20,8	171 100	1,8	MR	3I 280 - 60 × 450	225 M		4		84,3
	21,2	167 600	2,5	MR	3I 320 - 60 × 450	225 M		4		82,5
	21,2	167 600	3,15	MR	3I 321 - 60 × 450	225 M		4		82,5
	23,4	151 800	1,6	MR	3I 250 - 60 × 450	225 M		4		74,7
	23,2	152 900	2,36	MR	3I 280 - 60 × 450	225 M		4		75,3
	24,6	144 200	2,8	MR	3I 320 - 60 × 450	225 M		4		71
	28,4	125 300	1,4	MR	3I 225 - 60 × 450	225 M		4		61,7
	28,4	125 000	1,9	MR	3I 250 - 60 × 450	225 M		4		61,5
	27,9	127 400	2,5	MR	3I 280 - 60 × 450	225 M		4		62,7
	31,5	112 800	1,6	MR	3I 225 - 60 × 450	225 M		4		55,5
	31,5	113 000	2,12	MR	3I 250 - 60 × 450	225 M		4		55,6
	31,2	113 800	3,15	MR	3I 280 - 60 × 450	225 M		4		56
	33,8	105 200	1,6	MR	3I 225 - 60 × 450	225 M		4		51,8
	33,9	104 900	2,24	MR	3I 250 - 60 × 450	225 M		4		51,7
	33,2	107 000	3	MR	3I 280 - 60 × 450	225 M		4		52,7
	38,5	92 250	1,4	MR	3I 200 - 60 × 450	225 M		4		45,4
	37,5	94 700	1,9	MR	3I 225 - 60 × 450	225 M		4		46,6
	37,5	94 850	2,65	MR	3I 250 - 60 × 450	225 M		4		46,7
	37,2	95 600	3,35	MR	3I 280 - 60 × 450	225 M		4		47,1
	42,1	84 400	1,6	MR	3I 200 - 60 × 450	225 M		4		41,5
	43,3	82 050	2,24	MR	3I 225 - 60 × 450	225 M		4		40,4
	41,2	86 200	3	MR	3I 250 - 60 × 450	225 M		4		42,4
	50,8	69 950	1,8	MR	3I 200 - 60 × 450	225 M		4		34,4
	49,5	71 800	2,5	MR	3I 225 - 60 × 450	225 M		4		35,4
	47,4	74 950	3,15	MR	3I 250 - 60 × 450	225 M		4		36,9
	55,6	63 950	2	MR	3I 200 - 60 × 450	225 M		4		31,5
	57,1	62 200	2,65	MR	3I 225 - 60 × 450	225 M		4		30,6
	52,2	68 150	3,75	MR	3I 250 - 60 × 450	225 M		4		33,5
	64,3	55 300	2,36	MR	3I 200 - 60 × 450	225 M		4		27,2
	64,1	55 500	2,65	MR	3I 225 - 60 × 450	225 M		4		27,3
	61	58 300	3,75	MR	3I 250 - 60 × 450	225 M		4		28,7
	69	52 600	1,4	MR	2I 180 - 60 × 450	225 M		4		25,4
	72,2	50 300	2	MR	2I 200 - 60 × 450	225 M		4		24,2
	70,1	51 800	2,8	MR	2I 225 - 60 × 450	225 M		4		25
	77,8	46 650	1,18	MR	2I 160 - 60 × 450	225 M		4		22,5
	75	48 400	1,6	MR	2I 180 - 60 × 450	225 M		4		23,3
	79	45 950	2,36	MR	2I 200 - 60 × 450	225 M		4		22,2
	76,2	47 650	3,35	MR	2I 225 - 60 × 450	225 M		4		23
	84,7	42 850	1,4	MR	2I 160 - 60 × 450	225 M		4		20,7
	84,3	43 100	1,8	MR	2I 180 - 60 × 450	225 M		4		20,8
	86	42 200	2,8	MR	2I 200 - 60 × 450	225 M		4		20,3
	87,3	41 600	3,55	MR	2I 225 - 60 × 450	225 M		4		20
	96,8	37 500	1,7	MR	2I 160 - 60 × 450	225 M		4		18,1
	97,2	37 350	1,8	MR	2I 180 - 60 × 450	225 M		4		18
	99,5	36 450	3,35	MR	2I 200 - 60 × 450	225 M		4		17,6
	112	32 500	1,8	MR	2I 160 - 60 × 450	225 M		4		15,7
	105	34 450	2,24	MR	2I 180 - 60 × 450	225 M		4		16,6
	109	33 350	3,55	MR	2I 200 - 60 × 450	225 M		4		16,1
	124	29 150	1,8	MR	2I 160 - 60 × 450	225 M		4		14,1
	122	29 850	2,5	MR	2I 180 - 60 × 450	225 M		4		14,4
	126	28 850	3,75	MR	2I 200 - 60 × 450	225 M		4		13,9
	129	28 150	2	MR	2I 160 - 60 × 450	225 M		4		13,6
	128	28 300	2,8	MR	2I 180 - 60 × 450	225 M		4		13,6
	135	26 850	4,25	MR	2I 200 - 60 × 450	225 M		4		13
	147	24 650	2,5	MR	2I 160 - 60 × 450	225 M		4		11,9
	148	24 550	3	MR	2I 180 - 60 × 450	225 M		4		11,8
	170	21 350	2,8	MR	2I 160 - 60 × 450	225 M		4		10,3
	164	22 150	3,15	MR	2I 180 - 60 × 450	225 M		4		10,7
	189	19 150	2,8	MR	2I 160 - 60 × 450	225 M		4		9,24
	218	16 650	3,15	MR	2I 160 - 60 × 450	225 M		4		8,03
	273	13 300	3,15	MR	2I 160 - 60 × 450	225 M		4		6,41

Motor power P_1 hp 1)	Output speed n_2 rpm	Output torque T_2 lb in	Service factor f_S							Gear ratio i
75	13,8	321 800	1,12	MR	3I 320 - 65 × 550	250 M		4		127
	13,8	321 800	1,4	MR	3I 321 - 65 × 550	250 M		4		127
	13,4	331 500	1,9	MR	3I 360 - 65 × 550	250 M		4		131
	16,7	265 800	1,6	MR	3I 320 - 65 × 550	250 M		4		105
	16,7	265 800	2	MR	3I 321 - 65 × 550	250 M		4		105
	17	261 500	2,65	MR	3I 360 - 65 × 550	250 M		4		103
	19,4	228 800	1,7	MR	3I 320 - 65 × 550	250 M		4		90,1
	19,4	228 800	2,12	MR	3I 321 - 65 × 550	250 M		4		90,1
	18,9	235 300	3	MR	3I 360 - 65 × 550	250 M		4		92,7
	22,8	195 300	1,5	MR	3I 280 - 65 × 550	250 M		4		76,9
	21,2	209 500	2	MR	3I 320 - 65 × 550	250 M		4		82,5
	21,2	209 500	2,5	MR	3I 321 - 65 × 550	250 M		4		82,5
	21,6	206 000	3,35	MR	3I 360 - 65 × 550	250 M		4		81,1
	24,6	180 300	2,24	MR	3I 320 - 65 × 550	250 M		4		71
	24,6	180 300	2,8	MR	3I 321 - 65 × 550	250 M		4		71
	28,4	156 200	1,5	MR	3I 250 - 65 × 550	250 M		4		61,5
	27,9	159 300	2	MR	3I 280 - 65 × 550	250 M		4		62,7
	26,1	170 400	2,5	MR	3I 320 - 65 × 550	250 M		4		67,1
	26,1	170 400	3	MR	3I 321 - 65 × 550	250 M		4		67,1
	31,5	141 000	1,25	MR	3I 225 - 60 × 450	250 M	B5R	4		55,5
	31,5	141 200	1,7	MR	3I 250 - 65 × 550	250 M		4		55,6
	31,2	142 300	2,5	MR	3I 280 - 65 × 550	250 M		4		56
	30,3	146 600	2,65	MR	3I 320 - 65 × 550	250 M		4		57,8
	33,8	131 500	1,32	MR	3I 225 - 60 × 450	250 M	B5R	4		51,8
	33,9	131 200	1,8	MR	3I 250 - 65 × 550	250 M		4		51,7
	33,2	133 700	2,36	MR	3I 280 - 65 × 550	250 M		4		52,7
	33,1	134 200	3,15	MR	3I 320 - 65 × 550	250 M		4		52,9
	37,5	118 400	1,5	MR	3I 225 - 60 × 450	250 M	B5R	4		46,6
	37,5	118 600	2,12	MR	3I 250 - 65 × 550	250 M		4		46,7
	37,2	119 500	2,8	MR	3I 280 - 65 × 550	250 M		4		47,1
	43,3	102 600	1,8	MR	3I 225 - 60 × 450	250 M	B5R	4		40,4
	41,2	107 800	2,36	MR	3I 250 - 65 × 550	250 M		4		42,4
	42,5	104 500	3	MR	3I 280 - 65 × 550	250 M		4		41,2
	49,5	89 750	2	MR	3I 225 - 60 × 450	250 M	B5R	4		35,4
	47,4	93 700	2,65	MR	3I 250 - 65 × 550	250 M		4		36,9
	47,1	94 400	3,35	MR	3I 280 - 65 × 550	250 M		4		37,2
	57,1	77 750	2,12	MR	3I 225 - 60 × 450	250 M	B5R	4		30,6
	52,2	85 150	3	MR	3I 250 - 65 × 550	250 M		4		33,5
	53,8	82 600	3,75	MR	3I 280 - 65 × 550	250 M		4		32,5
	64,1	69 350	2,12	MR	3I 225 - 60 × 450	250 M	B5R	4		27,3
	61	72 900	3,15	MR	3I 250 - 65 × 550	250 M		4		28,7
	72,2	62 850	1,6	MR	2I 200 - 65 × 550	250 M		4		24,2
	70,1	64 750	2,24	MR	2I 225 - 65 × 550	250 M		4		25
	70	64 800	3,15	MR	2I 250 - 65 × 550	250 M		4		25
	79	57 450	1,9	MR	2I 200 - 65 × 550	250 M		4		22,2
	76,2	59 550	2,65	MR	2I 225 - 65 × 550	250 M		4		23
	79,6	57 000	3,55	MR	2I 250 - 65 × 550	250 M		4		22
	86	52 750	2,24	MR	2I 200 - 65 × 550	250 M		4		20,3
	87,3	51 950	2,8	MR	2I 225 - 65 × 550	250 M		4		20
	99,5	45 600	2,65	MR	2I 200 - 65 × 550	250 M		4		17,6
	96,9	46 800	3,35	MR	2I 225 - 65 × 550	250 M		4		18,1
	105	43 100	1,8	MR	2I 180 - 60 × 450	250 M	B5R	4		16,6
	109	41 700	2,8	MR	2I 200 - 65 × 550	250 M		4		16,1
	112	40 550	3,55	MR	2I 225 - 65 × 550	250 M		4		15,6
	122	37 350	2	MR	2I 180 - 60 × 450	250 M	B5R	4		14,4
	126	36 050	3	MR	2I 200 - 65 × 550	250 M		4		13,9
	120	37 900	4	MR	2I 225 - 65 × 550	250 M		4		14,6
	128	35 400	2,24	MR	2I 180 - 60 × 450	250 M	B5R	4		13,6
	135	33 600	3,35	MR	2I 200 - 65 × 550	250 M		4		13
	137	33 100	4,5	MR	2I 225 - 65 × 550	250 M		4		12,8
	148	30 650	2,5	MR	2I 180 - 60 × 450	250 M	B5R	4		11,8
	156	29 000	4	MR	2I 200 - 65 × 550	250 M		4		11,2
	164	27 700	2,5	MR	2I 180 - 60 × 450	250 M	B5R	4		10,7
	171	26 550	4,25	MR	2I 200 - 65 × 550	250 M		4		10,2

1) Powers valid for continuous duty S1; **increase possible** for duty cycles S2 ... S10 (see ch. 1 «General specifications»): in which case M_2 increases and f_S decreases.
2) For complete designation when ordering see ch. 2.
* Mounting position **B5R** (see ch. 1.2).

11 - Helical gearmotor selection tables

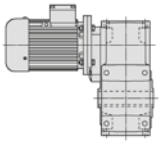

Motor power P_1 hp 1)	Output speed n_2 rpm	Output torque T_2 lb in	Service factor f_S						Gear ratio i
75	188	24 150	2,5	MR	2I 180 - 60 × 450	250 M	B5R	4	9,31
	198	22 950	4,75	MR	2I 200 - 65 × 550	250 M		4	8,85
	219	20 750	5	MR	2I 200 - 65 × 550	250 M		4	8,01
	273	16 650	5,6	MR	2I 200 - 65 × 550	250 M		4	6,42
100	13,4	442 000	1,4	MR	3I 360 - 75 × 550	280 S		4	131
	16,7	354 500	1,18	MR	3I 320 - 75 × 550	280 S		4	105
	16,7	354 500	1,5	MR	3I 321 - 75 × 550	280 S		4	105
	17	348 700	2	MR	3I 360 - 75 × 550	280 S		4	103
	19,4	305 100	1,32	MR	3I 320 - 75 × 550	280 S		4	90,1
	19,4	305 100	1,6	MR	3I 321 - 75 × 550	280 S		4	90,1
	18,9	313 800	2,24	MR	3I 360 - 75 × 550	280 S		4	92,7
	21,2	279 300	1,5	MR	3I 320 - 75 × 550	280 S		4	82,5
	21,2	279 300	1,9	MR	3I 321 - 75 × 550	280 S		4	82,5
	21,6	274 700	2,5	MR	3I 360 - 75 × 550	280 S		4	81,1
	24,6	240 400	1,7	MR	3I 320 - 75 × 550	280 S		4	71
	24,6	240 400	2,12	MR	3I 321 - 75 × 550	280 S		4	71
	24	247 200	2,65	MR	3I 360 - 75 × 550	280 S		4	73
	28,4	208 300	1,18	MR	3I 250 - 75 × 550	280 S		4	61,5
	27,9	212 300	1,5	MR	3I 280 - 75 × 550	280 S		4	62,7
	26,1	227 200	1,8	MR	3I 320 - 75 × 550	280 S		4	67,1
	26,1	227 200	2,24	MR	3I 321 - 75 × 550	280 S		4	67,1
	26,5	223 400	3	MR	3I 360 - 75 × 550	280 S		4	66
	31,5	188 300	1,32	MR	3I 250 - 75 × 550	280 S		4	55,6
	31,2	189 700	1,8	MR	3I 280 - 75 × 550	280 S		4	56
	30,3	195 500	2	MR	3I 320 - 75 × 550	280 S		4	57,8
	30,3	195 500	2,5	MR	3I 321 - 75 × 550	280 S		4	57,8
	29,5	201 100	3,15	MR	3I 360 - 75 × 550	280 S		4	59,4
	33,9	174 900	1,4	MR	3I 250 - 75 × 550	280 S		4	51,7
	33,2	178 300	1,7	MR	3I 280 - 75 × 550	280 S		4	52,7
	33,1	179 000	2,36	MR	3I 320 - 75 × 550	280 S		4	52,9
	33,1	179 000	2,8	MR	3I 321 - 75 × 550	280 S		4	52,9
	33,7	176 000	3,75	MR	3I 360 - 75 × 550	280 S		4	52
	37,5	158 100	1,5	MR	3I 250 - 75 × 550	280 S		4	46,7
	37,2	159 300	2	MR	3I 280 - 75 × 550	280 S		4	47,1
	38,5	154 000	2,65	MR	3I 320 - 75 × 550	280 S		4	45,5
	38,5	154 000	3,15	MR	3I 321 - 75 × 550	280 S		4	45,5
	41,2	143 700	1,8	MR	3I 250 - 75 × 550	280 S		4	42,4
	42,5	139 400	2,24	MR	3I 280 - 75 × 550	280 S		4	41,2
	43	137 900	3,15	MR	3I 320 - 75 × 550	280 S		4	40,7
	47,4	124 900	1,9	MR	3I 250 - 75 × 550	280 S		4	36,9
	47,1	125 900	2,5	MR	3I 280 - 75 × 550	280 S		4	37,2
	46,8	126 500	3,15	MR	3I 320 - 75 × 550	280 S		4	37,4
	52,2	113 600	2,24	MR	3I 250 - 75 × 550	280 S		4	33,5
	53,8	110 200	2,8	MR	3I 280 - 75 × 550	280 S		4	32,5
	61	97 200	2,36	MR	3I 250 - 75 × 550	280 S		4	28,7
	60,7	97 600	3	MR	3I 280 - 75 × 550	280 S		4	28,8
	72,2	83 800	1,18	MR	2I 200 - 75 × 550	280 S		4	24,2
	70,1	86 300	1,7	MR	2I 225 - 75 × 550	280 S		4	25
	70	86 400	2,36	MR	2I 250 - 75 × 550	280 S		4	25
	71,1	85 100	3,15	MR	2I 280 - 75 × 550	280 S		4	24,6
	79	76 600	1,4	MR	2I 200 - 75 × 550	280 S		4	22,2
	76,2	79 450	2	MR	2I 225 - 75 × 550	280 S		4	23
	79,6	76 050	2,8	MR	2I 250 - 75 × 550	280 S		4	22
	86	70 350	1,7	MR	2I 200 - 75 × 550	280 S		4	20,3
	87,3	69 300	2,12	MR	2I 225 - 75 × 550	280 S		4	20
	88,9	68 100	3,15	MR	2I 250 - 75 × 550	280 S		4	19,7
	99,5	60 800	2	MR	2I 200 - 75 × 550	280 S		4	17,6
	96,9	62 400	2,5	MR	2I 225 - 75 × 550	280 S		4	18,1
	98,3	61 550	3,55	MR	2I 250 - 75 × 550	280 S		4	17,8
	109	55 600	2,12	MR	2I 200 - 75 × 550	280 S		4	16,1
	112	54 050	2,65	MR	2I 225 - 75 × 550	280 S		4	15,6
	126	48 050	2,24	MR	2I 200 - 75 × 550	280 S		4	13,9
	120	50 550	3	MR	2I 225 - 75 × 550	280 S		4	14,6

Motor power P_1 hp 1)	Output speed n_2 rpm	Output torque T_2 lb in	Service factor f_S					Gear ratio i
100	135	44 800	2,5	MR	2I 200 - 75 × 550	280 S	4	13
	137	44 100	3,35	MR	2I 225 - 75 × 550	280 S	4	12,8
	156	38 700	3	MR	2I 200 - 75 × 550	280 S	4	11,2
	152	39 700	3,75	MR	2I 225 - 75 × 550	280 S	4	11,5
	171	35 400	3,15	MR	2I 200 - 75 × 550	280 S	4	10,2
	176	34 400	4,25	MR	2I 225 - 75 × 550	280 S	4	9,95
	198	30 600	3,55	MR	2I 200 - 75 × 550	280 S	4	8,85
	219	27 700	3,75	MR	2I 200 - 75 × 550	280 S	4	8,01
	273	22 200	4,25	MR	2I 200 - 75 × 550	280 S	4	6,42
125	16,7	443 100	1,18	MR	3I 321 - 75 × 550	280 M	4	105
	17	435 800	1,6	MR	3I 360 - 75 × 550	280 M	4	103
	19,4	381 300	1,06	MR	3I 320 - 75 × 550	280 M	4	90,1
	19,4	381 300	1,32	MR	3I 321 - 75 × 550	280 M	4	90,1
	18,9	392 200	1,8	MR	3I 360 - 75 × 550	280 M	4	92,7
	21,2	349 100	1,18	MR	3I 320 - 75 × 550	280 M	4	82,5
	21,2	349 100	1,5	MR	3I 321 - 75 × 550	280 M	4	82,5
	21,6	343 400	2	MR	3I 360 - 75 × 550	280 M	4	81,1
	24,6	300 500	1,32	MR	3I 320 - 75 × 550	280 M	4	71
	24,6	300 500	1,6	MR	3I 321 - 75 × 550	280 M	4	71
	24	309 000	2,12	MR	3I 360 - 75 × 550	280 M	4	73
	27,9	265 400	1,18	MR	3I 280 - 75 × 550	280 M	4	62,7
	26,1	283 900	1,5	MR	3I 320 - 75 × 550	280 M	4	67,1
	26,1	283 900	1,8	MR	3I 321 - 75 × 550	280 M	4	67,1
	26,5	279 300	2,5	MR	3I 360 - 75 × 550	280 M	4	66
	31,2	237 200	1,5	MR	3I 280 - 75 × 550	280 M	4	56
	30,3	244 400	1,6	MR	3I 320 - 75 × 550	280 M	4	57,8
	30,3	244 400	2	MR	3I 321 - 75 × 550	280 M	4	57,8
	29,5	251 400	2,5	MR	3I 360 - 75 × 550	280 M	4	59,4
	33,9	218 600	1,12	MR	3I 250 - 75 × 550	280 M	4	51,7
	33,2	222 800	1,4	MR	3I 280 - 75 × 550	280 M	4	52,7
	33,1	223 700	1,8	MR	3I 320 - 75 × 550	280 M	4	52,9
	33,1	223 700	2,36	MR	3I 321 - 75 × 550	280 M	4	52,9
	33,7	220 000	3	MR	3I 360 - 75 × 550	280 M	4	52
	37,5	197 600	1,25	MR	3I 250 - 75 × 550	280 M	4	46,7
	37,2	199 100	1,6	MR	3I 280 - 75 × 550	280 M	4	47,1
	38,5	192 500	2,12	MR	3I 320 - 75 × 550	280 M	4	45,5
	38,5	192 500	2,5	MR	3I 321 - 75 × 550	280 M	4	45,5
	37,4	198 000	3,15	MR	3I 360 - 75 × 550	280 M	4	46,8
	41,2	179 600	1,4	MR	3I 250 - 75 × 550	280 M	4	42,4
	42,5	174 200	1,8	MR	3I 280 - 75 × 550	280 M	4	41,2
	43	172 400	2,5	MR	3I 320 - 75 × 550	280 M	4	40,7
	43	172 400	3	MR	3I 321 - 75 × 550	280 M	4	40,7
	47,4	156 200	1,6	MR	3I 250 - 75 × 550	280 M	4	36,9
	47,1	157 400	2	MR	3I 280 - 75 × 550	280 M	4	37,2
	46,8	158 200	2,5	MR	3I 320 - 75 × 550	280 M	4	37,4
	46,8	158 200	3,15	MR	3I 321 - 75 × 550	280 M	4	37,4
	52,2	141 900	1,8	MR	3I 250 - 75 × 550	280 M	4	33,5
	53,8	137 700	2,24	MR	3I 280 - 75 × 550	280 M	4	32,5
	52,3	141 600	3,15	MR	3I 320 - 75 × 550	280 M	4	33,5
	61	121 500	1,9	MR	3I 250 - 75 × 550	280 M	4	28,7
	60,7	122 000	2,36	MR	3I 280 - 75 × 550	280 M	4	28,8
	58,3	127 100	3,35	MR	3I 320 - 75 × 550	280 M	4	30
	70,1	107 900	1,32	MR	2I 225 - 75 × 550	280 M	4	25
	70	108 000	1,9	MR	2I 250 - 75 × 550	280 M	4	25
	71,1	106 400	2,65	MR	2I 280 - 75 × 550	280 M	4	24,6
	70	108 000	3,15	MR	2I 320 - 75 × 550	280 M	4	25
	79	95 750	1,12	MR	2I 200 - 75 × 550	280 M	4	22,2
	76,2	99 300	1,6	MR	2I 225 - 75 × 550	280 M	4	23
	79,6	95 050	2,12	MR	2I 250 - 75 × 550	280 M	4	22
	79	95 750	3	MR	2I 280 - 75 × 550	280 M	4	22,2
	86	87 950	1,32	MR	2I 200 - 75 × 550	280 M	4	20,3
	87,3	86 600	1,7	MR	2I 225 - 75 × 550	280 M	4	20
	88,9	85 100	2,5	MR	2I 250 - 75 × 550	280 M	4	19,7
	87,2	86 750	3,35	MR	2I 280 - 75 × 550	280 M	4	20,1

1) Powers valid for continuous duty S1; **increase possible** for duty cycles S2 ... S10 (see ch. 1 «General specifications»): in which case M_2 increases and f_S decreases.
2) For complete designation when ordering see ch. 2.
* Mounting position **B5R** (see ch. 1.2)

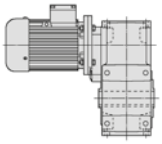

Motor power P_1 hp 1)	Output speed n_2 rpm	Output torque T_2 lb in	Service factor f_S							Gear ratio i
125	99,5	76 000	1,6	MR	2I 200 - 75 × 550	280 M		4		17,6
	96,9	78 000	2	MR	2I 225 - 75 × 550	280 M		4		18,1
	98,3	76 900	2,8	MR	2I 250 - 75 × 550	280 M		4		17,8
	109	69 500	1,7	MR	2I 200 - 75 × 550	280 M		4		16,1
	112	67 600	2,12	MR	2I 225 - 75 × 550	280 M		4		15,6
	108	69 900	3,15	MR	2I 250 - 75 × 550	280 M		4		16,2
	126	60 050	1,8	MR	2I 200 - 75 × 550	280 M		4		13,9
	120	63 200	2,36	MR	2I 225 - 75 × 550	280 M		4		14,6
	120	63 050	3,15	MR	2I 250 - 75 × 550	280 M		4		14,6
	135	55 950	2	MR	2I 200 - 75 × 550	280 M		4		13
	137	55 150	2,65	MR	2I 225 - 75 × 550	280 M		4		12,8
	134	56 450	3,75	MR	2I 250 - 75 × 550	280 M		4		13,1
	156	48 350	2,36	MR	2I 200 - 75 × 550	280 M		4		11,2
	152	49 650	3	MR	2I 225 - 75 × 550	280 M		4		11,5
	148	51 050	4,25	MR	2I 250 - 75 × 550	280 M		4		11,8
	171	44 250	2,5	MR	2I 200 - 75 × 550	280 M		4		10,2
	176	43 000	3,55	MR	2I 225 - 75 × 550	280 M		4		9,95
	163	46 400	4,75	MR	2I 250 - 75 × 550	280 M		4		10,7
	198	38 250	2,8	MR	2I 200 - 75 × 550	280 M		4		8,85
	219	34 600	3,15	MR	2I 200 - 75 × 550	280 M		4		8,01
	273	27 750	3,55	MR	2I 200 - 75 × 550	280 M		4		6,42
150	20,9	424 900	1,5	MR	3I 360 - 80 × 660	315 S		4		83,7
	26,1	340 700	1,25	MR	3I 320 - 80 × 660	315 S		4		67,1
	26,1	340 700	1,5	MR	3I 321 - 80 × 660	315 S		4		67,1
	26,5	335 200	2	MR	3I 360 - 80 × 660	315 S		4		66
	31,2	284 600	1,25	MR	3I 280 - 75 × 550	315 S	B5R	4		56
	30,3	293 300	1,32	MR	3I 320 - 80 × 660	315 S		4		57,8
	30,3	293 300	1,7	MR	3I 321 - 80 × 660	315 S		4		57,8
	29,5	301 600	2,12	MR	3I 360 - 80 × 660	315 S		4		59,4
	33,2	267 400	1,18	MR	3I 280 - 75 × 550	315 S	B5R	4		52,7
	33,1	268 500	1,5	MR	3I 320 - 80 × 660	315 S		4		52,9
	33,1	268 500	1,9	MR	3I 321 - 80 × 660	315 S		4		52,9
	33,7	264 100	2,5	MR	3I 360 - 80 × 660	315 S		4		52
	37,2	238 900	1,4	MR	3I 280 - 75 × 550	315 S	B5R	4		47,1
	38,5	231 100	1,7	MR	3I 320 - 80 × 660	315 S		4		45,5
	38,5	231 100	2,12	MR	3I 321 - 80 × 660	315 S		4		45,5
	37,4	237 700	2,65	MR	3I 360 - 80 × 660	315 S		4		46,8
	42,5	209 100	1,5	MR	3I 280 - 75 × 550	315 S	B5R	4		41,2
	43	206 800	2,12	MR	3I 320 - 80 × 660	315 S		4		40,7
	43	206 800	2,5	MR	3I 321 - 80 × 660	315 S		4		40,7
	41,4	214 500	3	MR	3I 360 - 80 × 660	315 S		4		42,3
	47,1	188 800	1,6	MR	3I 280 - 75 × 550	315 S	B5R	4		37,2
	46,8	189 800	2,12	MR	3I 320 - 80 × 660	315 S		4		37,4
	46,8	189 800	2,65	MR	3I 321 - 80 × 660	315 S		4		37,4
	45,5	195 200	3,15	MR	3I 360 - 80 × 660	315 S		4		38,4
	53,8	165 200	1,9	MR	3I 280 - 75 × 550	315 S	B5R	4		32,5
	52,3	169 900	2,5	MR	3I 320 - 80 × 660	315 S		4		33,5
	52,3	169 900	2,8	MR	3I 321 - 80 × 660	315 S		4		33,5
	50,4	176 200	3,55	MR	3I 360 - 80 × 660	315 S		4		34,7
	60,7	146 400	2	MR	3I 280 - 75 × 550	315 S	B5R	4		28,8
	58,3	152 500	2,8	MR	3I 320 - 80 × 660	315 S		4		30
	70	129 600	1,6	MR	2I 250 - 80 × 660	315 S		4		25
	71,1	127 700	2,12	MR	2I 280 - 80 × 660	315 S		4		24,6
	70	129 600	2,65	MR	2I 320 - 80 × 660	315 S		4		25
	79,6	114 000	1,8	MR	2I 250 - 80 × 660	315 S		4		22
	79	114 900	2,5	MR	2I 280 - 80 × 660	315 S		4		22,2
	76,6	118 500	3	MR	2I 320 - 80 × 660	315 S		4		22,8
	88,9	102 100	2,12	MR	2I 250 - 80 × 660	315 S		4		19,7
	87,2	104 100	2,8	MR	2I 280 - 80 × 660	315 S		4		20,1
	98,3	92 300	2,36	MR	2I 250 - 80 × 660	315 S		4		17,8
	97,6	93 000	3,15	MR	2I 280 - 80 × 660	315 S		4		17,9
	108	83 900	2,65	MR	2I 250 - 80 × 660	315 S		4		16,2
	112	81 400	3,55	MR	2I 280 - 80 × 660	315 S		4		15,7

Motor power P_1 hp 1)	Output speed n_2 rpm	Output torque T_2 lb in	Service factor f_S							Gear ratio i
150	120	75 850	2	MR	2I 225 - 75 × 550	315 S	B5R	4		14,6
	120	75 650	2,65	MR	2I 250 - 80 × 660	315 S		4		14,6
	119	76 250	3,55	MR	2I 280 - 80 × 660	315 S		4		14,7
	137	66 150	2,24	MR	2I 225 - 75 × 550	315 S	B5R	4		12,8
	134	67 750	3,15	MR	2I 250 - 80 × 660	315 S		4		13,1
	131	69 050	4,25	MR	2I 280 - 80 × 660	315 S		4		13,3
	152	59 600	2,5	MR	2I 225 - 75 × 550	315 S	B5R	4		11,5
	148	61 250	3,55	MR	2I 250 - 80 × 660	315 S		4		11,8
	176	51 600	2,8	MR	2I 225 - 75 × 550	315 S	B5R	4		9,95
	163	55 650	3,75	MR	2I 250 - 80 × 660	315 S		4		10,7
	197	46 050	3	MR	2I 225 - 75 × 550	315 S	B5R	4		8,88
175	20,9	495 700	1,25	MR	3I 360 - 80 × 660	315 M		4		83,7
	26,1	397 500	1,32	MR	3I 321 - 80 × 660	315 M		4		67,1
	26,5	391 000	1,7	MR	3I 360 - 80 × 660	315 M		4		66
	30,3	342 100	1,18	MR	3I 320 - 80 × 660	315 M		4		57,8
	30,3	342 100	1,4	MR	3I 321 - 80 × 660	315 M		4		57,8
	29,5	351 900	1,8	MR	3I 360 - 80 × 660	315 M		4		59,4
	33,1	313 200	1,32	MR	3I 320 - 80 × 660	315 M		4		52,9
	33,1	313 200	1,7	MR	3I 321 - 80 × 660	315 M		4		52,9
	33,7	308 100	2,12	MR	3I 360 - 80 × 660	315 M		4		52
	38,5	269 600	1,5	MR	3I 320 - 80 × 660	315 M		4		45,5
	38,5	269 600	1,8	MR	3I 321 - 80 × 660	315 M		4		45,5
	37,4	277 300	2,24	MR	3I 360 - 80 × 660	315 M		4		46,8
	43	241 300	1,8	MR	3I 320 - 80 × 660	315 M		4		40,7
	43	241 300	2,12	MR	3I 321 - 80 × 660	315 M		4		40,7
	41,4	250 300	2,5	MR	3I 360 - 80 × 660	315 M		4		42,3
	46,8	221 400	1,8	MR	3I 320 - 80 × 660	315 M		4		37,4
	46,8	221 400	2,24	MR	3I 321 - 80 × 660	315 M		4		37,4
	45,5	227 800	2,8	MR	3I 360 - 80 × 660	315 M		4		38,4
	52,3	198 200	2,24	MR	3I 320 - 80 × 660	315 M		4		33,5
	52,3	198 200	2,5	MR	3I 321 - 80 × 660	315 M		4		33,5
	50,4	205 600	3	MR	3I 360 - 80 × 660	315 M		4		34,7
	58,3	177 900	2,36	MR	3I 320 - 80 × 660	315 M		4		30
	58,3	177 900	2,8	MR	3I 321 - 80 × 660	315 M		4		30
	57,8	179 200	3,35	MR	3I 360 - 80 × 660	315 M		4		30,3
	70	151 200	1,32	MR	2I 250 - 80 × 660	315 M		4		25
	71,1	148 900	1,9	MR	2I 280 - 80 × 660	315 M		4		24,6
	70	151 200	2,24	MR	2I 320 - 80 × 660	315 M		4		25
	70	151 200	2,8	MR	2I 321 - 80 × 660	315 M		4		25
	68	155 800	3,75	MR	2I 360 - 80 × 660	315 M		4		25,7
	79,6	133 000	1,6	MR	2I 250 - 80 × 660	315 M		4		22
	79	134 000	2,12	MR	2I 280 - 80 × 660	315 M		4		22,2
	76,6	138 200	2,5	MR	2I 320 - 80 × 660	315 M		4		22,8
	76,6	138 200	3,15	MR	2I 321 - 80 × 660	315 M		4		22,8
	88,9	119 100	1,8	MR	2I 250 - 80 × 660	315 M		4		19,7
	87,2	121 400	2,36	MR	2I 280 - 80 × 660	315 M		4		20,1
	84,8	124 900	3	MR	2I 320 - 80 × 660	315 M		4		20,6
	98,3	107 700	2	MR	2I 250 - 80 × 660	315 M		4		17,8
	97,6	108 500	2,8	MR	2I 280 - 80 × 660	315 M		4		17,9
	98,5	107 500	3,55	MR	2I 320 - 80 × 660	315 M		4		17,8
	108	97 850	2,24	MR	2I 250 - 80 × 660	315 M		4		16,2
	112	94 950	3	MR	2I 280 - 80 × 660	315 M		4		15,7
	110	96 250	4,25	MR	2I 320 - 80 × 660	315 M		4		15,9
	120	88 300	2,24	MR	2I 250 - 80 × 660	315 M		4		14,6
	119	88 950	3	MR	2I 280 - 80 × 660	315 M		4		14,7
	134	79 050	2,65	MR	2I 250 - 80 × 660	315 M		4		13,1
	131	80 600	3,55	MR	2I 280 - 80 × 660	315 M		4		13,3
	148	71 450	3	MR	2I 250 - 80 × 660	315 M		4		11,8
	147	72 000	4	MR	2I 280 - 80 × 660	315 M		4		11,9
	163	64 950	3,35	MR	2I 250 - 80 × 660	315 M		4		10,7
	168	63 000	4,75	MR	2I 280 - 80 × 660	315 M		4		10,4
	190	55 600	3,75	MR	2I 250 - 80 × 660	315 M		4		9,19

1) Powers valid for continuous duty S1; **increase possible** for duty cycles S2 ... S10 (see ch. 1 «General specifications»): in which case M_2 increases and f_S decreases.
2) For complete designation when ordering see ch. 2.
* Mounting position **B5R** (see ch. 1.2.2)

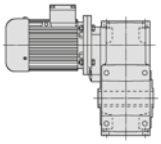

Motor power P_1 hp 1)	Output speed n_2 rpm	Output torque T_2 lb in	Service factor f_S		Gear ratio i
200	**26,5**	446 900	1,5	**MR 3I 360 - 80 × 660** 315 MC 4	66
	30,3	391 000	1,25	**MR 3I 321 - 80 × 660** 315 MC 4	57,8
	29,5	402 200	1,6	**MR 3I 360 - 80 × 660** 315 MC 4	59,4
	33,1	357 900	1,4	**MR 3I 321 - 80 × 660** 315 MC 4	52,9
	33,7	352 100	1,8	**MR 3I 360 - 80 × 660** 315 MC 4	52
	38,5	308 100	1,32	**MR 3I 320 - 80 × 660** 315 MC 4	45,5
	38,5	308 100	1,6	**MR 3I 321 - 80 × 660** 315 MC 4	45,5
	37,4	316 900	2	**MR 3I 360 - 80 × 660** 315 MC 4	46,8
	43	275 800	1,6	**MR 3I 320 - 80 × 660** 315 MC 4	40,7
	43	275 800	1,8	**MR 3I 321 - 80 × 660** 315 MC 4	40,7
	41,4	286 100	2,24	**MR 3I 360 - 80 × 660** 315 MC 4	42,3
	46,8	253 100	1,6	**MR 3I 320 - 80 × 660** 315 MC 4	37,4
	46,8	253 100	1,9	**MR 3I 321 - 80 × 660** 315 MC 4	37,4
	45,5	260 300	2,36	**MR 3I 360 - 80 × 660** 315 MC 4	38,4
	52,3	226 500	1,9	**MR 3I 320 - 80 × 660** 315 MC 4	33,5
	52,3	226 500	2,12	**MR 3I 321 - 80 × 660** 315 MC 4	33,5
	50,4	235 000	2,65	**MR 3I 360 - 80 × 660** 315 MC 4	34,7
	58,3	203 300	2,12	**MR 3I 320 - 80 × 660** 315 MC 4	30
	58,3	203 300	2,36	**MR 3I 321 - 80 × 660** 315 MC 4	30
	57,8	204 900	3	**MR 3I 360 - 80 × 660** 315 MC 4	30,3
	71,1	170 200	1,6	**MR 2I 280 - 80 × 660** 315 MC 4	24,6
	70	172 800	2	**MR 2I 320 - 80 × 660** 315 MC 4	25
	70	172 800	2,5	**MR 2I 321 - 80 × 660** 315 MC 4	25
	68	178 000	3,35	**MR 2I 360 - 80 × 660** 315 MC 4	25,7
	79	153 200	1,9	**MR 2I 280 - 80 × 660** 315 MC 4	22,2
	76,6	158 000	2,24	**MR 2I 320 - 80 × 660** 315 MC 4	22,8
	76,6	158 000	2,8	**MR 2I 321 - 80 × 660** 315 MC 4	22,8
	74,9	161 500	3,75	**MR 2I 360 - 80 × 660** 315 MC 4	23,4
	87,2	138 800	2,12	**MR 2I 280 - 80 × 660** 315 MC 4	20,1
	84,8	142 800	2,65	**MR 2I 320 - 80 × 660** 315 MC 4	20,6
	84,8	142 800	3,55	**MR 2I 321 - 80 × 660** 315 MC 4	20,6
	97,6	124 000	2,5	**MR 2I 280 - 80 × 660** 315 MC 4	17,9
	98,5	122 900	3,15	**MR 2I 320 - 80 × 660** 315 MC 4	17,8
	112	108 500	2,65	**MR 2I 280 - 80 × 660** 315 MC 4	15,7
	110	110 000	3,75	**MR 2I 320 - 80 × 660** 315 MC 4	15,9
	119	101 600	2,65	**MR 2I 280 - 80 × 660** 315 MC 4	14,7
	131	92 100	3,15	**MR 2I 280 - 80 × 660** 315 MC 4	13,3
	147	82 300	3,55	**MR 2I 280 - 80 × 660** 315 MC 4	11,9
	168	72 000	4	**MR 2I 280 - 80 × 660** 315 MC 4	10,4
	190	63 800	4,25	**MR 2I 280 - 80 × 660** 315 MC 4	9,22

1) Powers valid for continuous duty S1; **increase possible** for duty cycles S2 ... S10 (see ch. 1 «General specifications»): in which case M_2 increases and f_S decreases.
2) For complete designation when ordering see ch. 2.
* Mounting position **B5R** (see ch. 1.2)

12 – Dimensions, designs, mounting positions of helical gearmotors

12.1 - Gearmotors MR 2I 228

Dimensions 228
Designs (direction of rotation) 230
Mounting positions 231
Lubrication details 232

12.2 - Gearmotors MR 3I 234

Dimensions 234
Designs (direction of rotation) 236
Mounting positions 237
Lubrication details 238

12.3 - Gearmotors MR 4I 240

Dimensions 240
Designs (direction of rotation) 241
Mounting positions 242
Lubrication details 243

12.4 - Gearmotors MR 2I – Long model 244

Dimensions 244
Designs (direction of rotation) 246
Mounting positions 247
Lubrication details 248

12.5 - Gearmotors MR 3I – Long model 250

Dimensions 250
Designs (direction of rotation) 252
Mounting positions 253
Lubrication details 254

Important note.

In the following pages, the gearmotor weight and dimensions X, Y, Y_2, W, W_1, W_2 are referred to the aluminium light alloy frame IEC electric motor of cat. TX11, up to motor size 132 included. For higher motor sizes these values are approximate and may vary according to the specific motor adopted; consult us, if need be.

The dimensions are expressed in mm

12.1 - Gearmotors MR 2I

Dimensions

MR 2I 40 ... 125

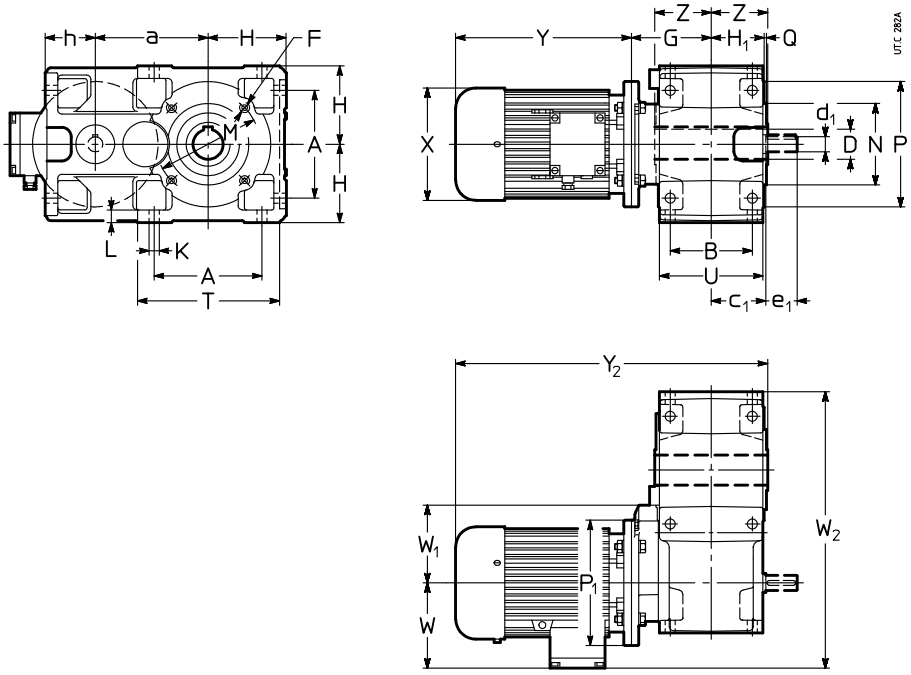

Red.	Mot. B5	a	A	B	c_1	D Ø H7	d_1 Ø	e_1	F 1)	G	H h11	H_1	h h11	K Ø	L	M Ø	N Ø h6	P Ø	Q	T	U	Z	P_1 Ø	X Ø ≈	Y ≈	Y ≈ 2)	Y_2 ≈	Y_2 ≈ 2)	W ≈	W_1	W_2 ≈	lb	lb 2)
40	63	73.5	73	65	43	19	11	23	M5	69.5	56	41.5	40.5	7	10	75	60	90	2.5	102	80	46	140	123	189	244	305	360	95	56	225	26	31
	71 6)																						140	138	235	297	351	413	112	56	242	31	37
50	63	90	86	75	51	24	14	30	M6	77	67	49	50	9.5	12	85	70	105	2.5	120	95	53	140	123	189	244	319	374	95	70	252	35	40
	71									79													160	138	216	278	348	410	112	80	269	40	46
	80 6)																						160	156	254	323	386	455	121	80	278	49	57
63	71	113	102	90	61	30	16	30	M8	90	80	58.5	62	11.5	14	100	80	120	3	143	114	63	160	138	216	278	369	431	112	80	307	51	57
64	80	(63)				(63)																	200	156	233	302	386	455	121	100	316	62	71
	90	115				32																	200	176	287	366	440	519	141	100	336	75	88
	100 5)	(64)				(64)																	200	194	337	432	490	585	151	100	346	84	99
80	90	142.5	132	106	72	38	19	40	M10	108	100	69.5	70	14	17	130	110	160	3.5	180	135	75	200	176	287	366	470	549	141	100	384	101	115
81	100 4)					(80)																	250	194	310	405	493	588	151	125	394	110	126
	112 4)					40 (81)																	250	218	336	435	519	618	163	125	406	139	159
100	90	180	172	131	87	48	24	50	M12	130	125	84.5	80	16	20	165	130	200	3.5	228	165	90	200	176	287	366	507	586	141	125	446	148	161
	100																						250	194	310	405	530	625	151	125	456	157	172
	112																						250	218	336	435	556	655	163	125	468	185	205
	132 4)									150													300	257	445	553	685	793	194	150	499	262	289
125	112	225	212	162	107	60	28	60	3)	159	150	103.5	100	18	23	215	180	250	4	274	201	110	250	218	336	435	605	704	163	166	538	260	280
	132									164													300	257	445	553	719	827	194	166	569	337	364
	160									179													350	315	539	640	828	929	241	175	616	439	450
	180																						350	354	613	734	902	1023	278	175	653	569	547

1) Working length of thread 2 · F.
2) Values valid for brake motor.
3) For dimension, number and angular position see ch. 6.
4) On request for 100LB 4, 112M 4 and 132M 4 also mounting position **B5R** (see ch. 1.2; dimensions Y and Y_2 increase by 27 mm, 26 mm and 35 mm, respectively).
5) Mounting position **B5R** (see ch. 1.2).
6) Mounting position **B5A** (see ch. 1.2).

MR 2I 140 ... 360

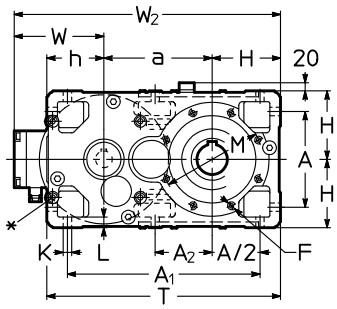

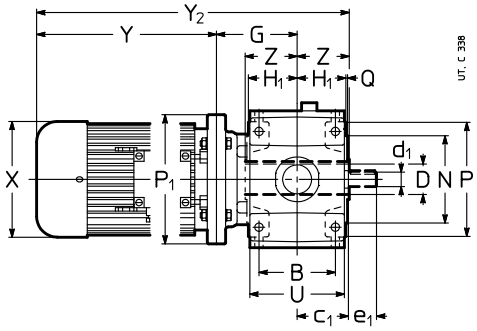

Red.	Mot.	a	A	A_1	A_2	B	c_1	D Ø H7	d_1 Ø	e_1	F 1)	G	H h11	H_1	h h11	K Ø	L	M Ø	N Ø h6 Q	P Ø	T U	Z	P_1 Ø	X Ø ≈	Y ≈	Y ≈ 2)	Y_2 ≈	Y_2 ≈ 2)	W ≈	W_2 ≈	lb	lb 2)
140	**132**	240	212	427	127	162	107	70	28	60	4)	159	150	103,5	125	18	23	265	230	300	515	125	300	257	445	553	729	837	194	584	408	434
	160											179							4		201		350	315	539	640	843	944	241	631	509	520
	180																						350	354	613	734	917	1038	278	668	639	617
	200																						350	354	654	734	958	1038	278	668	697	670
160	**160**	285	252	507	–	201	132	80	38	80	M16	204	180	128,5	150	22	28	265	230	300	615	136	350	315	539	640	879	980	241	706	659	670
	180																		4		249		350	354	613	734	953	1074	278	743	789	767
	200											194											400	354	654	734	984	1064	278	743	847	820
	225											224											450	411	710	–	1070	–	298	763	1047	–
180	**180**	305	252	527	170	201	132	90	38	80	M16	204	180	128,5	150	22	28	300	250	350	635	150	350	354	613	734	967	1088	278	763	829	807
	200											194							5		249		400	354	654	734	998	1078	278	763	886	860
	225											224											450	411	710	–	1084	–	298	783	1087	–
	250																						450	411	735	–	1109	–	298	783	1139	–
200	**200**	360	320	635	–	250	162	100	48	110	4)	225	225	158	180	27	34	350	300	400	765	167	400	354	654	734	1046	1126	278	863	1140	1113
	225											255							5		307		450	411	710	–	1132	–	298	883	1340	–
	250																						550	411	735	–	1157	–	298	883	1391	–
	280																						550	490	819	–	1241	–	360	945	1801	–
225	**225**	385	320	660	223	250	162	110	48	110	M20	255	225	158	180	27	34	400	350	450	790	180	450	411	710	–	1145	–	298	908	1409	–
	250																		5		307		550	411	735	–	1170	–	298	908	1459	–
	280																						550	490	819	–	1254	–	360	970	1870	–
	315[3]																						550	490	820	–	1255	–	360	970	1784	–
250	**250**	450	396	791	–	310	200	125	55	110	4)	290	280	195	225	33	42	500	450	550	955	206	550	411	735	–	1231	–	298	1028	1907	–
	280																		5		380		550	490	819	–	1315	–	360	1090	2317	–
	315											310											660	604	962	–	1478	–	445	1175	2866	–
280	**280**	480	396	821	277	310	200	140	55	110	M24	290	280	195	225	33	42	500	450	550	985	222	550	490	819	–	1331	–	360	1120	2436	–
	315											310							5		380		660	604	962	–	1494	–	445	1205	2985	–
320	**280**	570	510	1005	–	386	245	160	70	140	4)	336	355	241	280	39	52	600	550	660	1205	254	550	490	819	–	1409	–	360	1285	3225	–
321	**315**											356							6		470		660	604	962	–	1570	–	445	1370	3772	–
360	**315**	610	510	1045	358	386	245	180	70	140	M30	356	355	241	280	39	52	600	550	660	1245	273	660	604	962	–	1591	–	445	1410	3982	–
																			6		470											–

∗ Machined surface and N.4 threaded holes (dimensions in ch. 6 «Gear reducer input face»).
1) Working length of thread 2 · F.
2) Values valid for brake motor.
3) Mounting position **B5R** (see ch. 1.2).
4) For dimension, number and angular position see ch. 6.

Designs[1] (direction of rotation)

MR 2I 40 ... 125

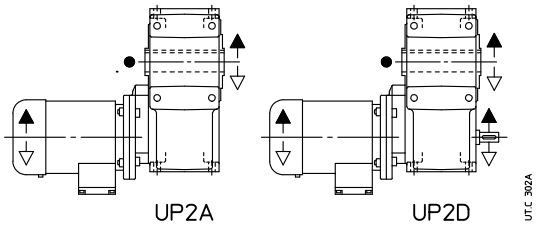

MR 2I 140 ... 360

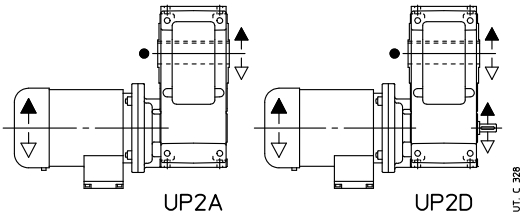

● Position of reference groove (see ch. 6) for radial load verification.
1) For motor design see ch. 2.

Mounting positions

Unless otherwise stated, gear reducers are supplied in mounting position **B3** (see ch. 2).

MR 2I 40 ... 125

Designs:

UP2A
UP2D

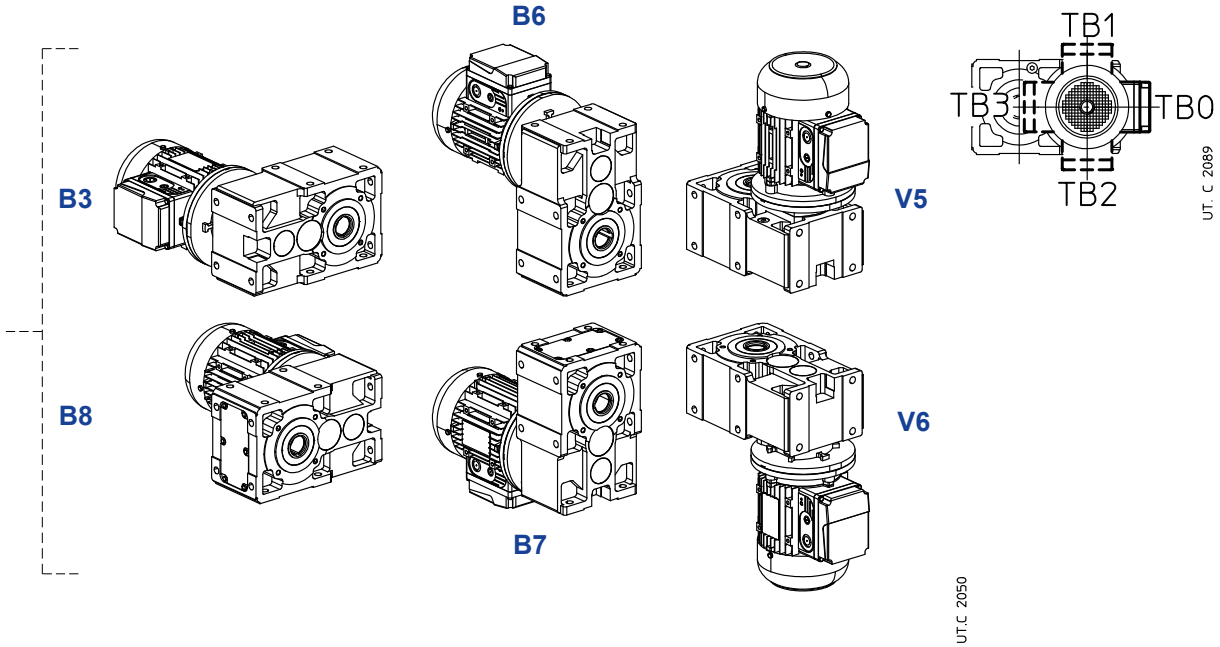

MR 2I 140 ... 360

Designs:

UP2A
UP2D

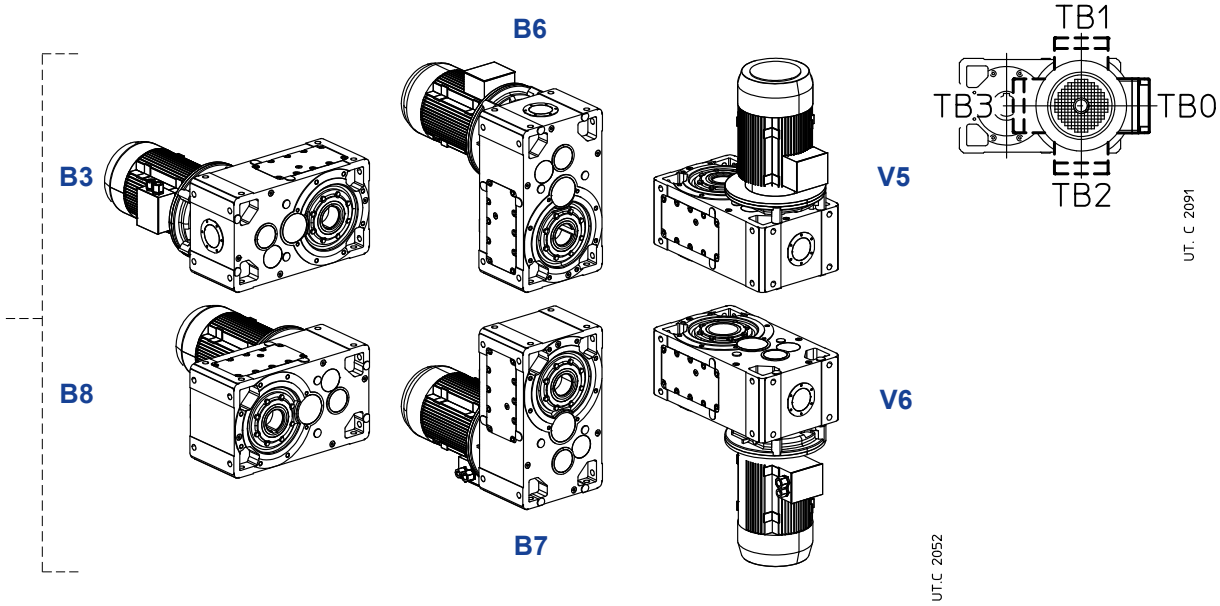

Oil quantity MR 2I 40 ... 360

Stated oil quantities [gal] are approximate for provisioning. The exact oil quantity the gear reducer is to be filled with is defined by the level plug.

Mounting position	40	50	63, 64	80, 81	100	125	140	160	180	200	225	250	280	320, 321	360
B3	0.11	0.16	0.24	0.4	0.77	1.5	1.7	3.2	3.4	6.6	6.9	12	13	26	26
B8	0.11	0.16	0.24	0.4	0.77	1.5	1.7	3.2	3.4	6.6	6.9	12	13	26	26
B6	0.15	0.21	0.32	0.61	1.3	2.4	2.6	4.8	5	9.2	9.8	18	19	36	37
B7	0.15	0.21	0.32	0.61	1.3	2.4	2.6	4.8	5	9.2	9.8	18	19	36	37
V5	0.15	0.21	0.32	0.61	1.3	2.4	2.6	4.8	5	9.2	9.8	18	19	36	37
V6	0.15	0.21	0.32	0.61	1.3	2.4	2.6	4.8	5	9.2	9.8	18	19	36	37

Lubrication details

MR 2I 100, 125

Designs:

UP2A
UP2D

B3

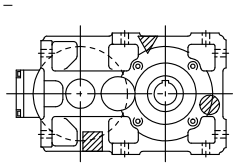

B6

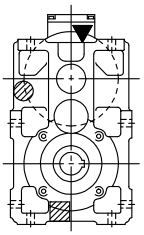

V5

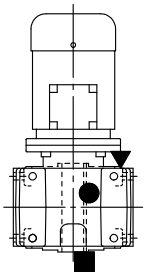

B8

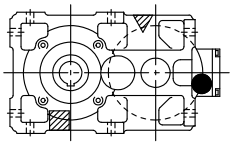

B7

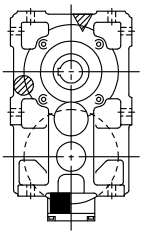

V6

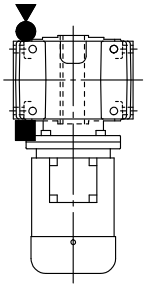

UTC 1053

MR 2I 140 ... 360

Designs:

UP2A
UP2D

B3

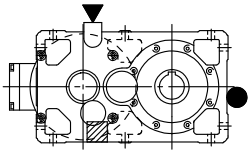

B6

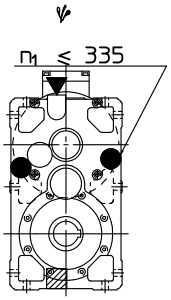

V5

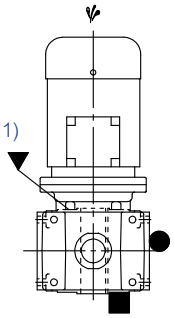

B8

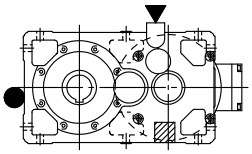

B7

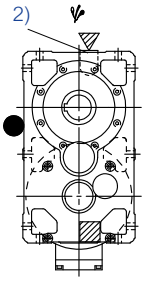

V6

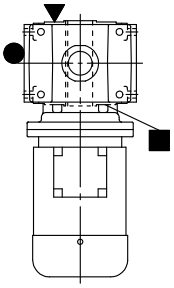

UTC 1054A

1) Oil filler plug possible even on low speed shaft side.
2) Oil filler plug possible even on opposite side.

Possible high oil splash: for the corrective factor f_{t_3} of nominal thermal power P_{t_N} see ch. 4.

▼ oil filler plug
● oil level plug
■ oil drain plug
▼● oil filler plug with oil level dip stick

▽ oil filler plug on opposite side (not in view)
◍ oil level plug on opposite side (not in view)
▨ oil drain plug on opposite side (not in view)

This page is intentionally left blank.

12.2 - Gearmotors MR 3I

Dimensions

MR 3I 40 ... 125

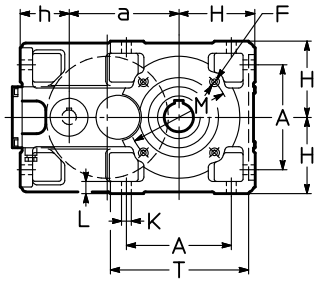

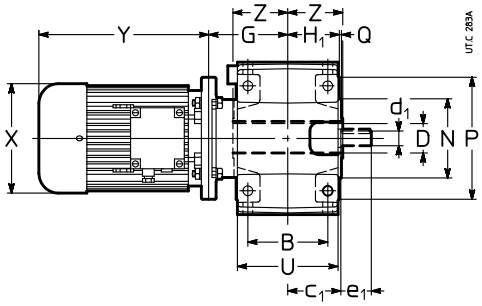

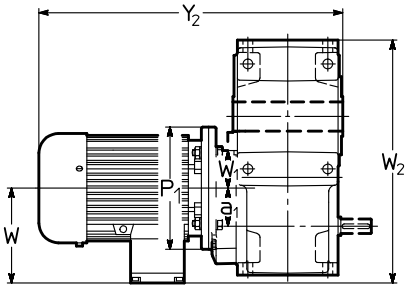

Red.	Mot.	a / a1	A	B	c1	D Ø H7	d1 Ø	e1	F 1)	G	H h11	H1	h h11	K Ø	L	M Ø	N Ø h6	P Ø	Q	T	U	Z	P1 Ø	X Ø ≈	Y ≈	Y ≈ 2)	Y2 ≈	Y2 ≈ 2)	W ≈	W1	W2 ≈	lb	lb 2)
	B5	**a1**							1)																	2)		2)					2)
40	**63**	73.5 30	73	65	43	19	11	23	M5	69.5	56	41.5	40.5	7	10	75	60	90	2.5	102	80	46	140	123	189	244	305	360	95	26	194.5	31	35
50	**63** **71**	90 32	86	75	51	24	14	30	M6	77 79	67	49	50	9.5	12	85	70	105	2.5	120	95	53	140 160	123 138	189 216	244 278	319 348	374 410	95 112	35 35	220 237	42 49	46 55
63 **64**	**63** **71** **80** **90**[4]	113 **(63)** 115 **(64)** 40	102	90	61	30 **(63)** 32 **(64)**	16	30	M8	90	80	58.5	62	11.5	14	100	80	120	3	143	114	63	140 160 200 200	123 138 156 176	189 216 233 287	244 278 302 387	342 369 386 440	397 431 455 540	95 112 121 141	40 40 40 40	257 267 276 296	53 60 71 84	57 66 79 97
80 **81**	**71** **80** **90** **100**[4]	142.5 50	132	106	72	38 **(80)** 40 **(81)**	19	40	M10	108	100	69.5	70	14	17	130	110	160	3.5	180	135	75	160 200 200 200	138 156 176 194	216 233 287 337	278 302 366 432	399 416 470 520	461 485 549 615	112 121 141 151	50 50 50 50	312.5 313.5 333.5 343.5	77 88 101 115	84 97 115 130
100	**80** **90** **100** **112**	180 62.5	172	131	87	48	24	50	M12	130	125	84.5	80	16	20	165	130	200	3.5	228	165	90	200 200 250 250	156 176 194 218	233 287 310 336	302 366 405 435	453 507 530 556	522 586 625 655	121 141 151 163	62 62 62 62	385 385 393.5 405.5	137 150 159 187	146 163 174 207
125	**90** **100** **112** **132**	225 80	212	162	107	60	28	60	3)	159 164	150	103.5	100	18	23	215	180	250	4	274	201	110	200 250 250 300	176 194 218 257	287 310 336 445	366 405 435 553	556 579 605 719	635 674 704 827	141 151 163 194	86 86 86 86	475 475 475 489	240 249 278 355	254 265 298 381

1) Working length of thread 2 · F.
2) Values valid for brake motor.
3) For dimension, number and angular position see ch. 6.
4) Mounting position **B5R** (see ch. 1.2).

MR 3I 140 ... 360

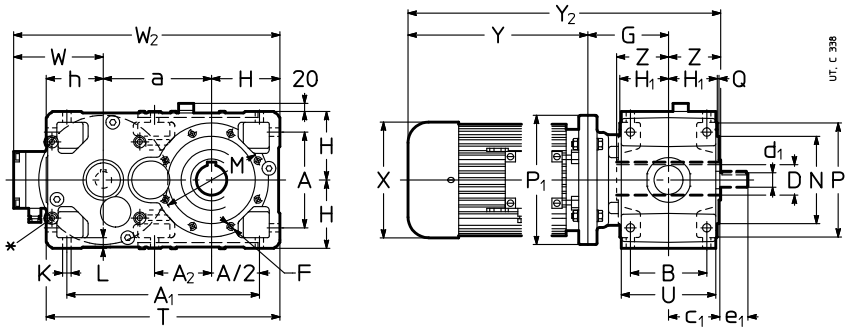

Red.	Mot. B5	a	A	A_1	A_2	B	c_1	D Ø H7	d_1 Ø	e_1	F 1)	G	H h11	H_1	h h11	K Ø	L	M Ø	N Ø h6 Q	P Ø	T U	Z	P_1 Ø	X Ø ≈	Y ≈	Y ≈ 2)	Y_2 ≈	Y_2 ≈ 2)	W ≈	W_2 ≈	lb	lb 2)
140	**100**	240	212	427	127	162	107	70	24	50	4)	134	150	103,5	125	18	23	265	230	300	515	125	250	194	310	405	569	664	151	541	302	317
	112																		4		201		250	218	336	435	595	694	163	553	320	344
	132											159											300	257	445	553	729	837	194	584	408	434
	160[3]																						300	315	539	640	843	944	241	631	509	520
160	**100**	285	252	507	–	201	132	80	28	60	M16	179	180	128,5	150	22	28	265	230	300	615	136	250	194	310	405	625	720	151	616	452	467
	112																		4		249		250	218	336	435	651	750	163	628	470	494
	132																						300	257	445	553	760	868	194	659	558	584
	160											204											350	315	539	640	879	980	241	706	659	670
	180																						350	354	613	734	953	1074	278	743	789	767
180	**112**	305	252	527	170	201	132	90	28	60	M16	179	180	128,5	150	22	28	300	250	350	635	150	250	218	336	435	665	764	163	648	509	534
	132																		5		249		300	257	445	553	774	882	194	679	597	624
	160											204											350	315	539	640	893	994	241	726	699	710
	180											194											350	354	613	734	967	1088	278	763	829	807
	200[3]																						350	354	654	734	998	1078	278	763	886	860
200	**132**	360	320	635	–	250	162	100	35	80	4)	225	225	158	180	27	34	350	300	400	765	167	300	257	445	553	837	945	194	779	851	877
	160																		5		307		350	315	539	640	931	1032	241	826	952	963
	180																						350	354	613	734	1005	1126	278	863	1082	1060
	200																						400	354	654	734	1046	1126	278	863	1140	1113
	225											255											450	411	710	–	1132	–	298	883	1340	–
225	**132**	385	320	660	223	250	162	110	35	80	M20	225	225	158	180	27	34	400	350	450	790	180	300	257	445	553	850	958	194	804	919	946
	160																		5		307		350	315	539	640	944	1045	241	851	1021	1032
	180																						350	354	613	734	1018	1139	278	888	1151	1129
	200																						400	354	654	734	1059	1139	278	888	1208	1182
	225											255											450	411	710	–	1145	–	298	908	1409	–
	250[3]																						450	411	710	–	1145	–	298	908	1459	–
250	**160**	450	396	791	–	310	200	125	45	110	4)	260	280	195	225	33	42	500	450	550	955	206	350	315	539	640	1005	1106	241	971	1468	1479
	180																		5		380		350	354	613	734	1079	1200	278	1008	1598	1576
	200																						400	354	654	734	1120	1200	278	1008	1656	1629
	225											290											450	411	710	–	1206	–	298	1028	1856	–
	250																						550	411	735	–	1231	–	298	1028	1907	–
	280																						550	490	819	–	1315	–	360	1090	2317	–
280	**160**	480	396	821	277	310	200	140	45	110	M24	260	280	195	225	33	42	500	450	550	985	222	350	315	539	640	1021	1122	241	1001	1587	1598
	180																		5		380		350	354	613	734	1095	1216	278	1038	1717	1695
	200																						400	354	654	734	1136	1216	278	1038	1775	1748
	225											290											450	411	710	–	1222	–	298	1058	1975	–
	250																						550	411	735	–	1247	–	298	1058	2026	–
	280											310											550	490	819	–	1331	–	360	1120	2436	–
	315[3]																						550	490	820	–	1352	–	360	1120	2985	–
320	**200**	570	510	1005	–	386	245	160	55	110	4)	326	355	241	280	39	52	600	550	660	1205	254	400	354	654	734	1234	1314	278	1205	2564	2538
321	**225**																		6		470		450	411	710	–	1290	–	298	1223	2765	–
	250											336											550	411	735	–	1325	–	298	1223	2815	–
	280																						550	490	819	–	1409	–	360	1285	3225	–
	315											356											660	604	962	–	1570	–	445	1370	3772	–
360	**200**	610	510	1045	358	386	245	180	55	110	M30	326	355	241	280	39	52	600	550	660	1245	273	400	354	654	734	1253	1333	278	1245	2773	2747
	225																		6		470		450	411	710	–	1309	–	298	1263	2974	–
	250											336											550	411	735	–	1344	–	298	1263	3025	–
	280																						550	490	819	–	1428	–	360	1325	3435	–
	315											356											660	604	962	–	1591	–	445	1410	3982	–

∗ Machined surface and N.4 threaded holes (dimensions in ch. 6 «Gear reducer input face»).
1) Working length of thread 2 · F.
2) Values valid for brake motor.
3) For mounting position **B5R** (see ch. 1.2), brake motor is not possible. Moreover for size **315S** the following dimensions will be reduced **X**: Ø490, dimension **Y**: 820, dimension **W**: 360, mass: 1102 kg.
4) For dimension, number and angular position see ch. 6.

Designs[1] (direction of rotation)

MR 3I 40 ... 125

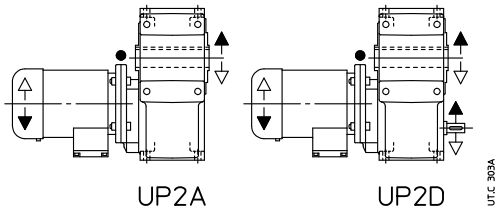

MR 3I 140 ... 360

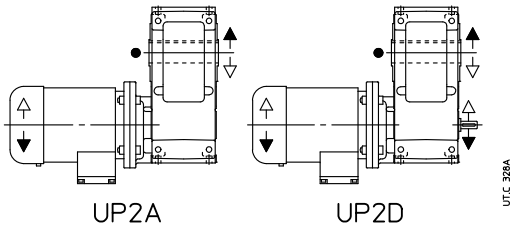

● Position of reference groove (see ch. 6) for radial load verification.
1) For motor design see ch. 2.

Mounting positions

Unless otherwise stated, gear reducers are supplied in mounting position **B3** (see ch. 2).

MR 3I 40 ... 125

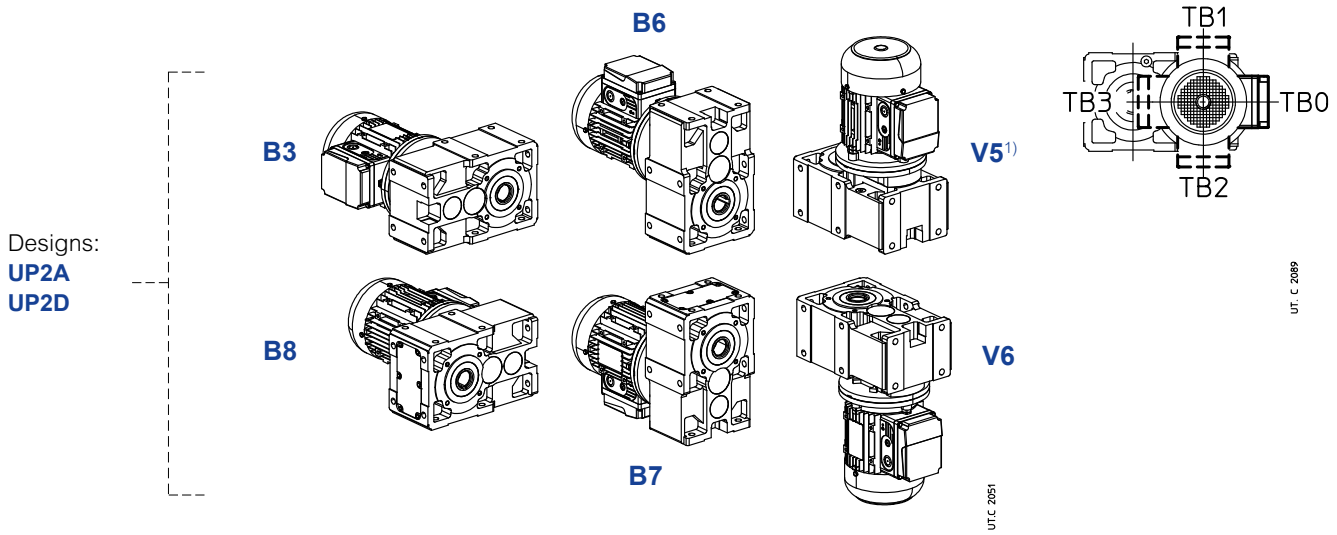

MR 3I 140 ... 360

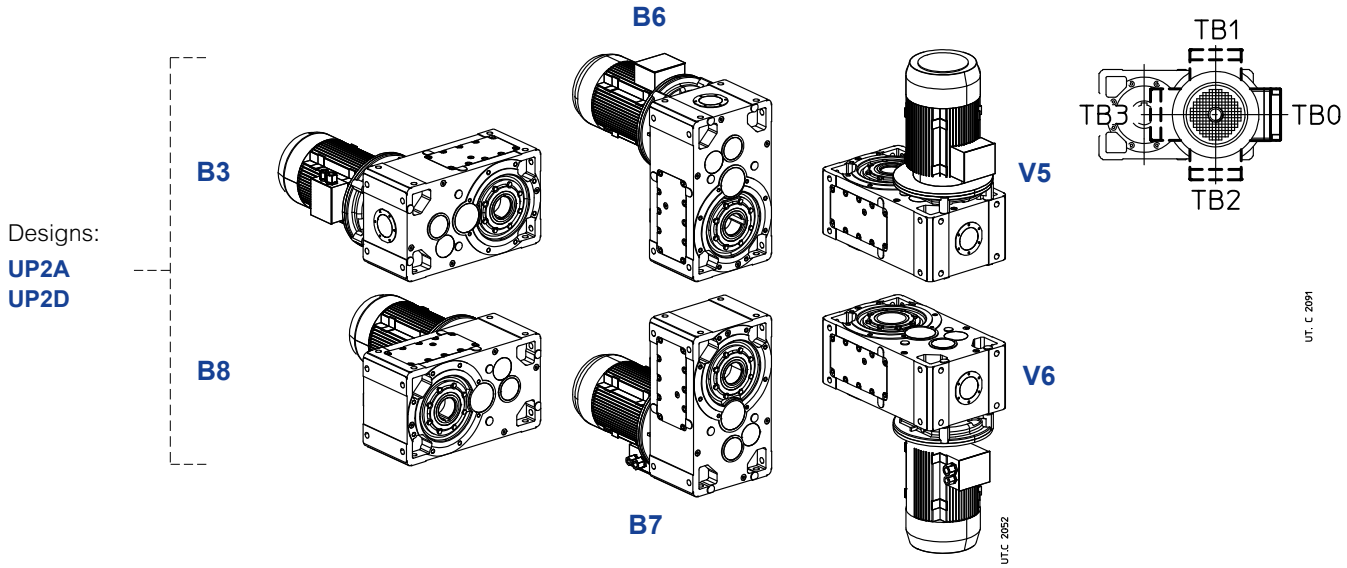

Oil quantity MR 3I 40 ... 360

Lubricant quantities [gal] stated in the table are approximate for provisioning. The exact oil quantity the gear reducer is to be filled with is defined by the level plug.

Mounting position	40	50	63, 64	80, 81	100	125	140	160	180	200	225	250	280	320, 321	360
B3	0.12	0.18	0.26	0.45	0.87	1.6	1.7	3.2	3.4	6.6	6.9	12	13	26	26
B8	0.12	0.18	0.26	0.45	0.87	1.6	2.6	4.8	5	9.2	9.8	18	19	36	37
B6	0.15	0.28	0.4	0.77	1.5	2.7	2.6	4.8	5	9.2	9.8	18	19	36	37
B7	0.15	0.24	0.34	0.66	1.3	2.3	2.6	4.8	5	9.2	9.8	18	19	36	37
V5[1)]	0.15	0.24	0.34	0.66	1.3	2.3	2.6	4.8	5	9.2	9.8	18	19	36	37
V6	0.15	0.24	0.34	0.66	1.3	2.3	2.6	4.8	5	9.2	9.8	18	19	36	37

1) For sizes 40 ... 125, the first reduction stage is grease lubricated «for life» (quantity 5% the oil one).

Lubrication details

MR 3I 100, 125

Designs:
UP2A
UP2D

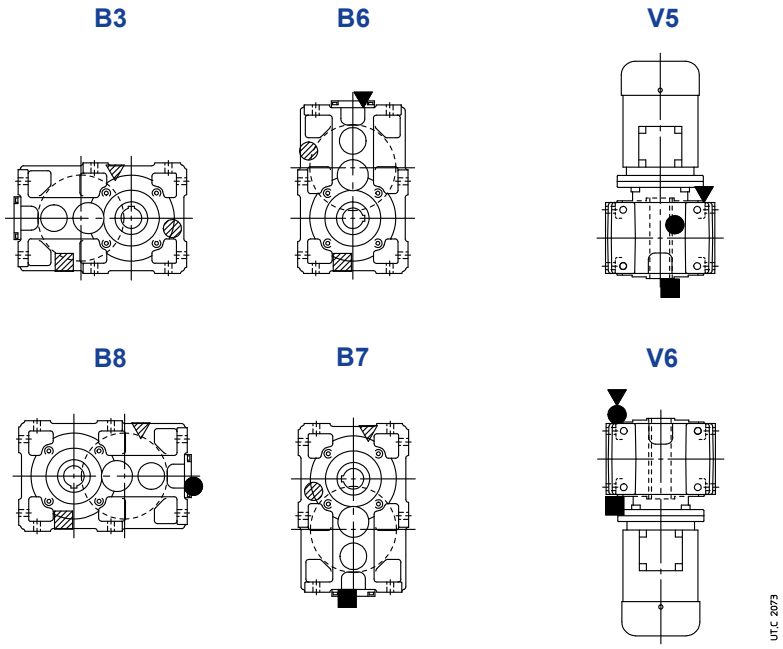

MR 3I 140 ... 360

Designs:
UP2A
UP2D

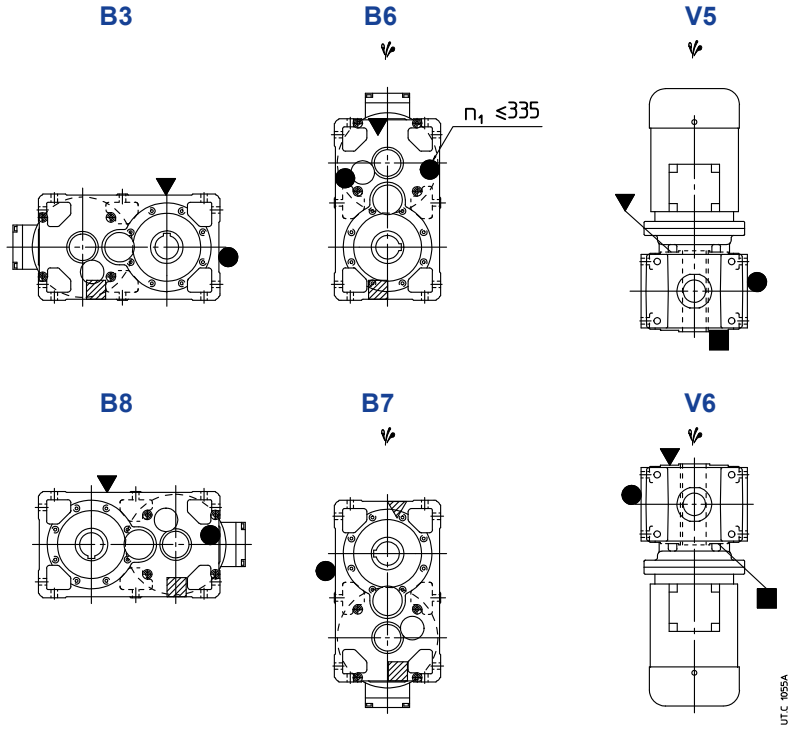

Possible high oil splash: for the corrective factor f_{t_3} of nominal thermal power P_{t_N} see ch. 4.

▼ oil filler plug
● oil level plug
■ oil drain plug
▼● oil filler plug with oil dip stick

▽ oil filler plug on opposite side (not in view)
◍ oil level plug on opposite side (not in view)
▨ oil drain plug on opposite side (not in view)

This page is intentionally left blank.

12.3 - Gearmotors MR 4I

Dimensions

MR 4I 63 ... 125

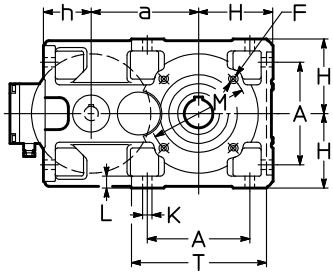

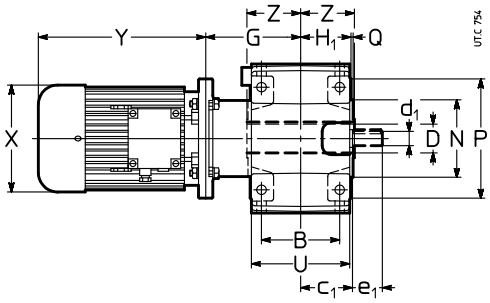

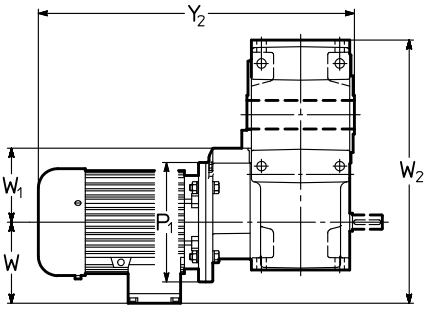

Red.	Mot. B5	a	A	B	c_1	D Ø H7	d_1 Ø	e_1	F 1)	G	H h11	H_1	h h11	K Ø	L	M Ø	N Ø h6	P Ø	Q	T	U	Z	P_1 Ø	X Ø ≈	Y ≈	Y ≈ 2)	Y_2 ≈	Y_2 ≈ 2)	W ≈	W_1	W_2 ≈	lb	lb 2)
63 **64**	**63** **71**	113 **(63)** 115 **(64)**	102	90	61	30 **(63)** 32 **(64)**	16	30	M8	109	80	58,5	62	11,5	14	100	80	120	3	143	114	63	140 160	123 138	189 216	244 278	361 388	416 450	95 112	80 80	290 307	53 60	57 66
80 **81**	**71** **80**	142,5	132	106	72	38 **(80)** 40 **(81)**	19	40	M10	135	100	69,5	70	14	17	130	110	160	3,5	180	135	75	160 200	138 156	216 233	278 302	426 443	488 512	112 121	100 100	355 364	79 90	86 99
100	**80** **90**	180	172	131	87	48	24	50	M12	163	125	84,5	80	16	20	165	130	200	3,5	228	165	90	200 200	156 176	233 287	302 366	486 540	555 619	121 141	125 125	426 446	141 154	150 168
125	**90** **100** **112**	225	212	162	107	60	28	60	3)	203	150	103,5	100	18	23	215	180	250	4	274	201	110	200 250 250	176 194 218	287 310 336	366 405 435	600 623 649	679 718 748	141 151 163	166 166 166	516 526 538	247 256 284	260 271 304

1) Working length of thread 2 · F.
2) Values valid for brake motor.
3) For dimension, number and angular position see ch. 6.

Designs[1] (direction of rotation)

MR 4I 63 ... 125

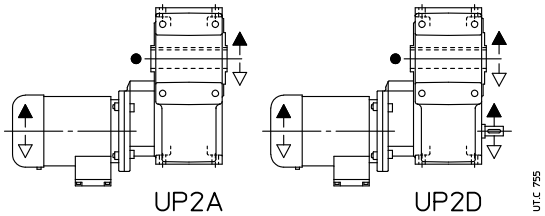

● Position of reference groove (see ch.18) for radial load verification.
1) For motor design see ch. 2.

Mounting positions

Unless otherwise stated, gear reducers are supplied in mounting position **B3** (see ch. 2).

MR 4I 63 ... 125

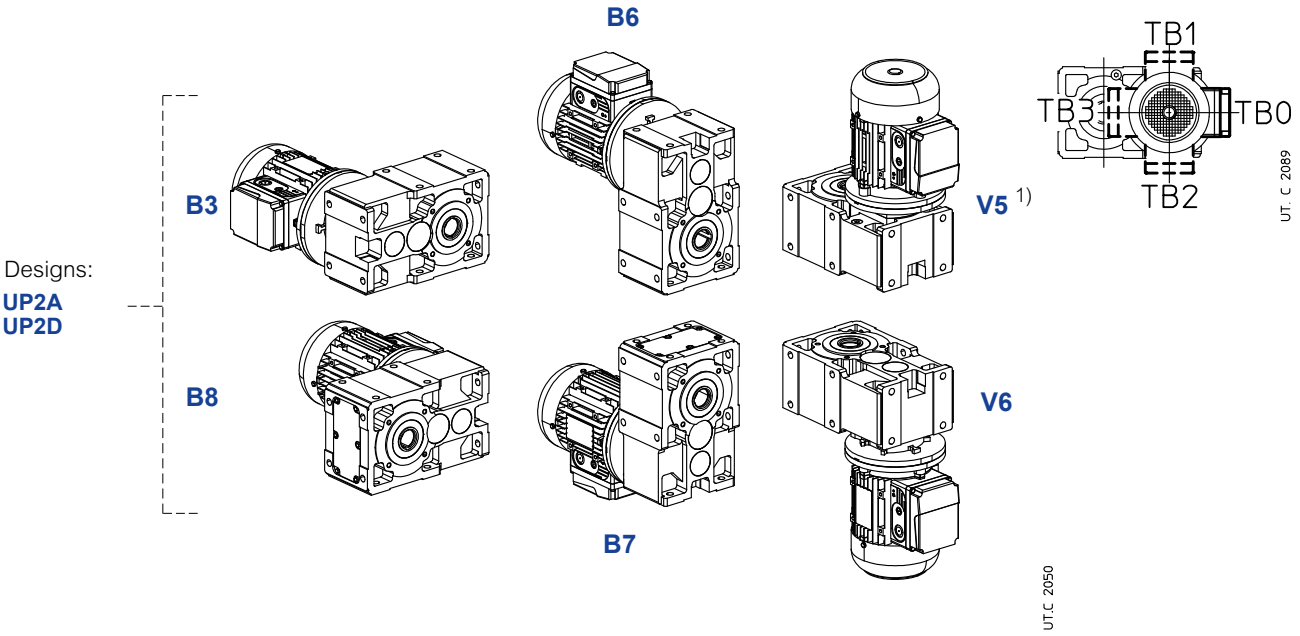

Oil quantity MR 4I 63 ... 125

Lubricant quantities [gal] stated in the table are approximate for provisioning. The exact oil quantity the gear reducer is to be filled with is defined by the level plug.

Mounting position	63, 64	80, 81	100	125
B3	0.29	0.5	0.95	1.7
B8	0.29	0.5	0.95	1.7
B6	0.48	0.85	1.6	2.8
B7	0.37	0.71	1.4	2.5
V5[1)]	0.34	0.66	1.3	2.3
V6	0.37	0.71	1.4	2.5

1) The first 2 reduction stages lubricated «for life» with grease (10% oil quantity).

Lubrication details

MR 4I 100, 125

Designs:

UP2A
UP2D

B3

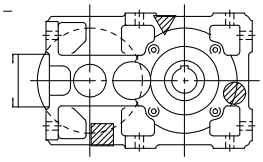

B6

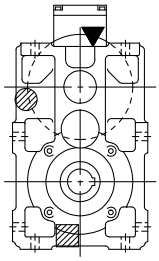

V5

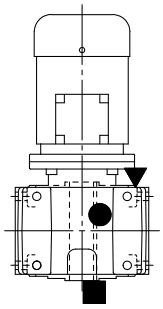

B8

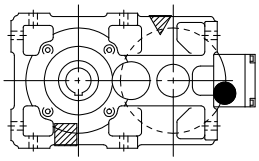

B7

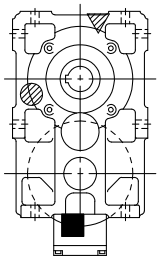

V6

1)

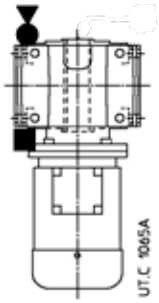

1) See also ch. 6 page 43.

▼ oil filler plug
● oil level plug
■ oil drain plug
▼● oil filler plug with oil level dip stick

▽ oil drain plug on opposite side (not in view)
◍ oil level plug on opposite side (not in view)
▨ oil drain plug on opposite side (not in view)

12.4 - Gearmotors MR 2I – Long model

Dimensions

MR 2I 80 ... 125 – Long model

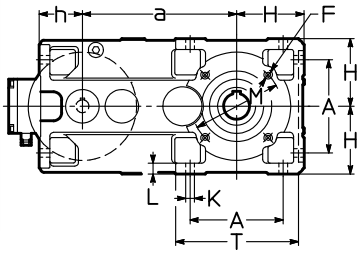

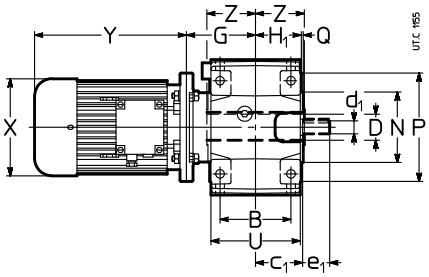

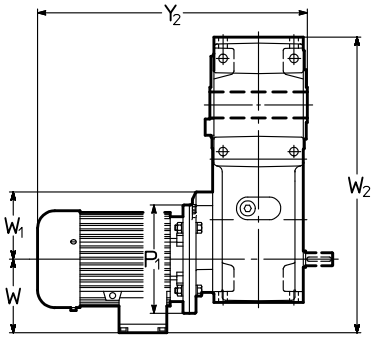

Red.	Mot.	a	A	B	c_1	D Ø H7	d_1 Ø	e_1	F	G	H h11	H_1	h h11	K Ø	L	M Ø	N Ø h6	P Ø	Q	T	U	Z	P_1 Ø	X Ø ≈	Y ≈		Y_2 ≈		W ≈	W_1	W_2 ≈	lb	
	B5								1)																	2)		2)					2)
80	**90**	225	132	106	72	38	19	40	M10	108	100	69,5	70	14	17	130	110	160	3,5	180	135	75	200	176	287	366	470	549	141	100	466	120	132
81	**100**[4]					**(80)**																	250	194	310	405	493	588	151	125	476	130	146
	112[4]					40 **(81)**																	250	218	336	435	519	618	163	125	488	163	180
100	**90**	284,7	172	131	87	48	24	50	M12	130	125	84,5	80,3	16	20	165	130	200	3,5	228	165	90	200	176	287	366	507	586	141	125	551	168	181
	100																						250	194	310	405	530	625	151	125	561	176	192
	112																						250	218	336	435	556	655	163	125	573	205	225
	132[4]									150													300	257	445	553	685	793	194	150	604	282	309
125	**112**	358	212	162	107	60	28	60	3)	159	150	103,5	100	18	23	215	180	250	4	274	201	110	250	218	336	435	605	704	163	166	671	295	315
	132									164													300	257	445	553	719	827	194	166	702	373	399
	160									179													350	315	539	640	828	929	241	175	749	474	485
	180																						350	354	613	734	902	1023	278	175	786	604	582

1) Working length of thread 2 · F.
2) Values valid for brake motor.
3) For dimension, number and angular position see ch. 6.
4) On request for 100LB 4, 112M 4 and 132M 4 also mounting position **B5R** (see ch. 1.2; dimensions Y and Y_2 increase by 27 mm, 26 mm and 35 mm, respectively).

MR 2I 140 ... 225 – Long model

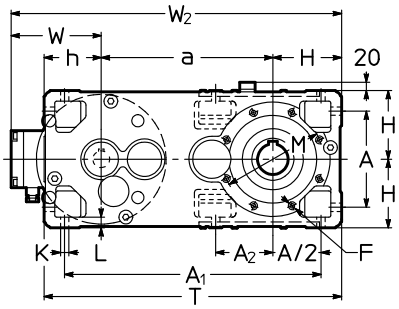

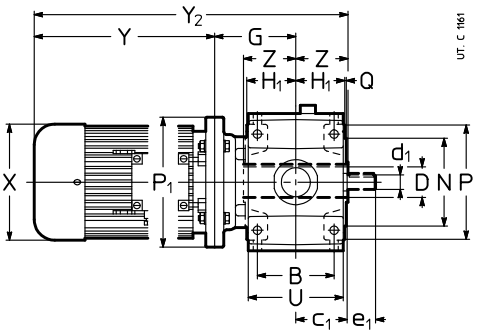

Red.	Mot.	a	A	A_1	A_2	B	c_1	D Ø H7	d_1 Ø	e_1	F 1)	G	H h11	H_1	h h11	K Ø	L	M Ø	N Ø h6	P Ø	T	Z	P_1 Ø	X Ø ≈	Y ≈	Y ≈ 2)	Y_2 ≈	Y_2 ≈ 2)	W ≈	W_2 ≈	lb	lb 2)
	B5																		**Q**		**U**											
140	**132**	373	212	560	127	162	107	70	28	60	4)	159	150	103,5	125	18	23	265	230	300	648	125	300	257	445	553	729	837	194	717	443	470
	160											179											350	315	539	640	843	944	241	764	545	556
	180																						350	354	613	734	917	1038	278	801	675	653
	200																						350	354	654	734	958	1038	278	801	732	705
160	**160**	450	252	672	–	201	132	80	38	80	M16	204	180	128,5	150	22	28	265	230	300	780	136	350	315	539	640	879	980	241	871	721	732
	180																		4		249		350	354	613	734	953	1074	278	908	851	829
	200											194											400	354	654	734	984	1064	278	908	908	882
	225											224											450	411	710	–	1070	–	298	928	1109	–
180	**180**	470	252	692	170	201	132	90	38	80	M16	204	180	128,5	150	22	28	300	250	350	800	150	350	354	613	734	967	1088	278	928	891	869
	200											194							5		249		400	354	654	734	998	1078	278	928	948	922
	225											224											450	411	710	–	1084	–	298	948	1149	–
	250																						450	411	735	–	1109	–	298	948	1199	–
200	**200**	556	320	831	–	250	162	100	48	110	4)	225	225	158,0	180	27	34	350	300	400	961	167	400	354	654	734	1046	1126	278	1059	1246	1219
	225											255							5		307		450	411	710	–	1132	–	298	1079	1446	–
	250																						550	411	735	–	1157	–	298	1079	1497	–
	280																						550	490	819	–	1241	–	360	1141	1907	–
225	**225**	581	320	856	223	250	162	110	48	110	M20	255	225	158,0	180	27	34	400	350	450	986	180	450	411	710	–	1145	–	298	1104	1517	–
	250																		5		307		550	411	735	–	1170	–	298	1104	1567	–
	280																						550	490	819	–	1254	–	360	1166	1978	–
	315[3]																						550	490	820	–	1255	–	360	1166	1892	–

1) Working length of thread 2 · F.
2) Values valid for brake motor.
3) Mounting position **B5R** (see ch. 1.2), brake motor is not possible. Moreover for size **315S** the following dimensions will be reduced: dimension **X**: Ø 490, dimension **Y**: 820, dimension **W**: 360, mass: 1102 kg.
4) For dimension, number and angular position see ch. 6.

Designs[1] (direction of rotation)

MR 2I 80 ... 125 – Long model

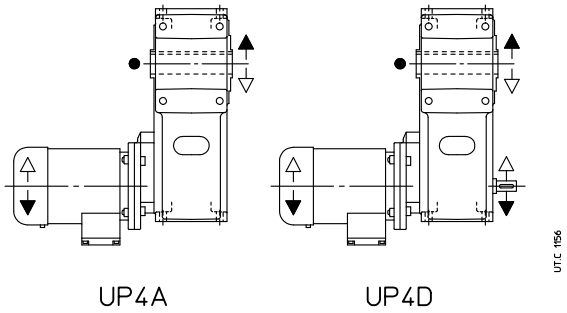

MR 2I 140 ... 225 – Long model

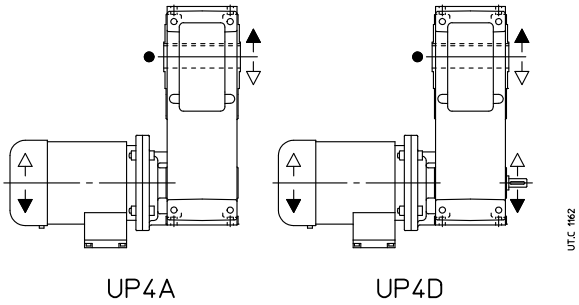

● Position of reference groove (see ch. 6) for radial load verification.
1) For motor design see ch. 2.

Mounting positions

Unless otherwise stated, gear reducers are supplied in mounting position **B3** (see ch. 2).

MR 2I 80 ... 125 – Long model

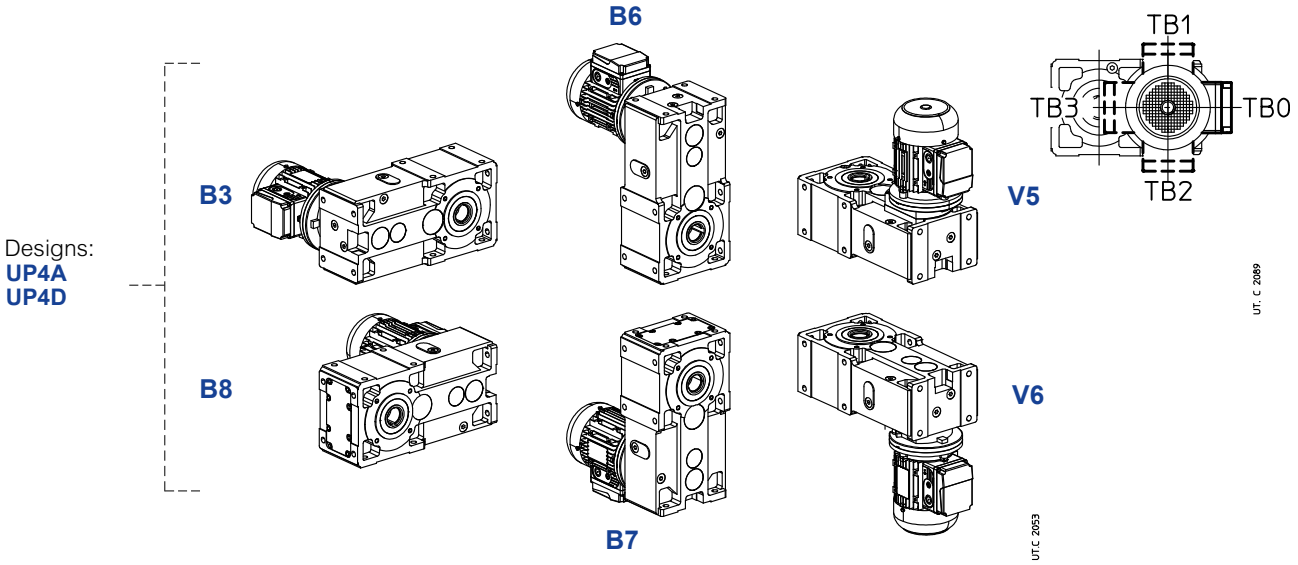

MR 2I 140 ...225 – Long model

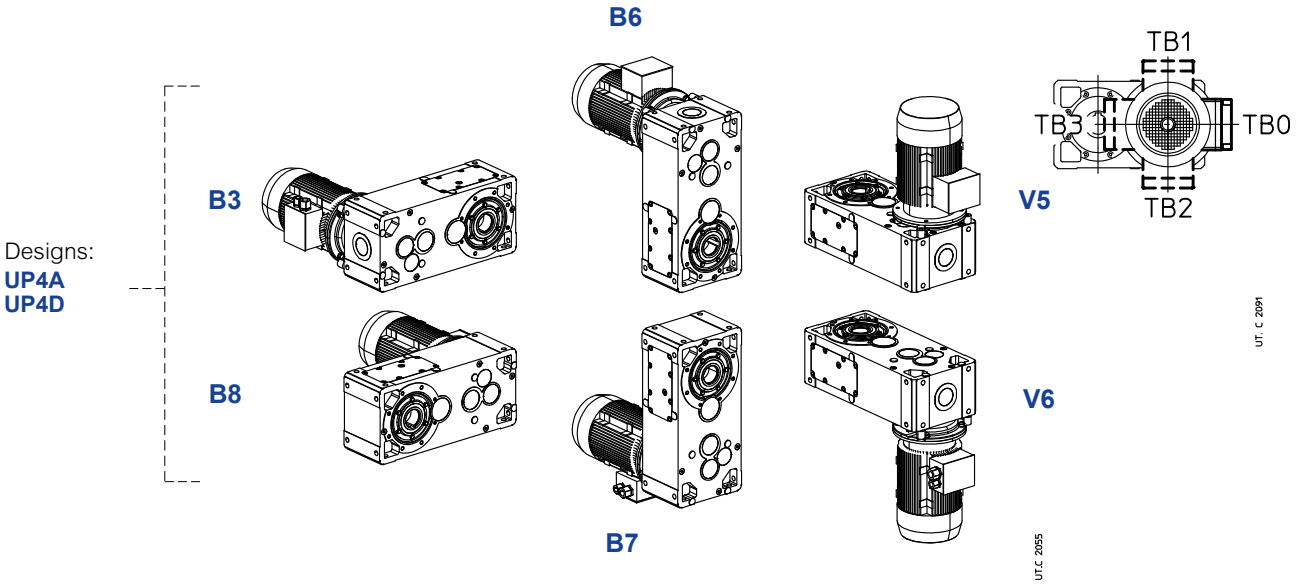

Oil quantity MR 2I 80 ... 225 – Long model

Lubricant quantities [gal] stated in the table are approximate for provisioning. The exact oil quantity the gear reducer is to be filled with is defined by the level plug.

Mounting position	80, 81	100	125	140	160	180	200	225
B3	0.53	0.53	2.1	2.3	4.2	4.6	8.7	9
B8	0.53	0.53	2.1	3.2	5.3	5.5	10	11
B7	0.82	0.82	3.7	4.1	7.4	7.8	15	15
B6	0.82	0.82	3.7	4.1	7.4	7.8	15	15
V5	0.82	0.82	3.2	3.6	6.3	6.7	13	13
V6	0.82	0.82	3.2	3.6	6.3	6.7	13	13

Lubrication details

MR 2I 100 ... 125 – Long model

Designs:
UP4A
UP4D

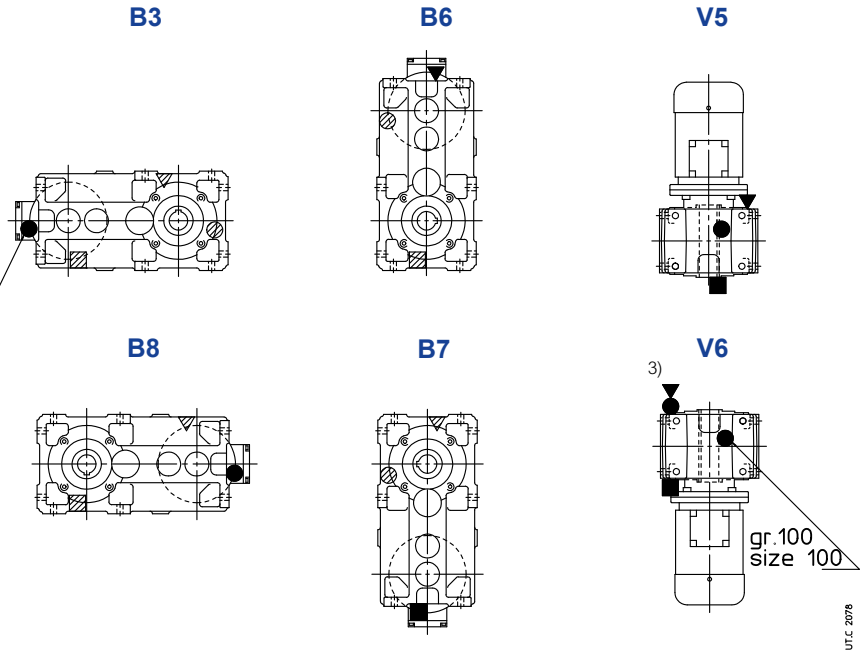

MR 2I 140 ... 225 – Long model

Designs:
UP4A
UP4D

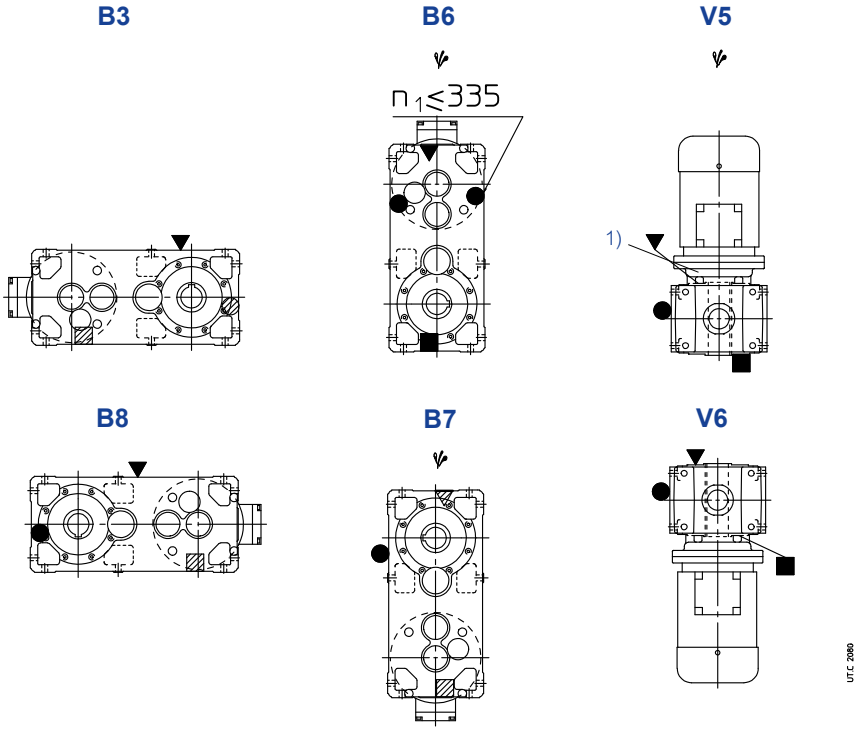

1) Oil filler plug possible also on low speed shaft side.
2) Oil filler plug possible also on opposite side.
3) See also ch. 6 page. 43.

Possible high oil splash: for the corrective factor f_{t_3} of nominal thermal power P_{t_N} see ch. 4.

▼ oil filler plug
● oil level plug
■ oil drain plug
▼● oil filler plug with oil level dip stick

▽ oil filler plug on opposite side (not in view)
◍ oil level plug on opposite side (not in view)
▨ oil drain plug on opposite side (not in view)

This page is intentionally left blank.

12.5 - Gearmotors MR 3I – Long model

Dimensions

MR 3I 80 ... 125 – Long model

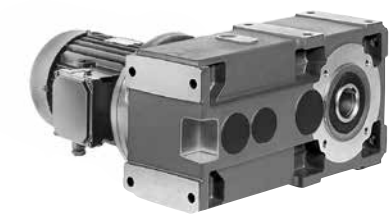

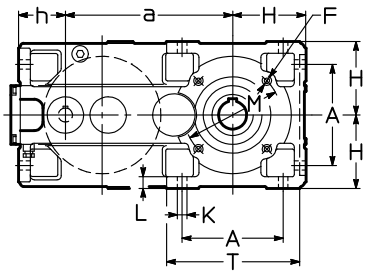

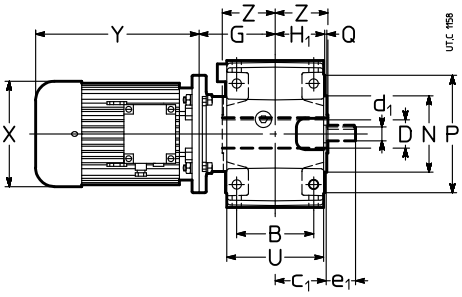

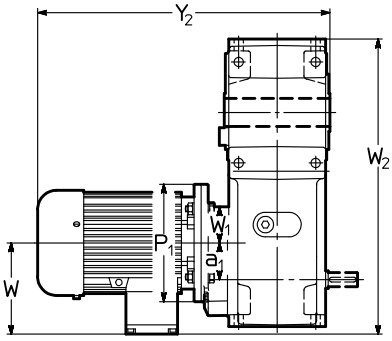

Red.	Mot.	a	A	B	c_1	D Ø H7	d_1 Ø	e_1	F	G	H h11	H_1	h h11	K Ø	L	M Ø	N Ø h6	P Ø	Q	T	U	Z	P_1 Ø	X Ø ≈	Y ≈		Y_2 ≈		W ≈	W_1	W_2 ≈	lb	
	B5	a_1							1)																	2)		2)					2)
80	**71**	225	132	106	72	38	19	40	M10	108	100	69.5	70	14	17	130	110	160	3.5	180	135	75	160	138	216	278	399	461	112	50	395	90	97
81	**80**	50				**(80)**																	200	156	233	302	416	485	121	50	396	104	113
	90																						200	176	287	366	470	549	141	50	416	120	132
	100					40 **(81)**																	200	194	337	432	520	615	151	50	426	135	150
100	**80**	284.7	172	131	87	48	24	50	M12	130	125	84.5	80.3	16	20	165	130	200	3.5	228	165	90	200	156	233	302	453	522	121	62	490	157	165
	90	63																					200	176	287	366	507	586	141	62	490	170	183
	100																						250	194	310	405	530	625	151	62	498	179	194
	112																						250	218	336	435	556	655	163	62	510	207	227
125	**90**	358	212	162	107	60	28	60	3)	159	150	103.5	100	18	23	215	180	250	4.0	274	201	110	200	176	287	366	556	635	141	86	608	276	289
	100	80																					250	194	310	405	579	674	151	86	608	284	300
	112																						250	218	336	435	605	704	163	86	608	313	333
	132									164													300	257	445	553	719	827	194	86	622	390	417

1) Working length of thread 2 · F.
2) Values valid for brake motor.
3) For dimension, number and angular position see ch. 6.

MR 3I 140 ... 225 – Long model

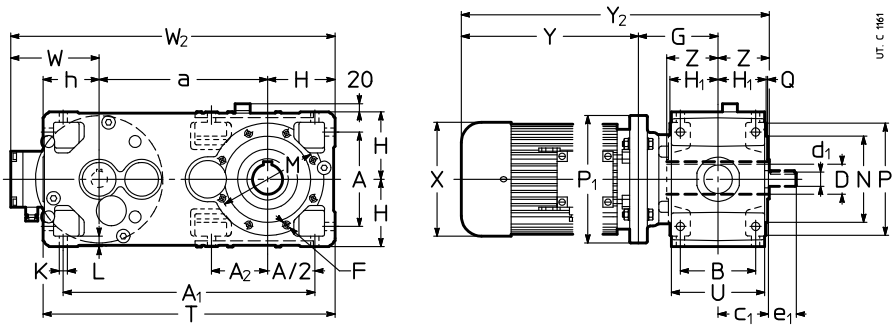

Red.	Mot. B5	a	A	A_1	A_2	B	c_1	D Ø H7	d_1 Ø	e_1	F 1)	G	H h11	H_1	h h11	K Ø	L	M Ø	N Ø h6 Q	P Ø	T U	Z	P_1 Ø	X Ø ≈	Y ≈	Y ≈ 2)	Y_2 ≈	Y_2 ≈ 2)	W ≈	W_2 ≈	lb	lb 2)
140	**100**	373	212	560	127	162	107	70	24	50	4)	134	150	103,5	125	18	23	265	230	300	648	125	250	194	310	405	569	664	151	674	337	353
	112																		4		201		250	218	336	435	595	694	163	686	355	379
	132											159											300	257	445	553	729	837	194	717	443	470
	1603)																						300	315	539	640	843	944	241	764	545	556
160	**100**	450	252	672	–	201	132	80	28	60	M16	179	180	128,5	150	22	28	265	230	300	780	136	250	194	310	405	625	720	151	781	514	529
	112																		4		249		250	218	336	435	651	750	163	793	531	556
	132																						300	257	445	553	760	868	194	824	619	646
	160											204											350	315	539	640	879	980	241	871	721	732
	180																						350	354	613	734	953	1074	278	908	851	829
180	**112**	470	252	692	170	201	132	90	28	60	M16	179	180	128,5	150	22	28	300	250	350	800	150	250	218	336	435	665	764	163	813	571	595
	132																		5		249		300	257	445	553	774	882	194	844	659	682
	160											204											350	315	539	640	893	994	241	891	761	772
	180																						350	354	613	734	967	1088	278	928	891	869
	2003)																						350	354	654	734	998	1078	278	928	948	922
200	**132**	556	320	831	–	250	162	100	38	80	4)	225	225	158,0	180	27	34	350	300	400	961	167	300	257	445	553	837	945	194	975	957	983
	160																		5		307		350	315	539	640	931	1032	241	1022	1058	1069
	180																						350	354	613	734	1005	1126	278	1059	1188	1166
	200																						400	354	654	734	1046	1126	278	1059	1246	1219
	225											255											450	411	710	–	1132	–	298	1079	1446	–
225	**132**	581	320	856	223	250	162	110	38	80	M20	225	225	158,0	180	27	34	400	350	450	986	180	300	257	445	553	850	958	194	1000	1027	1054
	160																		5		307		350	315	539	640	944	1045	241	1047	1129	1140
	180																						350	354	613	734	1018	1139	278	1084	1259	1237
	200																						400	354	654	734	1059	1139	278	1084	1316	1290
	225											255											450	411	710	–	1145	–	298	1104	1517	–
	2503)																						450	411	710	–	1145	–	298	1104	1567	–

1) Working length of thread 2 · F.
2) Values valid for brake motor.
3) Mounting position **B5R** (see ch. 1.2).
4) For dimension, number and angular position see ch. 6.

Designs[1] (direction of rotation)

MR 3I 80 ... 125 – Long model

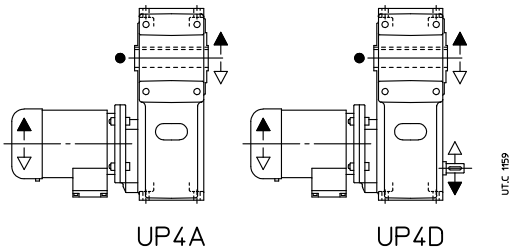

MR 3I 140 ... 225 – Long model

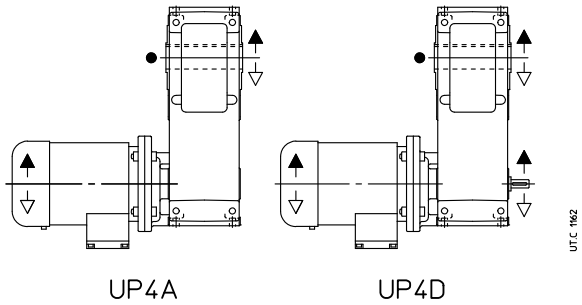

● Position of reference groove (see ch. 6) for radial load verification.
1) For motor design see ch. 2.

Mounting positions

Unless otherwise stated, gear reducers are supplied in mounting position **B3** (see ch. 2).

MR 3I 80 ... 125 – Long model

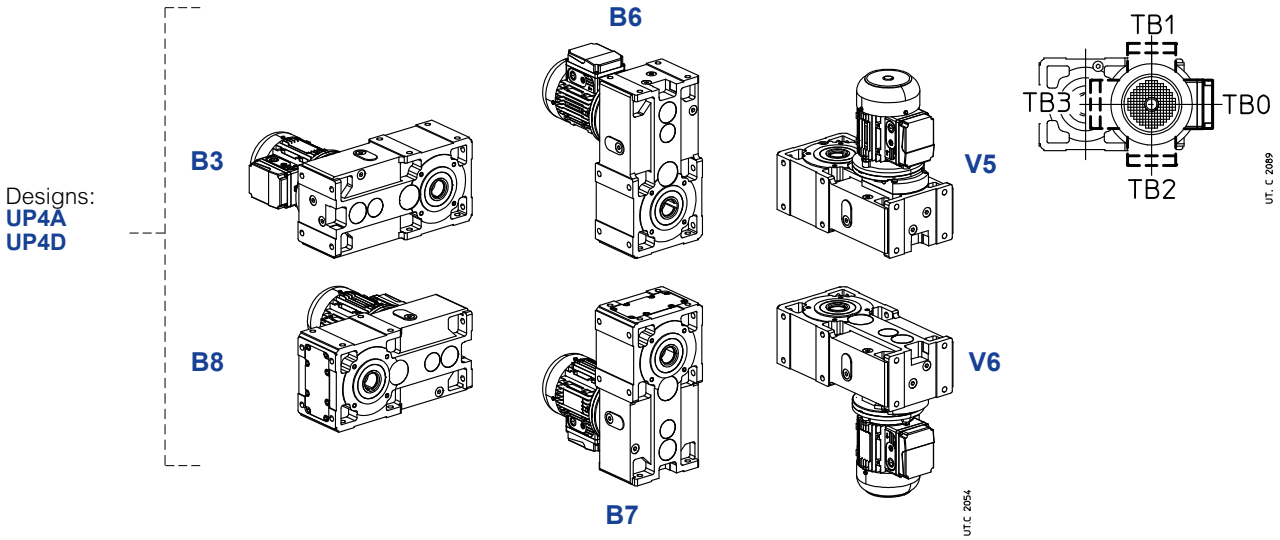

MR 3I 140 ... 225 – Long model

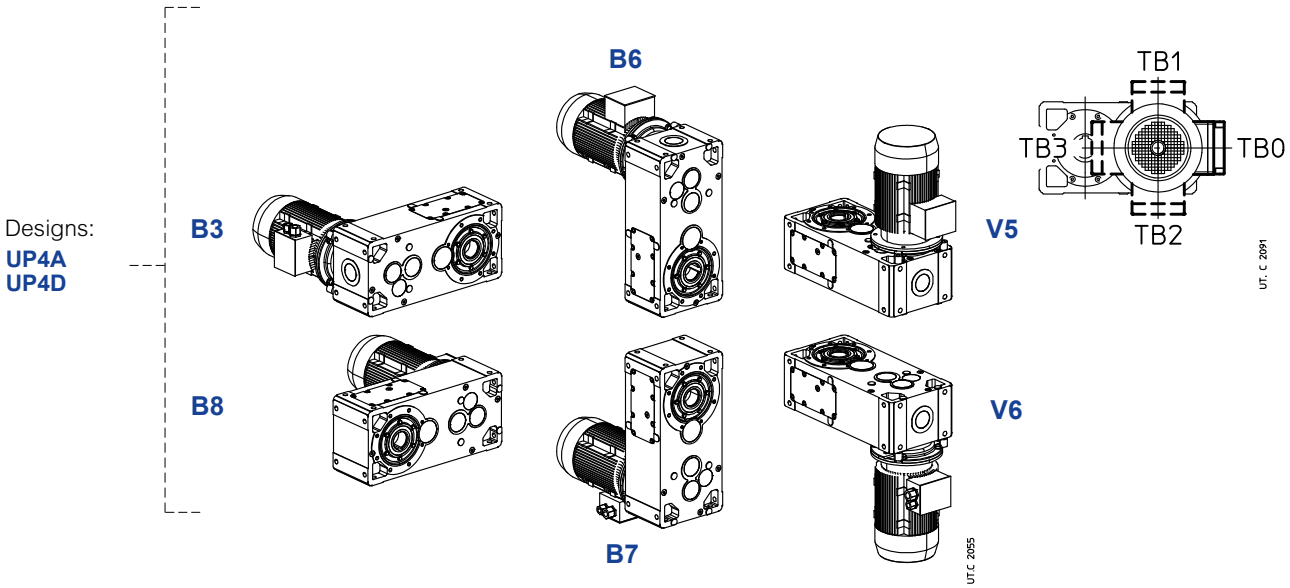

Oil quantity MR 3I 80 ... 225 – Long model

Lubricant quantities [gal] stated in the table are approximate for provisioning. The exact oil quantity the gear reducer is to be filled with is defined by the level plug.

Mounting position	80, 81	100	125	140	160	180	200	225
B3	0.61	1.1	2.2	2.3	4.2	4.6	8.7	9
B8	0.61	1.1	2.2	3.3	5.8	6.2	12	12
B6	1	2.2	4.2	4.1	7.4	7.8	15	15
B7	1	2.2	4.2	4.1	7.4	7.8	15	15
V5	0.87	1.7	3.2	3.6	6.3	6.7	13	13
V6	0.87	1.7	3.2	3.6	6.3	6.7	13	13

Lubrication details

MR 3I 100 ... 125 – Long model

Designs:
UP4A
UP4D

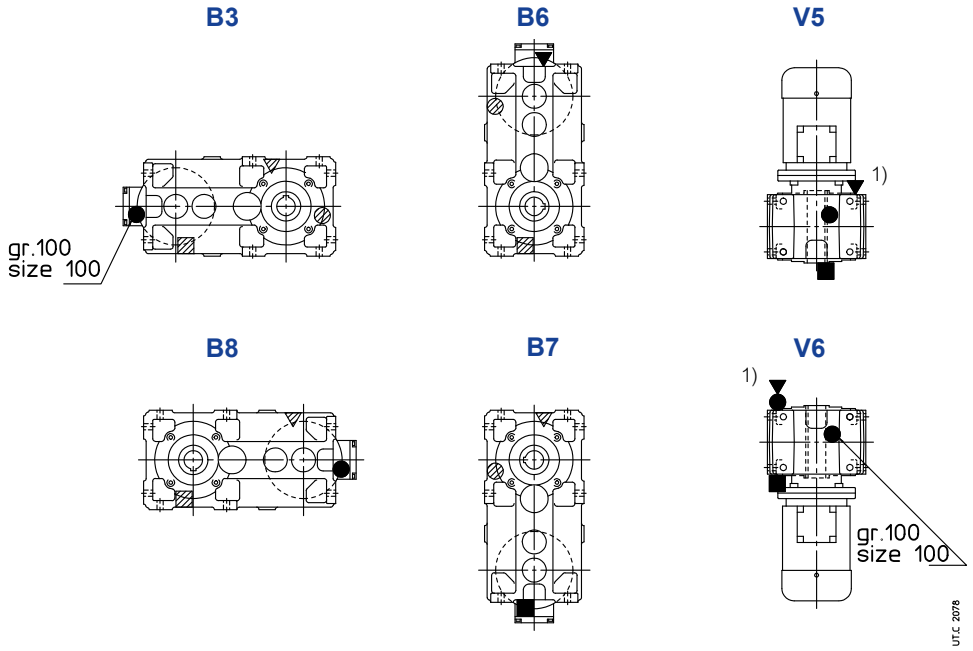

MR 3I 140 ... 225 – Long model

Designs:
UP4A
UP4D

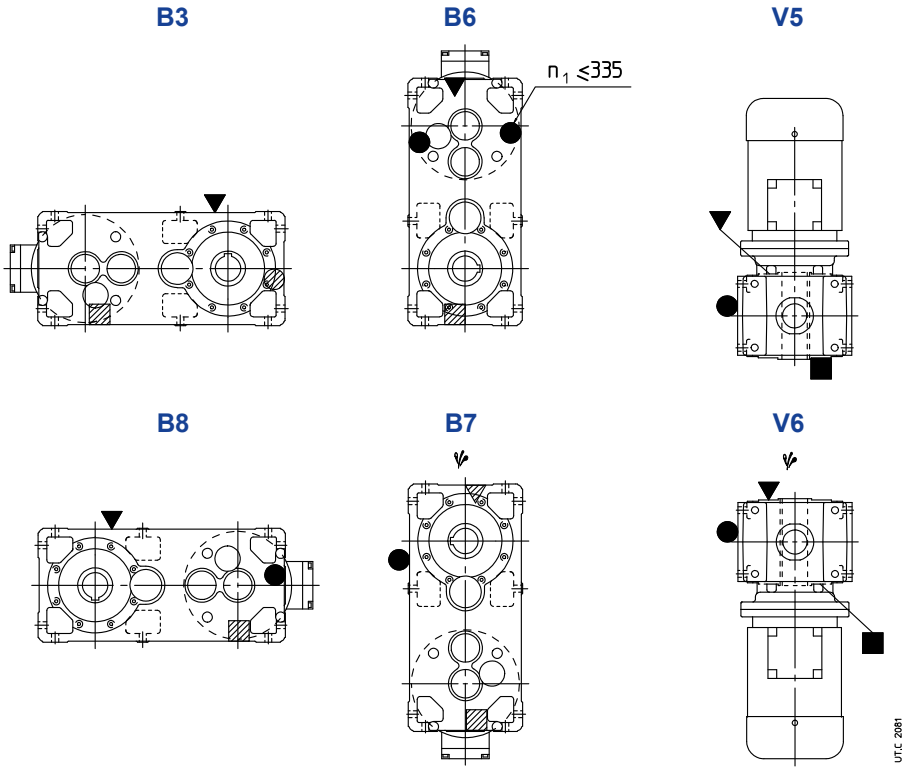

Possible high oil splash: for the corrective factor f_{t_3} of nominal thermal power P_{t_N} see ch. 4.
1) See also ch. 6 page 43.

▼ oil filler plug
● oil level plug
■ oil drain plug
▼● oil filler plug with oil level dip stick

▽ oil filler plug on opposite side (not in view)
◍ oil level plug on opposite side (not in view)
▨ oil drain plug on opposite side (not in view)

13 – Bevel helical gearmotor selection tables

13 - Bevel helical gearmotor selection tables

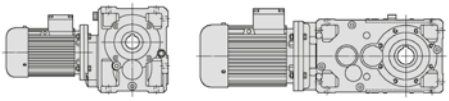

Motor power P_1 hp 1)	Output speed n_2 rpm	Output torque T_2 lb in	Service factor fs	2)	Gear ratio i
0,12	5,46	1 270	1,25	MR C3I 50 - 11 × 140 63 A	6 210
	6,71	1 040	1,5	MR C3I 50 - 11 × 140 63 A	6 171
	8,51	815	2,24	MR C3I 50 - 11 × 140 63 A	6 135
	13,6	520	2,65	MR ICI 50 - 11 × 140 63 A	6 84,3
	15,2	470	1,32	MR ICI 40 - 11 × 140 63 A	6 75,8
	17	415	3,35	MR ICI 50 - 11 × 140 63 A	6 67,5
	18,4	385	1,6	MR ICI 40 - 11 × 140 63 A	6 62,5
	20,9	340	4,25	MR ICI 50 - 11 × 140 63 A	6 54,9
	24	295	2,5	MR ICI 40 - 11 × 140 63 A	6 47,8
	29,2	245	3,35	MR ICI 40 - 11 × 140 63 A	6 39,4
	37,7	190	3,35	MR ICI 40 - 11 × 140 63 A	6 30,5
	43,9	165	3,55	MR CI 40 - 11 × 140 63 A	6 26,2
	53,1	135	4,5	MR CI 40 - 11 × 140 63 A	6 21,7
	64,4	115	5	MR CI 40 - 11 × 140 63 A	6 17,9
	84,1	86	8,5	MR CI 40 - 11 × 140 63 A	6 13,7
	102	71	11,2	MR CI 40 - 11 × 140 63 A	6 11,3
0,16	6,71	1 380	1,12	MR C3I 50 - 11 × 140 63 B	6 171
	8,32	1 120	1,4	MR C3I 50 - 11 × 140 63 A	4 210
	8,51	1 090	1,7	MR C3I 50 - 11 × 140 63 B	6 135
	10,2	910	1,7	MR C3I 50 - 11 × 140 63 A	4 171
	13	715	2,5	MR C3I 50 - 11 × 140 63 A	4 135
	13,6	695	2	MR ICI 50 - 11 × 140 63 B	6 84,3
	15,2	625	1	MR ICI 40 - 11 × 140 63 B	6 75,8
	17	555	2,5	MR ICI 50 - 11 × 140 63 B	6 67,5
	18,4	515	1,18	MR ICI 40 - 11 × 140 63 B	6 62,5
	20,8	455	3	MR ICI 50 - 11 × 140 63 A	4 84,3
	23,1	410	1,5	MR ICI 40 - 11 × 140 63 A	4 75,8
	24	395	1,9	MR ICI 40 - 11 × 140 63 B	6 47,8
	25,9	365	3,75	MR ICI 50 - 11 × 140 63 A	4 67,5
	28	340	1,8	MR ICI 40 - 11 × 140 63 A	4 62,5
	29,2	325	2,5	MR ICI 40 - 11 × 140 63 B	6 39,4
	31,9	295	5	MR ICI 50 - 11 × 140 63 A	4 54,9
	36,6	260	2,8	MR ICI 40 - 11 × 140 63 A	4 47,8
	43,9	220	2,8	MR CI 40 - 11 × 140 63 B	6 26,2
	44,4	215	3,75	MR ICI 40 - 11 × 140 63 A	4 39,4
	53,1	180	3,35	MR CI 40 - 11 × 140 63 B	6 21,7
	57,3	165	3,75	MR ICI 40 - 11 × 140 63 A	4 30,5
	66,9	145	4	MR CI 40 - 11 × 140 63 A	4 26,2
	80,8	120	5	MR CI 40 - 11 × 140 63 A	4 21,7
	98	99	5,6	MR CI 40 - 11 × 140 63 A	4 17,9
	128	76	9,5	MR CI 40 - 11 × 140 63 A	4 13,7
	155	62	12,5	MR CI 40 - 11 × 140 63 A	4 11,3
	201	48,2	12,5	MR CI 40 - 11 × 140 63 A	4 8,72
0,25	2,93	4 950	1,12	MR C3I 81 - 14 × 160 71 A	6 393
	3,5	4 150	1,18	MR C3I 80 - 14 × 160 71 A	6 329
	3,5	4 150	1,32	MR C3I 81 - 14 × 160 71 A	6 329
	4,37	3 320	1,7	MR C3I 80 - 14 × 160 71 A	6 263
	4,37	3 320	1,9	MR C3I 81 - 14 × 160 71 A	6 263
	5,68	2 550	1,4	MR C3I 64 - 14 × 160 71 A	6 202
	5,46	2 650	2,36	MR C3I 80 - 14 × 160 71 A	6 211
	5,46	2 650	2,8	MR C3I 81 - 14 × 160 71 A	6 211
	7,1	2 040	1,4	MR C3I 63 - 14 × 160 71 A	6 162
	7,1	2 040	1,6	MR C3I 64 - 14 × 160 71 A	6 162
	6,82	2 130	2,8	MR C3I 80 - 14 × 160 71 A	6 169
	9	1 610	2,12	MR C3I 63 - 14 × 160 71 A	6 128
	9	1 610	2,65	MR C3I 64 - 14 × 160 71 A	6 128
	9,68	1 530	1,4	MR ICI 63 - 14 × 160 71 A	6 119
	9,68	1 530	1,7	MR ICI 64 - 14 × 160 71 A	6 119
	9,31	1 590	3	MR ICI 80 - 14 × 160 71 A	6 124

Motor power P_1 hp 1)	Output speed n_2 rpm	Output torque T_2 lb in	Service factor fs	2)	Gear ratio i
0,25	10,2	1 420	1,06	MR C3I 50 - 11 × 140 63 B	4 171
	11,7	1 230	1,5	MR C3I 50 - 14 × 160 71 A	6 97,9
	12,1	1 220	2	MR ICI 63 - 14 × 160 71 A	6 95
	12,1	1 220	2,36	MR ICI 64 - 14 × 160 71 A	6 95
	11,6	1 270	4	MR ICI 80 - 14 × 160 71 A	6 98,8
	13	1 120	1,6	MR C3I 50 - 11 × 140 63 B	4 135
	14,5	1 020	2,36	MR ICI 63 - 14 × 160 71 A	6 79,5
	18,8	785	1,8	MR ICI 50 - 14 × 160 71 A	6 61,1
	18,1	820	3	MR ICI 63 - 14 × 160 71 A	6 63,6
	20,8	715	1,9	MR ICI 50 - 11 × 140 63 B	4 84,3
	22,6	655	4	MR ICI 63 - 14 × 160 71 A	6 50,9
	23,1	640	0,95	MR ICI 40 - 11 × 140 63 B	4 75,8
	25,4	585	1	MR ICI 40 - 14 × 160 71 A	6 45,3
	25,9	570	2,36	MR ICI 50 - 11 × 140 63 B	4 67,5
	28	530	1,12	MR ICI 40 - 11 × 140 63 B	4 62,5
	33,2	445	1,7	MR ICI 40 - 14 × 160 71 A	6 34,7
	31,9	465	3,15	MR ICI 50 - 11 × 140 63 B	4 54,9
	36,8	410	5	MR CI 63 - 14 × 160 71 A	6 31,3
	36,6	405	1,8	MR ICI 40 - 11 × 140 63 B	4 47,8
	40,3	370	2,24	MR ICI 40 - 14 × 160 71 A	6 28,6
	43,9	345	1,7	MR CI 40 - 14 × 160 71 A	6 26,2
	40,4	365	4,25	MR ICI 50 - 11 × 140 63 B	4 43,3
	47,7	315	3,75	MR CI 50 - 14 × 160 71 A	6 24,1
	44,4	335	2,36	MR ICI 40 - 11 × 140 63 B	4 39,4
	52	285	2,24	MR ICI 40 - 14 × 160 71 A	6 22,1
	53,1	285	2,12	MR CI 40 - 14 × 160 71 A	6 21,7
	57,3	260	2,36	MR ICI 40 - 11 × 140 63 B	4 30,5
	66,9	225	2,65	MR CI 40 - 11 × 140 63 B	4 26,2
	80,8	185	3,15	MR CI 40 - 11 × 140 63 B	4 21,7
	98	155	3,75	MR CI 40 - 11 × 140 63 B	4 17,9
	128	120	6	MR CI 40 - 11 × 140 63 B	4 13,7
	155	97	8	MR CI 40 - 11 × 140 63 B	4 11,3
	201	75	8	MR CI 40 - 11 × 140 63 B	4 8,72
0,33	4,45	4 300	1,12	MR C3I 80 - 14 × 160 71 A	4 393
	4,45	4 300	1,32	MR C3I 81 - 14 × 160 71 A	4 393
	5,32	3 600	1,4	MR C3I 80 - 14 × 160 71 A	4 329
	5,32	3 600	1,5	MR C3I 81 - 14 × 160 71 A	4 329
	6,91	2 770	1,12	MR C3I 64 - 14 × 160 71 A	4 253
	6,65	2 880	1,9	MR C3I 80 - 14 × 160 71 A	4 263
	6,65	2 880	2,24	MR C3I 81 - 14 × 160 71 A	4 263
	8,64	2 210	1,32	MR C3I 63 - 14 × 160 71 A	4 202
	8,64	2 210	1,6	MR C3I 64 - 14 × 160 71 A	4 202
	9	2 130	1,6	MR C3I 63 - 14 × 160 71 B	6 128
	9	2 130	2	MR C3I 64 - 14 × 160 71 B	6 128
	9,68	2 020	1,32	MR ICI 64 - 14 × 160 71 B	6 119
	8,31	2 300	2,8	MR C3I 80 - 14 × 160 71 A	4 211
	8,31	2 300	3,15	MR C3I 81 - 14 × 160 71 A	4 211
	9,31	2 100	2,24	MR ICI 80 - 14 × 160 71 B	6 124
	9,31	2 100	2,65	MR ICI 81 - 14 × 160 71 B	6 124
	10,8	1 770	1,6	MR C3I 63 - 14 × 160 71 A	4 162
	10,8	1 770	1,8	MR C3I 64 - 14 × 160 71 A	4 162
	12,1	1 620	1,5	MR ICI 63 - 14 × 160 71 B	6 95
	12,1	1 620	1,8	MR ICI 64 - 14 × 160 71 B	6 95
	10,4	1 840	3,15	MR C3I 80 - 14 × 160 71 A	4 169
	11,6	1 680	3	MR ICI 80 - 14 × 160 71 B	6 98,8
	11,6	1 680	3,55	MR ICI 81 - 14 × 160 71 B	6 98,8
	14,1	1 360	1,12	MR C3I 50 - 14 × 160 71 A	4 124
	13,7	1 400	2,5	MR C3I 63 - 14 × 160 71 A	4 128
	13,7	1 400	3	MR C3I 64 - 14 × 160 71 A	4 128
	14,7	1 330	1,6	MR ICI 63 - 14 × 160 71 A	4 119
	14,7	1 330	2	MR ICI 64 - 14 × 160 71 A	4 119
	14,5	1 350	1,8	MR ICI 63 - 14 × 160 71 B	6 79,5
	14,5	1 350	2,24	MR ICI 64 - 14 × 160 71 B	6 79,5
	14,2	1 380	3,35	MR ICI 80 - 14 × 160 71 A	4 124
	14,2	1 380	3,75	MR ICI 81 - 14 × 160 71 A	4 124

1) Powers valid for continuous duty S1; **increase possible** for duty cycles S2 ... S10 (see ch. 1 «General specifications»): in which case T_2 increases and fs decreases.
2) For complete designation when ordering see ch. 2.

13 - Bevel helical gearmotor selection tables

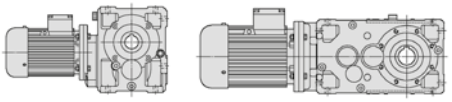

Motor power P_1 hp 1)	Output speed n_2 rpm	Output torque T_2 lb in	Service factor fs	2)				Gear ratio i
0,33	17,9	1 070	1,7	MR C3I 50 - 14 × 160	71 A		4	97,9
	18,8	1 040	1,32	MR ICI 50 - 14 × 160	71 B		6	61,1
	18,4	1 060	2,24	MR ICI 63 - 14 × 160	71 A		4	95
	18,4	1 060	2,8	MR ICI 64 - 14 × 160	71 A		4	95
	17,7	1 100	4,75	MR ICI 80 - 14 × 160	71 A		4	98,8
	21,5	890	1,9	MR C3I 50 - 14 × 160	71 A		4	81,5
	20,8	940	1,5	MR ICI 50 - 11 × 140	63 C		4	84,3
	22	890	2,65	MR ICI 63 - 14 × 160	71 A		4	79,5
	25,9	755	1,8	MR ICI 50 - 11 × 140	63 C		4	67,5
	28,6	680	2	MR ICI 50 - 14 × 160	71 A		4	61,1
	27,5	710	3,35	MR ICI 63 - 14 × 160	71 A		4	63,6
	31,9	615	1	MR ICI 40 - 14 × 160	71 A		4	54,9
	31,9	615	2,36	MR ICI 50 - 11 × 140	63 C		4	54,9
	35,8	545	2,5	MR ICI 50 - 14 × 160	71 A		4	48,9
	34,4	570	4,5	MR ICI 63 - 14 × 160	71 A		4	50,9
	36,8	545	3,75	MR CI 63 - 14 × 160	71 B		6	31,3
	36,6	535	1,4	MR ICI 40 - 11 × 140	63 C		4	47,8
	38,6	505	1,18	MR ICI 40 - 14 × 160	71 A		4	45,3
	40,3	485	1,7	MR ICI 40 - 14 × 160	71 B		6	28,6
	43,9	455	1,32	MR CI 40 - 14 × 160	71 B		6	26,2
	44	445	3,35	MR ICI 50 - 14 × 160	71 A		4	39,8
	47,7	420	3	MR CI 50 - 14 × 160	71 B		6	24,1
	44,4	440	1,8	MR ICI 40 - 11 × 140	63 C		4	39,4
	50,5	385	1,9	MR ICI 40 - 14 × 160	71 A		4	34,7
	53,1	375	1,6	MR CI 40 - 14 × 160	71 B		6	21,7
	55,8	350	4,5	MR ICI 50 - 14 × 160	71 A		4	31,4
	59,7	335	4	MR CI 50 - 14 × 160	71 B		6	19,3
	57,3	340	1,8	MR ICI 40 - 11 × 140	63 C		4	30,5
	61,3	320	2,5	MR ICI 40 - 14 × 160	71 A		4	28,6
	66,9	300	2	MR CI 40 - 11 × 140	63 C		4	26,2
	66,9	300	2	MR CI 40 - 14 × 160	71 A		4	26,2
	72,6	275	4,5	MR CI 50 - 11 × 140	63 C		4	24,1
	72,6	275	4,5	MR CI 50 - 14 × 160	71 A		4	24,1
	79,1	245	2,5	MR ICI 40 - 14 × 160	71 A		4	22,1
	80,8	245	2,36	MR CI 40 - 11 × 140	63 C		4	21,7
	80,8	245	2,36	MR CI 40 - 14 × 160	71 A		4	21,7
	90,8	220	6	MR CI 50 - 11 × 140	63 C		4	19,3
	90,8	220	6	MR CI 50 - 14 × 160	71 A		4	19,3
	98	205	2,8	MR CI 40 - 11 × 140	63 C		4	17,9
	98	205	2,8	MR CI 40 - 14 × 160	71 A		4	17,9
	112	180	7,1	MR CI 50 - 11 × 140	63 C		4	15,7
	112	180	7,1	MR CI 50 - 14 × 160	71 A		4	15,7
	128	155	4,5	MR CI 40 - 11 × 140	63 C		4	13,7
	128	155	4,5	MR CI 40 - 14 × 160	71 A		4	13,7
	155	130	6	MR CI 40 - 11 × 140	63 C		4	11,3
	155	130	6	MR CI 40 - 14 × 160	71 A		4	11,3
	170	120	10	MR CI 50 - 14 × 160	71 A		4	10,3
	201	99	6	MR CI 40 - 11 × 140	63 C		4	8,72
	201	99	6	MR CI 40 - 14 × 160	71 A		4	8,72
	252	79	5,6	MR CI 40 - 11 × 140	63 C		4	6,94
	252	79	5,6	MR CI 40 - 14 × 160	71 A		4	6,94
0,5	3,77	7 690	1,32	MR C3I 100 - 19 × 200	80 A		6	305
	4,72	6 150	1,9	MR C3I 100 - 19 × 200	80 A		6	244
	5,46	5 310	1,4	MR C3I 81 - 14 × 160	71 C		6	211
	5,89	4 920	2,65	MR C3I 100 - 19 × 200	80 A		6	195
	6,65	4 360	1,32	MR C3I 80 - 14 × 160	71 B		4	263
	6,65	4 360	1,4	MR C3I 81 - 14 × 160	71 B		4	263
	7,24	4 010	3	MR C3I 100 - 19 × 200	80 A		6	159
	8,27	3 580	3,35	MR ICI 100 - 19 × 200	80 A		6	139
	9	3 220	1,32	MR C3I 64 - 14 × 160	71 C		6	128
	8,31	3 490	1,8	MR C3I 80 - 14 × 160	71 B		4	211
	8,31	3 490	2	MR C3I 81 - 14 × 160	71 B		4	211
	9,31	3 180	1,5	MR ICI 80 - 14 × 160	71 C		6	124
	9,31	3 180	1,7	MR ICI 81 - 14 × 160	71 C		6	124
	10	2 950	3,35	MR ICI 100 - 19 × 200	80 A		6	114

Motor power P_1 hp 1)	Output speed n_2 rpm	Output torque T_2 lb in	Service factor fs	2)				Gear ratio i
0,5	10,8	2 680	1,06	MR C3I 63 - 14 × 160	71 B		4	162
	10,8	2 680	1,18	MR C3I 64 - 14 × 160	71 B		4	162
	11,3	2 570	1,7	MR C3I 64 - 19 × 200	80 A		6	102
	12,1	2 450	1	MR ICI 63 - 14 × 160	71 C		6	95
	12,1	2 450	1,18	MR ICI 64 - 14 × 160	71 C		6	95
	10,4	2 800	2	MR C3I 80 - 14 × 160	71 B		4	169
	10,4	2 800	2,24	MR C3I 81 - 14 × 160	71 B		4	169
	11,6	2 540	2	MR ICI 80 - 14 × 160	71 C		6	98,8
	11,6	2 540	2,36	MR ICI 81 - 14 × 160	71 C		6	98,8
	12,6	2 360	4,75	MR ICI 100 - 19 × 200	80 A		6	91,5
	13,7	2 120	1,6	MR C3I 63 - 14 × 160	71 B		4	128
	13,7	2 120	2	MR C3I 64 - 14 × 160	71 B		4	128
	14,7	2 010	1,06	MR ICI 63 - 14 × 160	71 B		4	119
	14,7	2 010	1,32	MR ICI 64 - 14 × 160	71 B		4	119
	14,5	2 050	1,18	MR ICI 63 - 14 × 160	71 C		6	79,5
	14,5	2 050	1,4	MR ICI 64 - 14 × 160	71 C		6	79,5
	13,2	2 200	3,35	MR C3I 80 - 14 × 160	71 B		4	133
	14,2	2 090	2,24	MR ICI 80 - 14 × 160	71 B		4	124
	14,2	2 090	2,5	MR ICI 81 - 14 × 160	71 B		4	124
	13,9	2 130	2,36	MR ICI 80 - 14 × 160	71 C		6	82,7
	13,9	2 130	2,8	MR ICI 81 - 14 × 160	71 C		6	82,7
	18,4	1 610	1,5	MR ICI 63 - 14 × 160	71 B		4	95
	18,4	1 610	1,8	MR ICI 64 - 14 × 160	71 B		4	95
	17,7	1 670	3	MR ICI 80 - 14 × 160	71 B		4	98,8
	17,7	1 670	3,55	MR ICI 81 - 14 × 160	71 B		4	98,8
	23,5	1 260	1,06	MR ICI 50 - 14 × 160	71 C		6	48,9
	23,5	1 260	1,06	MR ICI 50 - 19 × 200	80 A		6	48,9
	22	1 350	1,8	MR ICI 63 - 14 × 160	71 B		4	79,5
	22	1 350	2,12	MR ICI 64 - 14 × 160	71 B		4	79,5
	21,2	1 400	3,75	MR ICI 80 - 14 × 160	71 B		4	82,7
	25,9	1 140	1,18	MR ICI 50 - 11 × 140	71 B	B5R	4	67,5
	28,6	1 030	1,32	MR ICI 50 - 14 × 160	71 B		4	61,1
	27,5	1 080	2,24	MR ICI 63 - 14 × 160	71 B		4	63,6
	27,5	1 080	2,8	MR ICI 64 - 14 × 160	71 B		4	63,6
	35,8	825	1,6	MR ICI 50 - 14 × 160	71 B		4	48,9
	34,4	860	3	MR ICI 63 - 14 × 160	71 B		4	50,9
	36,8	820	2,5	MR CI 63 - 14 × 160	71 C		6	31,3
	36,8	820	2,8	MR CI 64 - 14 × 160	71 C		6	31,3
	36,8	820	2,5	MR CI 63 - 19 × 200	80 A		6	31,3
	36,8	820	2,8	MR CI 64 - 19 × 200	80 A		6	31,3
	44	675	2,12	MR ICI 50 - 14 × 160	71 B		4	39,8
	47,7	635	1,9	MR CI 50 - 14 × 160	71 C		6	24,1
	47,7	635	1,9	MR CI 50 - 19 × 200	80 A		6	24,1
	46	660	3,55	MR CI 63 - 14 × 160	71 C		6	25
	46	660	3,55	MR CI 63 - 19 × 200	80 A		6	25
	44,4	665	1,18	MR ICI 40 - 11 × 140	71 B	B5R	4	39,4
	50,5	585	1,25	MR ICI 40 - 14 × 160	71 B		4	34,7
	53,1	570	1,06	MR CI 40 - 14 × 160	71 C		6	21,7
	55,8	530	3	MR ICI 50 - 14 × 160	71 B		4	31,4
	59,7	505	2,65	MR CI 50 - 14 × 160	71 C		6	19,3
	59,7	505	2,65	MR CI 50 - 19 × 200	80 A		6	19,3
	56	540	3,75	MR CI 63 - 14 × 160	71 B		4	31,3
	57,3	515	1,18	MR ICI 40 - 11 × 140	71 B	B5R	4	30,5
	61,3	485	1,7	MR ICI 40 - 14 × 160	71 B		4	28,6
	66,9	455	1,32	MR CI 40 - 14 × 160	71 B		4	26,2
	72,6	415	2,8	MR CI 50 - 14 × 160	71 B		4	24,1
	79,1	375	1,7	MR ICI 40 - 14 × 160	71 B		4	22,1
	80,8	375	1,6	MR CI 40 - 14 × 160	71 B		4	21,7
	90,8	335	4	MR CI 50 - 14 × 160	71 B		4	19,3
	98	310	1,8	MR CI 40 - 14 × 160	71 B		4	17,9
	112	270	4,75	MR CI 50 - 14 × 160	71 B		4	15,7
	128	235	3	MR CI 40 - 14 × 160	71 B		4	13,7
	155	195	4	MR CI 40 - 14 × 160	71 B		4	11,3
	170	180	6,7	MR CI 50 - 14 × 160	71 B		4	10,3
	201	150	4	MR CI 40 - 14 × 160	71 B		4	8,72
	252	120	3,75	MR CI 40 - 14 × 160	71 B		4	6,94

1) Powers valid for continuous duty S1; **increase possible** for duty cycles S2 ... S10 (see ch. 1 «General specifications»): in which case T_2 increases and fs decreases.
2) For complete designation when ordering see ch. 2.
* Mounting position **B5R** (see ch. 1.2).

13 - Bevel helical gearmotor selection tables

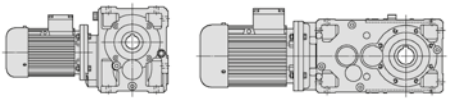

Motor power P_1 hp 1)	Output speed n_2 rpm	Output torque T_2 lb in	Service factor fs					Gear ratio i
0,75	4,72	9 220	1,25	MR C3I 100 - 19 × 200	80 B	6		244
	5,74	7 580	1,32	MR C3I 100 - 19 × 200	80 A	4		305
	5,89	7 380	1,8	MR C3I 100 - 19 × 200	80 B	6		195
	7,18	6 060	1,9	MR C3I 100 - 19 × 200	80 A	4		244
	8,27	5 370	2,24	MR ICI 100 - 19 × 200	80 B	6		139
	8,31	5 230	1,25	MR C3I 80 - 14 × 160	71 C	4		211
	8,31	5 230	1,4	MR C3I 81 - 14 × 160	71 C	4		211
	8,33	5 220	1,06	MR C3I 80 - 19 × 200	80 A	4		210
	8,33	5 220	1,18	MR C3I 81 - 19 × 200	80 A	4		210
	8,97	4 850	2,65	MR C3I 100 - 19 × 200	80 A	4		195
	10	4 420	2,24	MR ICI 100 - 19 × 200	80 B	6		114
	10,4	4 190	1,4	MR C3I 80 - 14 × 160	71 C	4		169
	10,4	4 190	1,5	MR C3I 81 - 14 × 160	71 C	4		169
	10,4	4 170	1,5	MR C3I 80 - 19 × 200	80 A	4		168
	10,4	4 170	1,7	MR C3I 81 - 19 × 200	80 A	4		168
	11	3 950	3	MR C3I 100 - 19 × 200	80 A	4		159
	12,6	3 530	3,15	MR ICI 100 - 19 × 200	80 A	4		139
	13,7	3 170	1,32	MR C3I 64 - 14 × 160	71 C	4		128
	13,2	3 310	2,24	MR C3I 80 - 14 × 160	71 C	4		133
	13,2	3 310	2,65	MR C3I 81 - 14 × 160	71 C	4		133
	13	3 350	1,7	MR C3I 80 - 19 × 200	80 A	4		135
	13	3 350	1,9	MR C3I 81 - 19 × 200	80 A	4		135
	14,2	3 140	1,5	MR ICI 80 - 14 × 160	71 C	4		124
	14,2	3 140	1,7	MR ICI 81 - 14 × 160	71 C	4		124
	13,9	3 190	1,5	MR ICI 80 - 19 × 200	80 B	6		82,5
	13,9	3 190	1,7	MR ICI 81 - 19 × 200	80 B	6		82,5
	15,3	2 910	3,35	MR ICI 100 - 19 × 200	80 A	4		114
	17,2	2 530	1,4	MR C3I 63 - 19 × 200	80 A	4		102
	17,2	2 530	1,7	MR C3I 64 - 19 × 200	80 A	4		102
	18,4	2 410	1	MR ICI 63 - 14 × 160	71 C	4		95
	18,4	2 410	1,18	MR ICI 64 - 14 × 160	71 C	4		95
	18,1	2 450	1	MR ICI 63 - 19 × 200	80 B	6		63,5
	18,1	2 450	1,18	MR ICI 64 - 19 × 200	80 B	6		63,5
	16,5	2 640	2,8	MR C3I 80 - 19 × 200	80 A	4		106
	16,5	2 640	3,35	MR C3I 81 - 19 × 200	80 A	4		106
	17,7	2 510	2	MR ICI 80 - 14 × 160	71 C	4		98,8
	17,7	2 510	2,36	MR ICI 81 - 14 × 160	71 C	4		98,8
	17,4	2 550	2	MR ICI 80 - 19 × 200	80 B	6		66
	17,4	2 550	2,36	MR ICI 81 - 19 × 200	80 B	6		66
	19,1	2 320	4,75	MR ICI 100 - 19 × 200	80 A	4		91,5
	22	2 020	1,18	MR ICI 63 - 14 × 160	71 C	4		79,5
	22	2 020	1,5	MR ICI 64 - 14 × 160	71 C	4		79,5
	22,1	2 010	1,06	MR ICI 63 - 19 × 200	80 A	4		79,3
	22,1	2 010	1,32	MR ICI 64 - 19 × 200	80 A	4		79,3
	22,7	1 960	1,25	MR ICI 63 - 19 × 200	80 B	6		50,8
	22,7	1 960	1,5	MR ICI 64 - 19 × 200	80 B	6		50,8
	21,2	2 100	2,5	MR ICI 80 - 14 × 160	71 C	4		82,7
	21,2	2 100	2,8	MR ICI 81 - 14 × 160	71 C	4		82,7
	21,2	2 090	2,24	MR ICI 80 - 19 × 200	80 A	4		82,5
	21,2	2 090	2,5	MR ICI 81 - 19 × 200	80 A	4		82,5
	21,8	2 040	2,5	MR ICI 80 - 19 × 200	80 B	6		52,8
	21,8	2 040	3	MR ICI 81 - 19 × 200	80 B	6		52,8
	22,8	1 950	5,6	MR ICI 100 - 19 × 200	80 A	4		76,7
	27,5	1 620	1,5	MR ICI 63 - 14 × 160	71 C	4		63,6
	27,5	1 620	1,8	MR ICI 64 - 14 × 160	71 C	4		63,6
	27,6	1 610	1,5	MR ICI 63 - 19 × 200	80 A	4		63,5
	27,6	1 610	1,8	MR ICI 64 - 19 × 200	80 A	4		63,5
	26,5	1 680	3	MR ICI 80 - 19 × 200	80 A	4		66
	35,8	1 240	1,06	MR ICI 50 - 14 × 160	71 C	4		48,9
	35,8	1 240	1,06	MR ICI 50 - 19 × 200	80 A	4		48,9
	34,4	1 290	2	MR ICI 63 - 14 × 160	71 C	4		50,9
	34,4	1 290	2,36	MR ICI 64 - 14 × 160	71 C	4		50,9
	34,5	1 290	1,9	MR ICI 63 - 19 × 200	80 A	4		50,8
	34,5	1 290	2,24	MR ICI 64 - 19 × 200	80 A	4		50,8
	36,8	1 230	1,7	MR CI 63 - 19 × 200	80 B	6		31,3
	36,8	1 230	1,8	MR CI 64 - 19 × 200	80 B	6		31,3
	33,1	1 340	3,75	MR ICI 80 - 19 × 200	80 A	4		52,8
	35,4	1 280	3,15	MR CI 80 - 19 × 200	80 B	6		32,5

Motor power P_1 hp 1)	Output speed n_2 rpm	Output torque T_2 lb in	Service factor fs					Gear ratio i
0,75	44	1 010	1,4	MR ICI 50 - 14 × 160	71 C	4		39,8
	44,7	995	1,32	MR ICI 50 - 19 × 200	80 A	4		39,1
	47,7	950	1,32	MR CI 50 - 19 × 200	80 B	6		24,1
	43,1	1 030	2,5	MR ICI 63 - 19 × 200	80 A	4		40,6
	46	985	2,36	MR CI 63 - 19 × 200	80 B	6		25
	46	985	2,8	MR CI 64 - 19 × 200	80 B	6		25
	55,8	795	2	MR ICI 50 - 14 × 160	71 C	4		31,4
	54,9	810	1,8	MR ICI 50 - 19 × 200	80 A	4		31,9
	59,7	760	1,7	MR CI 50 - 19 × 200	80 B	6		19,3
	54,6	815	3,35	MR ICI 63 - 19 × 200	80 A	4		32
	56	810	2,5	MR CI 63 - 14 × 160	71 C	4		31,3
	56	810	2,8	MR CI 64 - 14 × 160	71 C	4		31,3
	56	810	2,5	MR CI 63 - 19 × 200	80 A	4		31,3
	56	810	2,8	MR CI 64 - 19 × 200	80 A	4		31,3
	57,5	790	3	MR CI 63 - 19 × 200	80 B	6		20
	69,7	640	2,5	MR ICI 50 - 19 × 200	80 A	4		25,1
	72,6	625	1,9	MR CI 50 - 14 × 160	71 C	4		24,1
	72,6	625	1,9	MR CI 50 - 19 × 200	80 A	4		24,1
	70	650	3,55	MR CI 63 - 14 × 160	71 C	4		25
	70	650	3,55	MR CI 63 - 19 × 200	80 A	4		25
	79,1	560	1,12	MR ICI 40 - 14 × 160	71 C	4		22,1
	80,8	560	1,06	MR CI 40 - 14 × 160	71 C	4		21,7
	83,7	530	3	MR ICI 50 - 19 × 200	80 A	4		20,9
	90,8	500	2,65	MR CI 50 - 14 × 160	71 C	4		19,3
	90,8	500	2,65	MR CI 50 - 19 × 200	80 A	4		19,3
	98	465	1,25	MR CI 40 - 14 × 160	71 C	4		17,9
	112	405	3,15	MR CI 50 - 14 × 160	71 C	4		15,7
	112	405	3,15	MR CI 50 - 19 × 200	80 A	4		15,7
	128	355	2	MR CI 40 - 14 × 160	71 C	4		13,7
	141	320	4,5	MR CI 50 - 14 × 160	71 C	4		12,4
	141	320	4,5	MR CI 50 - 19 × 200	80 A	4		12,4
	155	290	2,65	MR CI 40 - 14 × 160	71 C	4		11,3
	170	265	4,5	MR CI 50 - 14 × 160	71 C	4		10,3
	170	265	4,5	MR CI 50 - 19 × 200	80 A	4		10,3
	201	225	2,65	MR CI 40 - 14 × 160	71 C	4		8,72
	217	210	5	MR CI 50 - 14 × 160	71 C	4		8,06
	217	210	5	MR CI 50 - 19 × 200	80 A	4		8,06
	252	180	2,5	MR CI 40 - 14 × 160	71 C	4		6,94
	271	165	4,5	MR CI 50 - 14 × 160	71 C	4		6,46
	271	165	4,5	MR CI 50 - 19 × 200	80 A	4		6,46
1	3,05	19 000	1,18	MR C3I 125 - 24 × 200	100 LA	B5R	6	377
	3,77	15 400	1,4	MR C3I 125 - 24 × 200	100 LA	B5R	6	305
	4,71	12 300	1,9	MR C3I 125 - 24 × 200	100 LA	B5R	6	244
	5,89	9 840	1,32	MR C3I 100 - 19 × 200	80 C	⊠ 70%	6	195
	5,91	9 810	1,18	MR C3I 100 - 24 × 200	100 LA	B5R	6	195
	5,89	9 850	2,8	MR C3I 125 - 24 × 200	100 LA	B5R	6	195
	7,18	8 080	1,4	MR C3I 100 - 19 × 200	90 S	B5R	4	244
	8,27	7 170	1,7	MR ICI 100 - 19 × 200	80 C	⊠ 70%	6	139
	7,36	7 880	3,35	MR C3I 125 - 24 × 200	100 LA	B5R	6	156
	8,97	6 460	2	MR C3I 100 - 19 × 200	90 S	B5R	4	195
	10	5 900	1,7	MR ICI 100 - 19 × 200	80 C	⊠ 70%	6	114
	9,54	6 210	3,35	MR ICI 125 - 24 × 200	100 LA	B5R	6	121
	10,4	5 570	1,25	MR C3I 81 - 19 × 200	90 S	B5R	4	168
	10,8	5 350	1,4	MR C3I 80 - 19 × 200	80 C	⊠ 70%	6	106
	10,8	5 350	1,6	MR C3I 81 - 19 × 200	80 C	⊠ 70%	6	106
	11	5 260	2,24	MR C3I 100 - 19 × 200	90 S	B5R	4	159
	12,6	4 710	2,36	MR ICI 100 - 19 × 200	90 S	B5R	4	139
	11,9	4 970	4,5	MR ICI 125 - 24 × 200	100 LA	B5R	6	96,4

1) Powers valid for continuous duty S1; **increase possible**
for duty cycles S2 ... S10 (see ch. 1 «General specifications»): in which case T_2 increases and fs decreases.
2) For complete designation when ordering see ch. 2.
* Mounting position **B5R** (see ch. 1.2).

13 - Bevel helical gearmotor selection tables

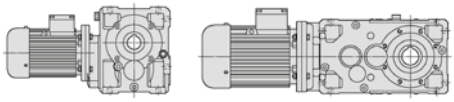

Motor power P_1 hp 1)	Output speed n_2 rpm	Output torque T_2 lb in	Service factor fs	2)				Gear ratio i
1	13	4 460	1,25	MR C3I 80 - 19 × 200	90 S	B5R	4	135
	13	4 460	1,4	MR C3I 81 - 19 × 200	90 S	B5R	4	135
	14,2	4 180	1,12	MR ICI 80 - 14 × 160	90 S	B5S	4	124
	14,2	4 180	1,25	MR ICI 81 - 14 × 160	90 S	B5S	4	124
	13,9	4 250	1,12	MR ICI 80 - 19 × 200	80 C	⅔ 70%	6	82,5
	13,9	4 250	1,25	MR ICI 81 - 19 × 200	80 C	⅔ 70%	6	82,5
	14	4 150	3,75	MR C3I 100 - 19 × 200	90 S	B5R	4	125
	15,3	3 870	2,5	MR ICI 100 - 19 × 200	90 S	B5R	4	114
	15	3 950	2,8	MR ICI 100 - 19 × 200	80 C	⅔ 70%	6	76,7
	14,7	4 020	5,6	MR ICI 125 - 24 × 200	100 LA	B5R	6	78,1
	16,5	3 520	2,12	MR C3I 80 - 19 × 200	90 S	B5R	4	106
	16,5	3 520	2,5	MR C3I 81 - 19 × 200	90 S	B5R	4	106
	17,7	3 340	1,5	MR ICI 80 - 14 × 160	90 S	B5S	4	98,8
	17,7	3 340	1,8	MR ICI 81 - 14 × 160	90 S	B5S	4	98,8
	17,4	3 400	1,5	MR ICI 80 - 19 × 200	80 C	⅔ 70%	6	66
	17,4	3 400	1,7	MR ICI 81 - 19 × 200	80 C	⅔ 70%	6	66
	17,7	3 350	1,4	MR ICI 80 - 24 × 200	100 LA	B5R	6	65
	17,7	3 350	1,6	MR ICI 81 - 24 × 200	100 LA	B5R	6	65
	19,1	3 100	3,55	MR ICI 100 - 19 × 200	90 S	B5R	4	91,5
	22	2 690	1,06	MR ICI 64 - 14 × 160	90 S	B5S	4	79,5
	22,7	2 620	1,12	MR ICI 64 - 19 × 200	80 C	⅔ 70%	6	50,8
	23	2 580	1,12	MR ICI 64 - 24 × 200	100 LA	B5R	6	50
	21,2	2 800	1,8	MR ICI 80 - 14 × 160	90 S	B5S	4	82,7
	21,2	2 800	2,12	MR ICI 81 - 14 × 160	90 S	B5S	4	82,7
	21,2	2 790	1,7	MR ICI 80 - 19 × 200	90 S	B5R	4	82,5
	21,2	2 790	1,9	MR ICI 81 - 19 × 200	90 S	B5R	4	82,5
	21,8	2 720	1,9	MR ICI 80 - 19 × 200	80 C	⅔ 70%	6	52,8
	21,8	2 720	2,24	MR ICI 81 - 19 × 200	80 C	⅔ 70%	6	52,8
	22,1	2 680	1,9	MR ICI 80 - 24 × 200	100 LA	B5R	6	52
	22,1	2 680	2,24	MR ICI 81 - 24 × 200	100 LA	B5R	6	52
	22,8	2 590	4,25	MR ICI 100 - 19 × 200	90 S	B5R	4	76,7
	27,6	2 150	1,12	MR ICI 63 - 19 × 200	90 S	B5R	4	63,5
	27,6	2 150	1,32	MR ICI 64 - 19 × 200	90 S	B5R	4	63,5
	26,5	2 230	2,24	MR ICI 80 - 19 × 200	90 S	B5R	4	66
	26,5	2 230	2,65	MR ICI 81 - 19 × 200	90 S	B5R	4	66
	34,5	1 720	1,4	MR ICI 63 - 19 × 200	90 S	B5R	4	50,8
	34,5	1 720	1,7	MR ICI 64 - 19 × 200	90 S	B5R	4	50,8
	35,9	1 650	1,7	MR ICI 63 - 19 × 200	80 C	⅔ 70%	6	32
	35,9	1 650	2,12	MR ICI 64 - 19 × 200	80 C	⅔ 70%	6	32
	36,8	1 640	1,25	MR CI 63 - 19 × 200	80 C	⅔ 70%	6	31,3
	36,8	1 640	1,4	MR CI 64 - 19 × 200	80 C	⅔ 70%	6	31,3
	36,8	1 640	1,25	MR CI 63 - 24 × 200	100 LA	B5R	6	31,3
	36,8	1 640	1,4	MR CI 64 - 24 × 200	100 LA	B5R	6	31,3
	33,1	1 790	2,8	MR ICI 80 - 19 × 200	90 S	B5R	4	52,8
	35,4	1 710	2,5	MR CI 80 - 19 × 200	80 C	⅔ 70%	6	32,5
	35,4	1 710	2,5	MR CI 80 - 24 × 200	100 LA	B5R	6	32,5
	44	1 350	1,06	MR ICI 50 - 14 × 160	90 S	B5S	4	39,8
	45,8	1 290	1,25	MR ICI 50 - 19 × 200	80 C	⅔ 70%	6	25,1
	43,1	1 370	1,9	MR ICI 63 - 19 × 200	90 S	B5R	4	40,6
	43,1	1 370	2,24	MR ICI 64 - 19 × 200	90 S	B5R	4	40,6
	46	1 320	1,8	MR CI 63 - 19 × 200	80 C	⅔ 70%	6	25
	46	1 320	2,12	MR CI 64 - 19 × 200	80 C	⅔ 70%	6	25
	46	1 320	1,8	MR CI 63 - 24 × 200	100 LA	B5R	6	25
	46	1 320	2,12	MR CI 64 - 24 × 200	100 LA	B5R	6	25
	41,4	1 430	3,75	MR ICI 80 - 19 × 200	90 S	B5R	4	42,3
	44,2	1 370	3,75	MR CI 80 - 19 × 200	80 C	⅔ 70%	6	26
	44,2	1 370	3,75	MR CI 80 - 24 × 200	100 LA	B5R	6	26
	54,9	1 080	1,32	MR ICI 50 - 19 × 200	90 S	B5R	4	31,9
	59,7	1 010	1,32	MR CI 50 - 19 × 200	80 C	⅔ 70%	6	19,3
	54,6	1 080	2,5	MR ICI 63 - 19 × 200	90 S	B5R	4	32
	54,6	1 080	3,15	MR ICI 64 - 19 × 200	90 S	B5R	4	32
	56	1 080	1,9	MR CI 63 - 19 × 200	90 S	B5R	4	31,3
	56	1 080	2,12	MR CI 64 - 19 × 200	90 S	B5R	4	31,3
	57,5	1 050	2,24	MR CI 63 - 19 × 200	80 C	⅔ 70%	6	20
	57,5	1 050	2,8	MR CI 64 - 19 × 200	80 C	⅔ 70%	6	20
	57,5	1 050	2,24	MR CI 63 - 24 × 200	100 LA	B5R	6	20
	57,5	1 050	2,8	MR CI 64 - 24 × 200	100 LA	B5R	6	20
	53,8	1 120	3,55	MR CI 80 - 19 × 200	90 S	B5R	4	32,5

Motor power P_1 hp 1)	Output speed n_2 rpm	Output torque T_2 lb in	Service factor fs	2)				Gear ratio i
1	69,7	850	1,8	MR ICI 50 - 19 × 200	90 S	B5R	4	25,1
	72,6	835	1,4	MR CI 50 - 19 × 200	90 S	B5R	4	24,1
	70	865	2,8	MR CI 63 - 19 × 200	90 S	B5R	4	25
	83,7	710	2,24	MR ICI 50 - 19 × 200	90 S	B5R	4	20,9
	90,8	665	2	MR CI 50 - 19 × 200	90 S	B5R	4	19,3
	87,5	690	3,35	MR CI 63 - 19 × 200	90 S	B5R	4	20
	112	545	2,36	MR CI 50 - 19 × 200	90 S	B5R	4	15,7
	109	555	4,25	MR CI 63 - 19 × 200	90 S	B5R	4	16
	128	475	1,5	MR CI 40 - 14 × 160	71 D	⅔ 70%	4	13,7
	141	430	3,35	MR CI 50 - 19 × 200	90 S	B5R	4	12,4
	155	390	2	MR CI 40 - 14 × 160	71 D	⅔ 70%	4	11,3
	170	355	3,35	MR CI 50 - 19 × 200	90 S	B5R	4	10,3
	201	300	2	MR CI 40 - 14 × 160	71 D	⅔ 70%	4	8,72
	217	280	3,75	MR CI 50 - 19 × 200	90 S	B5R	4	8,06
	252	240	1,9	MR CI 40 - 14 × 160	71 D	⅔ 70%	4	6,94
	271	225	3,35	MR CI 50 - 19 × 200	90 S	B5R	4	6,46
1,5	4,65	18 700	1,18	MR C3I 125 - 24 × 200	90 L		4	377
	5,73	15 150	1,4	MR C3I 125 - 24 × 200	90 L		4	305
	7,17	12 150	1,9	MR C3I 125 - 24 × 200	90 L		4	244
	8,97	9 700	1,32	MR C3I 100 - 19 × 200	80 C	⅔ 70%	4	195
	8,99	9 670	1,18	MR C3I 100 - 24 × 200	90 L		4	195
	8,96	9 710	2,8	MR C3I 125 - 24 × 200	90 L		4	195
	9,54	9 310	2,24	MR ICI 125 - 24 × 200	112 M	B5R	6	121
	11	7 900	1,5	MR C3I 100 - 19 × 200	80 C	⅔ 70%	4	159
	11,2	7 740	1,7	MR C3I 100 - 24 × 200	90 L		4	156
	12,6	7 060	1,6	MR ICI 100 - 19 × 200	80 C	⅔ 70%	4	139
	11,2	7 770	3,35	MR C3I 125 - 24 × 200	90 L		4	156
	11,9	7 450	3,15	MR ICI 125 - 24 × 200	112 M	B5R	6	96,4
	14	6 230	2,5	MR C3I 100 - 19 × 200	80 C	⅔ 70%	4	125
	13,8	6 300	1,9	MR C3I 100 - 24 × 200	90 L		4	127
	15,3	5 810	1,7	MR ICI 100 - 19 × 200	80 C	⅔ 70%	4	114
	15	5 910	1,6	MR ICI 100 - 24 × 200	112 M	B5R	6	76,4
	14,5	6 120	3,35	MR ICI 125 - 24 × 200	90 L		4	121
	16,5	5 280	1,4	MR C3I 80 - 19 × 200	80 C	⅔ 70%	4	106
	16,5	5 280	1,6	MR C3I 81 - 19 × 200	80 C	⅔ 70%	4	106
	17,5	4 970	3,15	MR C3I 100 - 24 × 200	90 L		4	99,9
	19,1	4 650	2,36	MR ICI 100 - 19 × 200	80 C	⅔ 70%	4	91,5
	18,8	4 720	2,36	MR ICI 100 - 24 × 200	90 L		4	92,9
	18,8	4 730	2,36	MR ICI 100 - 24 × 200	112 M	B5R	6	61,2
	18,1	4 900	4,5	MR ICI 125 - 24 × 200	90 L		4	96,4
	21,2	4 190	1,12	MR ICI 80 - 19 × 200	80 C	⅔ 70%	4	82,5
	21,2	4 190	1,25	MR ICI 81 - 19 × 200	80 C	⅔ 70%	4	82,5
	22,1	4 020	1,25	MR ICI 80 - 24 × 200	112 M	B5R	6	52
	22,1	4 020	1,5	MR ICI 81 - 24 × 200	112 M	B5R	6	52
	22,8	3 890	2,8	MR ICI 100 - 19 × 200	80 C	⅔ 70%	4	76,7
	22,9	3 880	2,5	MR ICI 100 - 24 × 200	90 L		4	76,4
	23,5	3 780	3,15	MR ICI 100 - 24 × 200	112 M	B5R	6	48,9
	26,5	3 350	1,5	MR ICI 80 - 19 × 200	80 C	⅔ 70%	4	66
	26,5	3 350	1,8	MR ICI 81 - 19 × 200	80 C	⅔ 70%	4	66
	26,9	3 300	1,4	MR ICI 80 - 24 × 200	90 L		4	65
	26,9	3 300	1,6	MR ICI 81 - 24 × 200	90 L		4	65
	27,6	3 210	1,6	MR ICI 80 - 24 × 200	112 M	B5R	6	41,6
	27,6	3 210	1,8	MR ICI 81 - 24 × 200	112 M	B5R	6	41,6
	28,5	3 110	4	MR ICI 100 - 19 × 200	80 C	⅔ 70%	4	61,3
	28,6	3 110	3,55	MR ICI 100 - 24 × 200	90 L		4	61,2
	31,4	2 890	3,55	MR CI 100 - 24 × 200	112 M	B5R	6	36,6

1) Powers valid for continuous duty S1; **increase possible** for duty cycles S2 ... S10 (see ch. 1 «General specifications»): in which case T_2 increases and fs decreases.
2) For complete designation when ordering see ch. 2.
* Mounting position **B5R** (see ch. 1.2).

13 - Bevel helical gearmotor selection tables

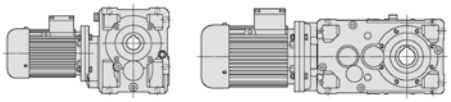

Motor power P_1 hp 1)	Output speed n_2 rpm	Output torque T_2 lb in	Service factor fs							Gear ratio i
1,5	34,5	2 580	1,12	MR ICI 64 - 19 × 200	80 C	⇄ 70%		4		50,8
	35	2 540	1,12	MR ICI 64 - 24 × 200	90 L			4		50
	35,9	2 470	1,06	MR ICI 63 - 24 × 200	112 M		B5R	6		32
	33,1	2 680	1,9	MR ICI 80 - 19 × 200	80 C	⇄ 70%		4		52,8
	33,1	2 680	2,24	MR ICI 81 - 19 × 200	80 C	⇄ 70%		4		52,8
	33,7	2 640	1,9	MR ICI 80 - 24 × 200	90 L			4		52
	33,7	2 640	2,24	MR ICI 81 - 24 × 200	90 L			4		52
	35,4	2 560	1,6	MR CI 80 - 24 × 200	112 M		B5R	6		32,5
	35,4	2 560	2	MR CI 81 - 24 × 200	112 M		B5R	6		32,5
	35	2 540	4,5	MR ICI 100 - 19 × 200	80 C	⇄ 70%		4		49,9
	35,8	2 480	4,75	MR ICI 100 - 24 × 200	90 L			4		48,9
	38,2	2 380	4	MR CI 100 - 24 × 200	112 M		B5R	6		30,1
	43,1	2 060	1,25	MR ICI 63 - 19 × 200	80 C	⇄ 70%		4		40,6
	43,1	2 060	1,5	MR ICI 64 - 19 × 200	80 C	⇄ 70%		4		40,6
	43,8	2 030	1,18	MR ICI 63 - 24 × 200	90 L			4		40
	43,8	2 030	1,4	MR ICI 64 - 24 × 200	90 L			4		40
	45,6	1 950	1,4	MR ICI 63 - 24 × 200	112 M		B5R	6		25,2
	45,6	1 950	1,7	MR ICI 64 - 24 × 200	112 M		B5R	6		25,2
	46	1 970	1,18	MR CI 63 - 24 × 200	112 M		B5R	6		25
	46	1 970	1,4	MR CI 64 - 24 × 200	112 M		B5R	6		25
	41,4	2 150	2,5	MR ICI 80 - 19 × 200	80 C	⇄ 70%		4		42,3
	41,4	2 150	2,8	MR ICI 81 - 19 × 200	80 C	⇄ 70%		4		42,3
	42,1	2 110	2,36	MR ICI 80 - 24 × 200	90 L			4		41,6
	42,1	2 110	2,8	MR ICI 81 - 24 × 200	90 L			4		41,6
	44,2	2 050	2,5	MR CI 80 - 24 × 200	112 M		B5R	6		26
	44,2	2 050	2,8	MR CI 81 - 24 × 200	112 M		B5R	6		26
	54,6	1 630	1,7	MR ICI 63 - 19 × 200	80 C	⇄ 70%		4		32
	54,6	1 630	2,12	MR ICI 64 - 19 × 200	80 C	⇄ 70%		4		32
	54,7	1 620	1,6	MR ICI 63 - 24 × 200	90 L			4		32
	54,7	1 620	1,8	MR ICI 64 - 24 × 200	90 L			4		32
	56	1 620	1,25	MR CI 63 - 19 × 200	80 C	⇄ 70%		4		31,3
	56	1 620	1,4	MR CI 64 - 19 × 200	80 C	⇄ 70%		4		31,3
	56	1 620	1,25	MR CI 63 - 24 × 200	90 L			4		31,3
	56	1 620	1,4	MR CI 64 - 24 × 200	90 L			4		31,3
	57,5	1 580	1,5	MR CI 63 - 24 × 200	112 M		B5R	6		20
	57,5	1 580	1,9	MR CI 64 - 24 × 200	112 M		B5R	6		20
	52,5	1 690	3,55	MR ICI 80 - 19 × 200	80 C	⇄ 70%		4		33,4
	52,5	1 690	3,15	MR ICI 80 - 24 × 200	90 L			4		33,3
	53,8	1 690	2,5	MR CI 80 - 19 × 200	80 C	⇄ 70%		4		32,5
	53,8	1 690	3	MR CI 81 - 19 × 200	80 C	⇄ 70%		4		32,5
	53,8	1 690	2,5	MR CI 80 - 24 × 200	90 L			4		32,5
	53,8	1 690	3	MR CI 81 - 24 × 200	90 L			4		32,5
	55,3	1 640	3,15	MR CI 80 - 24 × 200	112 M		B5R	6		20,8
	58,1	1 560	6	MR CI 100 - 24 × 200	90 L			4		30,1
	69,7	1 280	1,25	MR ICI 50 - 19 × 200	80 C	⇄ 70%		4		25,1
	72,6	1 250	0,95	MR CI 50 - 19 × 200	80 C	⇄ 70%		4		24,1
	69,4	1 280	2,12	MR ICI 63 - 24 × 200	90 L			4		25,2
	69,4	1 280	2,65	MR ICI 64 - 24 × 200	90 L			4		25,2
	70	1 300	1,8	MR CI 63 - 19 × 200	80 C	⇄ 70%		4		25
	70	1 300	2,12	MR CI 64 - 19 × 200	80 C	⇄ 70%		4		25
	70	1 300	1,8	MR CI 63 - 24 × 200	90 L			4		25
	70	1 300	2,12	MR CI 64 - 24 × 200	90 L			4		25
	67,3	1 350	3,75	MR CI 80 - 19 × 200	80 C	⇄ 70%		4		26
	67,3	1 350	3,75	MR CI 80 - 24 × 200	90 L			4		26
	83,7	1 060	1,5	MR ICI 50 - 19 × 200	80 C	⇄ 70%		4		20,9
	90,8	1 000	1,32	MR CI 50 - 19 × 200	80 C	⇄ 70%		4		19,3
	84,4	1 050	2,65	MR ICI 63 - 24 × 200	90 L			4		20,7
	84,4	1 050	3	MR ICI 64 - 24 × 200	90 L			4		20,7
	87,5	1 040	2,24	MR CI 63 - 19 × 200	80 C	⇄ 70%		4		20
	87,5	1 040	2,8	MR CI 64 - 19 × 200	80 C	⇄ 70%		4		20
	87,5	1 040	2,24	MR CI 63 - 24 × 200	90 L			4		20
	87,5	1 040	2,8	MR CI 64 - 24 × 200	90 L			4		20
	112	815	1,5	MR CI 50 - 19 × 200	80 C	⇄ 70%		4		15,7
	109	830	2,8	MR CI 63 - 19 × 200	80 C	⇄ 70%		4		16
	109	830	2,8	MR CI 63 - 24 × 200	90 L			4		16
	141	640	2,24	MR CI 50 - 19 × 200	80 C	⇄ 70%		4		12,4
	139	655	4,25	MR CI 63 - 19 × 200	80 C	⇄ 70%		4		12,6
	139	655	4,25	MR CI 63 - 24 × 200	90 L			4		12,6

Motor power P_1 hp 1)	Output speed n_2 rpm	Output torque T_2 lb in	Service factor fs							Gear ratio i
1,5	170	535	2,24	MR CI 50 - 19 × 200	80 C	⇄ 70%		4		10,3
	169	535	4,5	MR CI 63 - 19 × 200	80 C	⇄ 70%		4		10,4
	169	535	4,5	MR CI 63 - 24 × 200	90 L			4		10,4
	217	420	2,5	MR CI 50 - 19 × 200	80 C	⇄ 70%		4		8,06
	219	415	4,5	MR CI 63 - 19 × 200	80 C	⇄ 70%		4		7,98
	219	415	4,5	MR CI 63 - 24 × 200	90 L			4		7,98
	271	335	2,24	MR CI 50 - 19 × 200	80 C	⇄ 70%		4		6,46
	277	325	4,5	MR CI 63 - 19 × 200	80 C	⇄ 70%		4		6,31
	277	325	4,5	MR CI 63 - 24 × 200	90 L			4		6,31
2	5,89	19 700	1,4	MR C3I 125 - 24 × 200	90 LC	⇄ 70%		6		195
	5,81	20 000	1,18	MR C3I 125 - 28 × 250	112 MB			6		198
	7,17	16 200	1,4	MR C3I 125 - 24 × 200	90 LB			4		244
	7,64	15 500	2,36	MR C2I 140 - 28 × 250	112 MB			6		151
	7,48	15 850	3,55	MR C2I 160 - 28 × 250	112 MB			6		154
	8,96	12 950	2,12	MR C3I 125 - 24 × 200	90 LB			4		195
	9,54	12 400	1,7	MR ICI 125 - 24 × 200	90 LC	⇄ 70%		6		121
	9,37	12 650	3	MR C2I 140 - 28 × 250	112 MB			6		123
	9,34	12 700	3,15	MR ICI 160 - 28 × 250	112 MB			6		123
	11,2	10 300	1,25	MR C3I 100 - 24 × 200	90 LB			4		156
	12,6	9 420	1,18	MR ICI 100 - 19 × 200	90 LB		B5R	4		139
	12,4	9 570	1,18	MR ICI 100 - 24 × 200	90 LC	⇄ 70%		6		92,9
	11,2	10 350	2,5	MR C3I 125 - 24 × 200	90 LB			4		156
	11,9	9 940	2,36	MR ICI 125 - 24 × 200	90 LC	⇄ 70%		6		96,4
	11,8	10 050	2,12	MR ICI 125 - 28 × 250	112 MB			6		97,7
	11,9	9 940	2,65	MR ICI 140 - 24 × 200	90 LC	⇄ 70%		6		96,4
	11,7	10 100	3,75	MR C2I 140 - 28 × 250	112 MB			6		98,2
	13,1	9 040	4,25	MR C2I 140 - 28 × 250	112 MB			6		87,8
	13,8	8 400	1,4	MR C3I 100 - 24 × 200	90 LB			4		127
	15,3	7 750	1,25	MR ICI 100 - 19 × 200	90 LB		B5R	4		114
	15	7 880	1,25	MR ICI 100 - 24 × 200	90 LC	⇄ 70%		6		76,4
	15,7	7 540	1,5	MR ICI 100 - 28 × 250	112 MB			6		73,2
	14,2	8 160	3,75	MR C3I 125 - 24 × 200	90 LB			4		123
	14,5	8 160	2,5	MR ICI 125 - 24 × 200	90 LB			4		121
	14,7	8 050	3,35	MR ICI 140 - 28 × 250	112 MB			6		78,1
	14,6	8 100	5,3	MR C2I 140 - 28 × 250	112 MB			6		78,6
	17,5	6 620	2,36	MR C3I 100 - 24 × 200	90 LB			4		99,9
	19,1	6 200	1,8	MR ICI 100 - 19 × 200	90 LB		B5R	4		91,5
	18,8	6 290	1,8	MR ICI 100 - 24 × 200	90 LB			4		92,9
	18,8	6 300	1,8	MR ICI 100 - 24 × 200	90 LC	⇄ 70%		6		61,2
	19,1	6 210	1,5	MR ICI 100 - 28 × 250	112 MB			6		60,2
	18,1	6 530	3,55	MR ICI 125 - 24 × 200	90 LB			4		96,4
	22,1	5 360	1,12	MR ICI 81 - 24 × 200	90 LC	⇄ 70%		6		52
	22,8	5 190	2,12	MR ICI 100 - 19 × 200	90 LB		B5R	4		76,7
	22,9	5 180	1,8	MR ICI 100 - 24 × 200	90 LB			4		76,4
	23,5	5 040	2,5	MR ICI 100 - 24 × 200	90 LC	⇄ 70%		6		48,9
	23,9	4 960	2,24	MR ICI 100 - 28 × 250	112 MB			6		48,2
	22,4	5 290	4,25	MR ICI 125 - 24 × 200	90 LB			4		78,1
	26,5	4 470	1,12	MR ICI 80 - 19 × 200	90 LB		B5R	4		66
	26,9	4 400	1,06	MR ICI 80 - 24 × 200	90 LB			4		65
	26,5	4 470	1,32	MR ICI 81 - 19 × 200	90 LB		B5R	4		66
	26,9	4 400	1,18	MR ICI 81 - 24 × 200	90 LB			4		65
	27,6	4 290	1,18	MR ICI 80 - 24 × 200	90 LC	⇄ 70%		6		41,6
	27,6	4 290	1,4	MR ICI 81 - 24 × 200	90 LC	⇄ 70%		6		41,6
	28,6	4 140	2,65	MR ICI 100 - 24 × 200	90 LB			4		61,2
	31,4	3 850	2,65	MR CI 100 - 24 × 200	90 LC	⇄ 70%		6		36,6
	31,4	3 850	2,65	MR CI 100 - 28 × 250	112 MB			6		36,6
	33,7	3 520	1,5	MR ICI 80 - 24 × 200	90 LB			4		52
	33,7	3 520	1,7	MR ICI 81 - 24 × 200	90 LB			4		52
	34,5	3 430	1,6	MR ICI 80 - 24 × 200	90 LC	⇄ 70%		6		33,3
	34,5	3 430	1,8	MR ICI 81 - 24 × 200	90 LC	⇄ 70%		6		33,3
	35,4	3 420	1,18	MR CI 80 - 24 × 200	90 LC	⇄ 70%		6		32,5
	35,4	3 420	1,5	MR CI 81 - 24 × 200	90 LC	⇄ 70%		6		32,5
	35,4	3 420	1,18	MR CI 80 - 28 × 250	112 MB			6		32,5
	35,4	3 420	1,5	MR CI 81 - 28 × 250	112 MB			6		32,5
	35,8	3 310	3,55	MR ICI 100 - 24 × 200	90 LB			4		48,9
	38,2	3 170	3	MR CI 100 - 24 × 200	90 LC	⇄ 70%		6		30,1
	38.2	3 170	3	MR CI 100 - 28 × 250	112 MB			6		30.1

1) Powers valid for continuous duty S1; **increase possible** for duty cycles S2 ... S10 (see ch. 1 «General specifications»): in which case T_2 increases and fs decreases.
2) For complete designation when ordering see ch. 2.
* Mounting position **B5R** (see ch. 1.2).

13 - Bevel helical gearmotor selection tables

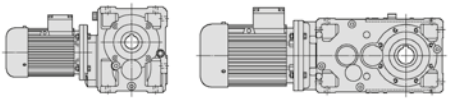

Motor power P_1 hp 1)	Output speed n_2 rpm	Output torque T_2 lb in	Service factor fs	2)					Gear ratio i
2	43,8	2 710	1,06	MR ICI 64 - 24 × 200	90 LB			4	40
	45,6	2 600	1,06	MR ICI 63 - 24 × 200	90 LC	S3 70%		6	25,2
	45,6	2 600	1,32	MR ICI 64 - 24 × 200	90 LC	S3 70%		6	25,2
	46	2 630	1,06	MR CI 64 - 24 × 200	90 LC	S3 70%		6	25
	42,1	2 820	1,8	MR ICI 80 - 24 × 200	90 LB			4	41,6
	42,1	2 820	2,12	MR ICI 81 - 24 × 200	90 LB			4	41,6
	43,8	2 710	2,24	MR ICI 80 - 24 × 200	90 LC	S3 70%		6	26,3
	43,8	2 710	2,5	MR ICI 81 - 24 × 200	90 LC	S3 70%		6	26,3
	44,2	2 740	1,9	MR CI 80 - 24 × 200	90 LC	S3 70%		6	26
	44,2	2 740	2,12	MR CI 81 - 24 × 200	90 LC	S3 70%		6	26
	44,2	2 740	1,9	MR CI 80 - 28 × 250	112 MB			6	26
	44,2	2 740	2,12	MR CI 81 - 28 × 250	112 MB			6	26
	43,9	2 700	4,25	MR ICI 100 - 24 × 200	90 LB			4	39,8
	47,8	2 530	4	MR CI 100 - 24 × 200	90 LB			4	36,6
	47,7	2 530	3,75	MR CI 100 - 24 × 200	90 LC	S3 70%		6	24,1
	47,7	2 530	3,75	MR CI 100 - 28 × 250	112 MB			6	24,1
	54,7	2 170	1,18	MR ICI 63 - 24 × 200	90 LB			4	32
	54,7	2 170	1,4	MR ICI 64 - 24 × 200	90 LB			4	32
	56	2 160	1,06	MR CI 64 - 24 × 200	90 LB			4	31,3
	57,5	2 100	1,12	MR CI 63 - 24 × 200	90 LC	S3 70%		6	20
	57,5	2 100	1,4	MR CI 64 - 24 × 200	90 LC	S3 70%		6	20
	52,5	2 260	2,36	MR ICI 80 - 24 × 200	90 LB			4	33,3
	52,5	2 260	2,65	MR ICI 81 - 24 × 200	90 LB			4	33,3
	53,8	2 250	1,8	MR CI 80 - 24 × 200	90 LB			4	32,5
	53,8	2 250	2,24	MR CI 81 - 24 × 200	90 LB			4	32,5
	55,3	2 190	2,36	MR CI 80 - 24 × 200	90 LC	S3 70%		6	20,8
	55,3	2 190	2,65	MR CI 81 - 24 × 200	90 LC	S3 70%		6	20,8
	55,3	2 190	2,36	MR CI 80 - 28 × 250	112 MB			6	20,8
	55,3	2 190	2,65	MR CI 81 - 28 × 250	112 MB			6	20,8
	58,1	2 080	4,5	MR CI 100 - 24 × 200	90 LB			4	30,1
	69,4	1 710	1,6	MR ICI 63 - 24 × 200	90 LB			4	25,2
	69,4	1 710	2	MR ICI 64 - 24 × 200	90 LB			4	25,2
	70	1 730	1,4	MR CI 63 - 24 × 200	90 LB			4	25
	70	1 730	1,6	MR CI 64 - 24 × 200	90 LB			4	25
	66,6	1 780	3,35	MR ICI 80 - 24 × 200	90 LB			4	26,3
	67,3	1 800	2,8	MR CI 80 - 24 × 200	90 LB			4	26
	67,3	1 800	3,15	MR CI 81 - 24 × 200	90 LB			4	26
	84,4	1 400	2	MR ICI 63 - 24 × 200	90 LB			4	20,7
	84,4	1 400	2,12	MR ICI 64 - 24 × 200	90 LB			4	20,7
	87,5	1 380	1,7	MR CI 63 - 24 × 200	90 LB			4	20
	87,5	1 380	2,12	MR CI 64 - 24 × 200	90 LB			4	20
	88,5	1 340	3,55	MR ICI 80 - 24 × 200	90 LB			4	19,8
	84,1	1 440	3,55	MR CI 80 - 24 × 200	90 LB			4	20,8
	109	1 110	2,12	MR CI 63 - 24 × 200	90 LB			4	16
	109	1 110	2,65	MR CI 64 - 24 × 200	90 LB			4	16
	139	870	3,15	MR CI 63 - 24 × 200	90 LB			4	12,6
	169	715	3,35	MR CI 63 - 24 × 200	90 LB			4	10,4
	219	550	3,35	MR CI 63 - 24 × 200	90 LB			4	7,98
	277	435	3,35	MR CI 63 - 24 × 200	90 LB			4	6,31
2,5	7,17	20 200	1,12	MR C3I 125 - 24 × 200	90 LB	S3 70%		4	244
	7,64	19 400	1,9	MR C2I 140 - 28 × 250	100 LB	S3 70%		6	151
	7,48	19 800	2,8	MR C2I 160 - 28 × 250	100 LB	S3 70%		6	154
	7,26	20 400	4	MR C2I 180 - 28 × 250	100 LB	S3 70%		6	158
	8,96	16 200	1,7	MR C3I 125 - 24 × 200	90 LB	S3 70%		4	195
	9,37	15 800	2,36	MR C2I 140 - 28 × 250	100 LB	S3 70%		6	123
	9,34	15 850	2,65	MR ICI 160 - 28 × 250	100 LB	S3 70%		6	123
	8,9	16 650	4	MR C2I 160 - 28 × 250	100 LB	S3 70%		6	129
	11,2	12 950	2	MR C3I 125 - 24 × 200	90 LB	S3 70%		4	156
	11,8	12 600	1,7	MR ICI 125 - 28 × 250	100 LB	S3 70%		6	97,7
	11,7	12 650	3	MR C2I 140 - 28 × 250	100 LB	S3 70%		6	98,2
	13,1	11 300	3,35	MR C2I 140 - 28 × 250	100 LB	S3 70%		6	87,8
	13,8	10 500	1,12	MR C3I 100 - 24 × 200	90 LB	S3 70%		4	127
	15,7	9 430	1,18	MR ICI 100 - 28 × 250	100 LB	S3 70%		6	73,2
	14,2	10 200	3	MR C3I 125 - 24 × 200	90 LB	S3 70%		4	123
	14,5	10 200	2	MR ICI 125 - 24 × 200	90 LB	S3 70%		4	121
	14,7	10 050	2,65	MR ICI 140 - 28 × 250	100 LB	S3 70%		6	78,1
	14,6	10 100	4,25	MR C2I 140 - 28 × 250	100 LB	S3 70%		6	78,6

Motor power P_1 hp 1)	Output speed n_2 rpm	Output torque T_2 lb in	Service factor fs	2)					Gear ratio i
2,5	16,4	9 040	4,25	MR C2I 140 - 28 × 250	100 LB	S3 70%		6	70,2
	17,5	8 280	1,9	MR C3I 100 - 24 × 200	90 LB	S3 70%		4	99,9
	19,1	7 750	1,4	MR ICI 100 - 19 × 200	90 LB	S3 70%	B5R	4	91,5
	18,8	7 860	1,4	MR ICI 100 - 24 × 200	90 LB	S3 70%		4	92,9
	18,1	8 160	2,8	MR ICI 125 - 24 × 200	90 LB	S3 70%		4	96,4
	18,1	8 160	3,15	MR ICI 140 - 24 × 200	90 LB	S3 70%		4	96,4
	22,8	6 490	1,7	MR ICI 100 - 19 × 200	90 LB	S3 70%	B5R	4	76,7
	22,9	6 470	1,5	MR ICI 100 - 24 × 200	90 LB	S3 70%		4	76,4
	23,9	6 210	1,8	MR ICI 100 - 28 × 250	100 LB	S3 70%		6	48,2
	22,4	6 610	3,35	MR ICI 125 - 24 × 200	90 LB	S3 70%		4	78,1
	26,5	5 590	1,06	MR ICI 81 - 19 × 200	90 LB	S3 70%	B5R	4	66
	28,6	5 180	2,12	MR ICI 100 - 24 × 200	90 LB	S3 70%		4	61,2
	31,4	4 810	2,12	MR CI 100 - 28 × 250	100 LB	S3 70%		6	36,6
	28	5 290	4,5	MR ICI 125 - 24 × 200	90 LB	S3 70%		4	62,5
	33,7	4 400	1,18	MR ICI 80 - 24 × 200	90 LB	S3 70%		4	52
	33,7	4 400	1,32	MR ICI 81 - 24 × 200	90 LB	S3 70%		4	52
	35,4	4 270	1,18	MR CI 81 - 28 × 250	100 LB	S3 70%		6	32,5
	35,8	4 140	3	MR ICI 100 - 24 × 200	90 LB	S3 70%		4	48,9
	38,2	3 960	2,36	MR CI 100 - 28 × 250	100 LB	S3 70%		6	30,1
	42,1	3 520	1,4	MR ICI 80 - 24 × 200	90 LB	S3 70%		4	41,6
	42,1	3 520	1,7	MR ICI 81 - 24 × 200	90 LB	S3 70%		4	41,6
	44,2	3 420	1,5	MR CI 80 - 28 × 250	100 LB	S3 70%		6	26
	44,2	3 420	1,7	MR CI 81 - 28 × 250	100 LB	S3 70%		6	26
	43,9	3 370	3,35	MR ICI 100 - 24 × 200	90 LB	S3 70%		4	39,8
	47,8	3 160	3,15	MR CI 100 - 24 × 200	90 LB	S3 70%		4	36,6
	47,7	3 170	3	MR CI 100 - 28 × 250	100 LB	S3 70%		6	24,1
	54,6	2 710	1	MR ICI 63 - 19 × 200	90 LB	S3 70%	B5R	4	32
	54,6	2 710	1,25	MR ICI 64 - 19 × 200	90 LB	S3 70%	B5R	4	32
	54,7	2 710	1,12	MR ICI 64 - 24 × 200	90 LB	S3 70%		4	32
	52,5	2 820	1,9	MR ICI 80 - 24 × 200	90 LB	S3 70%		4	33,3
	52,5	2 820	2,12	MR ICI 81 - 24 × 200	90 LB	S3 70%		4	33,3
	53,8	2 810	1,5	MR CI 80 - 24 × 200	90 LB	S3 70%		4	32,5
	53,8	2 810	1,8	MR CI 81 - 24 × 200	90 LB	S3 70%		4	32,5
	55,3	2 740	1,9	MR CI 80 - 28 × 250	100 LB	S3 70%		6	20,8
	55,3	2 740	2,12	MR CI 81 - 28 × 250	100 LB	S3 70%		6	20,8
	58,1	2 600	3,55	MR CI 100 - 24 × 200	90 LB	S3 70%		4	30,1
	69,4	2 140	1,32	MR ICI 63 - 24 × 200	90 LB	S3 70%		4	25,2
	69,4	2 140	1,6	MR ICI 64 - 24 × 200	90 LB	S3 70%		4	25,2
	70	2 160	1,12	MR CI 63 - 24 × 200	90 LB	S3 70%		4	25
	70	2 160	1,32	MR CI 64 - 24 × 200	90 LB	S3 70%		4	25
	66,6	2 220	2,65	MR ICI 80 - 24 × 200	90 LB	S3 70%		4	26,3
	66,6	2 220	3	MR ICI 81 - 24 × 200	90 LB	S3 70%		4	26,3
	67,3	2 250	2,24	MR CI 80 - 24 × 200	90 LB	S3 70%		4	26
	67,3	2 250	2,5	MR CI 81 - 24 × 200	90 LB	S3 70%		4	26
	72,6	2 080	4,5	MR CI 100 - 24 × 200	90 LB	S3 70%		4	24,1
	84,4	1 750	1,6	MR ICI 63 - 24 × 200	90 LB	S3 70%		4	20,7
	84,4	1 750	1,7	MR ICI 64 - 24 × 200	90 LB	S3 70%		4	20,7
	87,5	1 730	1,32	MR CI 63 - 24 × 200	90 LB	S3 70%		4	20
	87,5	1 730	1,7	MR CI 64 - 24 × 200	90 LB	S3 70%		4	20
	88,5	1 670	2,8	MR ICI 80 - 24 × 200	90 LB	S3 70%		4	19,8
	84,1	1 800	2,8	MR CI 80 - 24 × 200	90 LB	S3 70%		4	20,8
	84,1	1 800	3,15	MR CI 81 - 24 × 200	90 LB	S3 70%		4	20,8
	109	1 380	1,7	MR CI 63 - 24 × 200	90 LB	S3 70%		4	16
	109	1 380	2,12	MR CI 64 - 24 × 200	90 LB	S3 70%		4	16
	105	1 440	3,55	MR CI 80 - 24 × 200	90 LB	S3 70%		4	16,7
	139	1 090	2,5	MR CI 63 - 24 × 200	90 LB	S3 70%		4	12,6
	139	1 090	3	MR CI 64 - 24 × 200	90 LB	S3 70%		4	12,6
	169	895	2,65	MR CI 63 - 24 × 200	90 LB	S3 70%		4	10,4
	169	895	3	MR CI 64 - 24 × 200	90 LB	S3 70%		4	10,4
	219	690	2,65	MR CI 63 - 24 × 200	90 LB	S3 70%		4	7,98
	219	690	3	MR CI 64 - 24 × 200	90 LB	S3 70%		4	7,98
	277	545	2,65	MR CI 63 - 24 × 200	90 LB	S3 70%		4	6,31
	277	545	3	MR CI 64 - 24 × 200	90 LB	S3 70%		4	6,31
3	7,64	23 250	1,6	MR C2I 140 - 28 × 250	132 S		B5R	6	151
	7,48	23 800	2,36	MR C2I 160 - 28 × 250	132 S		B5R	6	154
	7,26	24 500	3,35	MR C2I 180 - 28 × 250	132 S		B5R	6	158

1) Powers valid for continuous duty S1; **increase possible** for duty cycles S2 ... S10 (see ch. 1 «General specifications»): in which case T_2 increases and fs decreases.
2) For complete designation when ordering see ch. 2.
* Mounting position **B5R** (see ch. 1.2).

13 - Bevel helical gearmotor selection tables

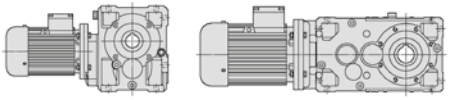

Motor power P_1 hp 1)	Output speed n_2 rpm	Output torque T_2 lb in	Service factor fs	2)	Gear ratio i
3	8,96	19 400	1,4	MR C3I 125 - 24 × 200 90 LC ⊠ 70%	4	195
	8,83	19 700	1,18	MR C3I 125 - 28 × 250 112 MA	4	198
	9,07	19 200	1,25	MR C3I 125 - 28 × 250 132 S B5R	6	127
	9,37	18 950	2	MR C2I 140 - 28 × 250 132 S B5R	6	123
	9,34	19 000	2,12	MR ICI 160 - 28 × 250 132 S B5R	6	123
	8,9	19 950	3,35	MR C2I 160 - 28 × 250 132 S B5R	6	129
	11,2	15 550	1,7	MR C3I 125 - 24 × 200 90 LC ⊠ 70%	4	156
	11	15 750	1,7	MR C3I 125 - 28 × 250 112 MA	4	158
	11,8	15 100	1,4	MR ICI 125 - 28 × 250 132 S B5R	6	97,7
	11,6	15 300	2,24	MR C2I 140 - 28 × 250 112 MA	4	151
	11,7	15 200	2,5	MR C2I 140 - 28 × 250 132 S B5R	6	98,2
	11,7	15 200	3,15	MR ICI 160 - 28 × 250 132 S B5R	6	98,5
	11,4	15 600	3,35	MR C2I 160 - 28 × 250 112 MA	4	154
	14,2	12 250	2,5	MR C3I 125 - 24 × 200 90 LC ⊠ 70%	4	123
	13,8	12 600	1,9	MR C3I 125 - 28 × 250 112 MA	4	127
	14,5	12 250	1,7	MR ICI 125 - 24 × 200 90 LC ⊠ 70%	4	121
	14,7	12 050	1,9	MR ICI 125 - 28 × 250 132 S B5R	6	78,1
	14,7	12 050	2,24	MR ICI 140 - 28 × 250 132 S B5R	6	78,1
	14,3	12 450	3	MR C2I 140 - 28 × 250 112 MA	4	123
	14,2	12 500	3,15	MR ICI 160 - 28 × 250 112 MA	4	123
	17,5	9 930	1,6	MR C3I 100 - 24 × 200 90 LC ⊠ 70%	4	99,9
	19,1	9 300	1,18	MR ICI 100 - 19 × 200 90 LC ⊠ 70% B5R	4	91,5
	18,8	9 440	1,18	MR ICI 100 - 24 × 200 90 LC ⊠ 70%	4	92,9
	17,5	9 940	3,15	MR C3I 125 - 28 × 250 112 MA	4	100
	18,1	9 790	2,36	MR ICI 125 - 24 × 200 90 LC ⊠ 70%	4	96,4
	17,9	9 920	2,12	MR ICI 125 - 28 × 250 112 MA	4	97,7
	18,1	9 790	2,65	MR ICI 140 - 24 × 200 90 LC ⊠ 70%	4	96,4
	17,8	9 970	3,75	MR C2I 140 - 28 × 250 112 MA	4	98,2
	17,8	10 000	4,75	MR ICI 160 - 28 × 250 112 MA	4	98,5
	19,9	8 910	4,25	MR C2I 140 - 28 × 250 112 MA	4	87,8
	22,8	7 780	1,4	MR ICI 100 - 19 × 200 90 LC ⊠ 70% B5R	4	76,7
	22,9	7 760	1,25	MR ICI 100 - 24 × 200 90 LC ⊠ 70%	4	76,4
	23,9	7 440	1,5	MR ICI 100 - 28 × 250 112 MA	4	73,2
	23,9	7 450	1,5	MR ICI 100 - 28 × 250 132 S B5R	6	48,2
	22,4	7 930	2,8	MR ICI 125 - 28 × 250 112 MA	4	78,1
	22,4	7 930	3,15	MR ICI 140 - 28 × 250 112 MA	4	78,1
	22,3	7 980	5	MR C2I 140 - 28 × 250 112 MA	4	78,6
	24,9	7 130	5,3	MR C2I 140 - 28 × 250 112 MA	4	70,2
	28,6	6 210	1,8	MR ICI 100 - 24 × 200 90 LC ⊠ 70%	4	61,2
	29,1	6 120	1,5	MR ICI 100 - 28 × 250 112 MA	4	60,2
	29,8	5 960	2	MR ICI 100 - 28 × 250 132 S B5R	6	38,5
	31,4	5 780	1,8	MR CI 100 - 28 × 250 132 S B5R	6	36,6
	27,6	6 440	3,55	MR ICI 125 - 28 × 250 112 MA	4	63,4
	28,2	6 290	5,6	MR C2I 140 - 28 × 250 112 MA	4	62
	31,6	5 620	6,7	MR C2I 140 - 28 × 250 112 MA	4	55,4
	33,7	5 280	0,95	MR ICI 80 - 24 × 200 90 LC ⊠ 70%	4	52
	33,7	5 280	1,12	MR ICI 81 - 24 × 200 90 LC ⊠ 70%	4	52
	35,8	4 970	2,36	MR ICI 100 - 24 × 200 90 LC ⊠ 70%	4	48,9
	36,3	4 890	2,24	MR ICI 100 - 28 × 250 112 MA	4	48,2
	38,2	4 750	2	MR CI 100 - 28 × 250 132 S B5R	6	30,1
	34,5	5 150	4,5	MR ICI 125 - 28 × 250 112 MA	4	50,7
	34,7	5 120	7,1	MR C2I 140 - 28 × 250 112 MA	4	50,4
	42,1	4 220	1,18	MR ICI 80 - 24 × 200 90 LC ⊠ 70%	4	41,6
	42,1	4 220	1,4	MR ICI 81 - 24 × 200 90 LC ⊠ 70%	4	41,6
	44,2	4 100	1,25	MR CI 80 - 28 × 250 132 S B5R	6	26
	44,2	4 100	1,4	MR CI 81 - 28 × 250 132 S B5R	6	26
	43,9	4 050	2,8	MR ICI 100 - 24 × 200 90 LC ⊠ 70%	4	39,8
	45,4	3 910	3	MR ICI 100 - 28 × 250 112 MA	4	38,5
	47,8	3 800	2,65	MR CI 100 - 24 × 200 90 LC ⊠ 70%	4	36,6
	47,8	3 800	2,65	MR CI 100 - 28 × 250 112 MA	4	36,6
	47,7	3 800	2,5	MR CI 100 - 28 × 250 132 S B5R	6	24,1

Motor power P_1 hp 1)	Output speed n_2 rpm	Output torque T_2 lb in	Service factor fs	2)	Gear ratio i
3	54,6	3 250	1,06	MR ICI 64 - 19 × 200 90 LC ⊠ 70% B5R	4	32
	52,5	3 390	1,6	MR ICI 80 - 24 × 200 90 LC ⊠ 70%	4	33,3
	52,5	3 390	1,8	MR ICI 81 - 24 × 200 90 LC ⊠ 70%	4	33,3
	53,8	3 370	1,18	MR CI 80 - 24 × 200 90 LC ⊠ 70%	4	32,5
	53,8	3 370	1,5	MR CI 81 - 24 × 200 90 LC ⊠ 70%	4	32,5
	53,8	3 370	1,18	MR CI 80 - 28 × 250 112 MA	4	32,5
	53,8	3 370	1,5	MR CI 81 - 28 × 250 112 MA	4	32,5
	55,3	3 280	1,5	MR CI 80 - 28 × 250 132 S B5R	6	20,8
	55,3	3 280	1,8	MR CI 81 - 28 × 250 132 S B5R	6	20,8
	55,7	3 190	4,25	MR ICI 100 - 24 × 200 90 LC ⊠ 70%	4	31,4
	55,8	3 190	3,55	MR ICI 100 - 28 × 250 112 MA	4	31,4
	58,1	3 120	3	MR CI 100 - 24 × 200 90 LC ⊠ 70%	4	30,1
	58,1	3 120	3	MR CI 100 - 28 × 250 112 MA	4	30,1
	69,4	2 560	1,06	MR ICI 63 - 24 × 200 90 LC ⊠ 70%	4	25,2
	69,4	2 560	1,32	MR ICI 64 - 24 × 200 90 LC ⊠ 70%	4	25,2
	70	2 590	1,06	MR CI 64 - 24 × 200 90 LC ⊠ 70%	4	25
	66,6	2 670	2,24	MR ICI 80 - 24 × 200 90 LC ⊠ 70%	4	26,3
	66,6	2 670	2,5	MR ICI 81 - 24 × 200 90 LC ⊠ 70%	4	26,3
	67,3	2 700	1,9	MR CI 80 - 24 × 200 90 LC ⊠ 70%	4	26
	67,3	2 700	2,12	MR CI 81 - 24 × 200 90 LC ⊠ 70%	4	26
	67,3	2 700	1,9	MR CI 80 - 28 × 250 112 MA	4	26
	67,3	2 700	2,12	MR CI 81 - 28 × 250 112 MA	4	26
	70,7	2 510	5,3	MR ICI 100 - 28 × 250 112 MA	4	24,7
	84,4	2 100	1,32	MR ICI 63 - 24 × 200 90 LC ⊠ 70%	4	20,7
	84,4	2 100	1,5	MR ICI 64 - 24 × 200 90 LC ⊠ 70%	4	20,7
	87,5	2 070	1,12	MR CI 63 - 24 × 200 90 LC ⊠ 70%	4	20
	87,5	2 070	1,4	MR CI 64 - 24 × 200 90 LC ⊠ 70%	4	20
	88,5	2 010	2,36	MR ICI 80 - 24 × 200 90 LC ⊠ 70%	4	19,8
	88,5	2 010	2,8	MR ICI 81 - 24 × 200 90 LC ⊠ 70%	4	19,8
	84,1	2 160	2,36	MR CI 80 - 24 × 200 90 LC ⊠ 70%	4	20,8
	84,1	2 160	2,65	MR CI 81 - 24 × 200 90 LC ⊠ 70%	4	20,8
	84,1	2 160	2,36	MR CI 80 - 28 × 250 112 MA	4	20,8
	84,1	2 160	2,65	MR CI 81 - 28 × 250 112 MA	4	20,8
	84,9	2 090	5,3	MR ICI 100 - 28 × 250 112 MA	4	20,6
	109	1 660	1,4	MR CI 63 - 24 × 200 90 LC ⊠ 70%	4	16
	109	1 660	1,8	MR CI 64 - 24 × 200 90 LC ⊠ 70%	4	16
	105	1 730	3	MR CI 80 - 24 × 200 90 LC ⊠ 70%	4	16,7
	105	1 730	3	MR CI 80 - 28 × 250 112 MA	4	16,7
	105	1 730	3,35	MR CI 81 - 28 × 250 112 MA	4	16,7
	139	1 310	2,12	MR CI 63 - 24 × 200 90 LC ⊠ 70%	4	12,6
	139	1 310	2,5	MR CI 64 - 24 × 200 90 LC ⊠ 70%	4	12,6
	133	1 360	4,25	MR CI 80 - 28 × 250 112 MA	4	13,1
	169	1 070	2,24	MR CI 63 - 24 × 200 90 LC ⊠ 70%	4	10,4
	169	1 070	2,5	MR CI 64 - 24 × 200 90 LC ⊠ 70%	4	10,4
	177	1 020	4,5	MR CI 80 - 28 × 250 112 MA	4	9,88
	219	825	2,24	MR CI 63 - 24 × 200 90 LC ⊠ 70%	4	7,98
	219	825	2,5	MR CI 64 - 24 × 200 90 LC ⊠ 70%	4	7,98
	227	800	4,5	MR CI 80 - 28 × 250 112 MA	4	7,71
	277	655	2,24	MR CI 63 - 24 × 200 90 LC ⊠ 70%	4	6,31
	277	655	2,5	MR CI 64 - 24 × 200 90 LC ⊠ 70%	4	6,31
	284	640	4,5	MR CI 80 - 28 × 250 112 MA	4	6,16
4	7,64	31 050	1,18	MR C2I 140 - 28 × 250 112 MC ⊠ 70%	6	151
	7,64	31 050	1,18	MR C2I 140 - 38 × 300 132 M	6	151
	7,48	31 700	1,8	MR C2I 160 - 28 × 250 112 MC ⊠ 70%	6	154
	7,48	31 700	1,8	MR C2I 160 - 38 × 300 132 M	6	154
	7,26	32 650	2,5	MR C2I 180 - 28 × 250 112 MC ⊠ 70%	6	158
	7,26	32 650	2,5	MR C2I 180 - 38 × 300 132 M	6	158
	7,59	31 200	3,75	MR C2I 200 - 38 × 300 132 M	6	151
	9,37	25 300	1,5	MR C2I 140 - 28 × 250 112 MC ⊠ 70%	6	123
	9,37	25 300	1,5	MR C2I 140 - 38 × 300 132 M	6	123
	9,34	25 350	1,6	MR ICI 160 - 28 × 250 112 MC ⊠ 70%	6	123
	8,9	26 600	2,5	MR C2I 160 - 28 × 250 112 MC ⊠ 70%	6	129
	8,9	26 600	2,5	MR C2I 160 - 38 × 300 132 M	6	129
	8,86	26 750	3,15	MR C2I 180 - 28 × 250 112 MC ⊠ 70%	6	130
	8,86	26 750	3,15	MR C2I 180 - 38 × 300 132 M	6	130
	9,84	24 100	3,55	MR ICI 200 - 38 × 300 132 M	6	117

1) Powers valid for continuous duty S1; **increase possible** for duty cycles S2 ... S10 (see ch. 1 «General specifications»): in which case T_2 increases and fs decreases.
2) For complete designation when ordering see ch. 2.
* Mounting position **B5R** (see ch. 1.2).

13 - Bevel helical gearmotor selection tables

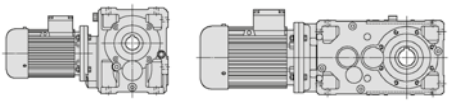

Motor power P_1 hp 1)	Output speed n_2 rpm	Output torque T_2 lb in	Service factor fs	2)	Gear ratio i
4	11	21 000	1,25	MR C3I 125 - 28 × 250 112 M 4	158
	11,6	20 400	1,7	MR C2I 140 - 28 × 250 112 M 4	151
	11,7	20 250	1,9	MR C2I 140 - 28 × 250 112 MC S3 70% 6	98,2
	11,7	20 250	1,9	MR C2I 140 - 38 × 300 132 M 6	98,2
	11,7	20 300	2,5	MR ICI 160 - 28 × 250 112 MC S3 70% 6	98,5
	11,4	20 850	2,5	MR C2I 160 - 28 × 250 112 M 4	154
	11,1	21 300	3,15	MR C2I 160 - 28 × 250 112 MC S3 70% 6	103
	11,1	21 300	3,15	MR C2I 160 - 38 × 300 132 M 6	103
	11,3	20 900	2,5	MR ICI 180 - 28 × 250 112 MC S3 70% 6	101
	11	21 450	3,55	MR C2I 180 - 28 × 250 112 M 4	158
	12,3	19 300	5,3	MR ICI 200 - 38 × 300 132 M 6	93,5
	13,8	16 800	1,4	MR C3I 125 - 28 × 250 112 M 4	127
	14,5	16 300	1,32	MR ICI 125 - 24 × 200 112 M B5R 4	121
	14,7	16 100	1,4	MR ICI 125 - 28 × 250 112 MC S3 70% 6	78,1
	14,7	16 100	1,7	MR ICI 140 - 28 × 250 112 MC S3 70% 6	78,1
	14,3	16 600	2,24	MR C2I 140 - 28 × 250 112 M 4	123
	14,2	16 650	2,36	MR ICI 160 - 28 × 250 112 M 4	123
	14,7	16 100	3	MR ICI 160 - 28 × 250 112 MC S3 70% 6	78,1
	13,5	17 500	3,55	MR C2I 160 - 28 × 250 112 M 4	129
	14,7	16 100	6,3	MR ICI 200 - 38 × 300 132 M 6	78,1
	17,5	13 250	2,36	MR C3I 125 - 28 × 250 112 M 4	100
	18,1	13 050	1,7	MR ICI 125 - 24 × 200 112 M B5R 4	96,4
	17,9	13 200	1,6	MR ICI 125 - 28 × 250 112 M 4	97,7
	18,1	13 050	1,7	MR ICI 125 - 28 × 250 112 MC S3 70% 6	63,4
	18,1	13 050	1,6	MR ICI 125 - 38 × 300 132 M 6	63,4
	18,1	13 050	2	MR ICI 140 - 24 × 200 112 M B5R 4	96,4
	18,1	13 050	2	MR ICI 140 - 28 × 250 112 MC S3 70% 6	63,4
	17,8	13 300	2,8	MR C2I 140 - 28 × 250 112 M 4	98,2
	17,8	13 350	3,55	MR ICI 160 - 28 × 250 112 M 4	98,5
	19,9	11 900	3,15	MR C2I 140 - 28 × 250 112 M 4	87,8
	23,9	9 930	1,12	MR ICI 100 - 28 × 250 112 MC S3 70% 6	48,2
	22,4	10 600	2,12	MR ICI 125 - 28 × 250 112 M 4	78,1
	22,4	10 600	2,36	MR ICI 140 - 28 × 250 112 M 4	78,1
	22,7	10 450	3,15	MR ICI 140 - 28 × 250 112 MC S3 70% 6	50,7
	22,7	10 450	2,5	MR ICI 140 - 38 × 300 132 M 6	50,8
	22,3	10 650	3,75	MR C2I 140 - 28 × 250 112 M 4	78,6
	22,4	10 600	4,5	MR ICI 160 - 28 × 250 112 M 4	78,1
	24,9	9 510	4	MR C2I 140 - 28 × 250 112 M 4	70,2
	28,6	8 280	1,32	MR ICI 100 - 24 × 200 112 M B5R 4	61,2
	29,1	8 160	1,18	MR ICI 100 - 28 × 250 112 M 4	60,2
	29,8	7 940	1,5	MR ICI 100 - 28 × 250 112 MC S3 70% 6	38,5
	31,4	7 700	1,32	MR CI 100 - 28 × 250 112 MC S3 70% 6	36,6
	27,6	8 580	2,65	MR ICI 125 - 28 × 250 112 M 4	63,4
	28,2	8 390	4,25	MR C2I 140 - 28 × 250 112 M 4	62
	31,6	7 500	5	MR C2I 140 - 28 × 250 112 M 4	55,4
	36,3	6 520	1,7	MR ICI 100 - 28 × 250 112 M 4	48,2
	38,2	6 340	1,5	MR CI 100 - 28 × 250 112 MC S3 70% 6	30,1
	38,2	6 340	1,5	MR CI 100 - 38 × 300 132 M 6	30,1
	34,5	6 870	3,35	MR ICI 125 - 28 × 250 112 M 4	50,7
	36,8	6 580	2,8	MR CI 125 - 38 × 300 132 M 6	31,3
	34,7	6 830	5,3	MR C2I 140 - 28 × 250 112 M 4	50,4
	42,1	5 630	1,06	MR ICI 81 - 24 × 200 112 M B5R 4	41,6
	44,2	5 470	1,06	MR CI 81 - 28 × 250 112 MC S3 70% 6	26
	45,4	5 220	2,24	MR ICI 100 - 28 × 250 112 M 4	38,5
	47,8	5 060	2	MR CI 100 - 28 × 250 112 M 4	36,6
	47,7	5 070	1,9	MR CI 100 - 28 × 250 112 MC S3 70% 6	24,1
	47,7	5 070	1,9	MR CI 100 - 38 × 300 132 M 6	24,1
	43,1	5 490	4,5	MR ICI 125 - 28 × 250 112 M 4	40,6
	46	5 260	4,25	MR CI 125 - 38 × 300 132 M 6	25

Motor power P_1 hp 1)	Output speed n_2 rpm	Output torque T_2 lb in	Service factor fs	2)	Gear ratio i
4	52,5	4 510	1,18	MR ICI 80 - 24 × 200 112 M B5R 4	33,3
	52,5	4 510	1,32	MR ICI 81 - 24 × 200 112 M B5R 4	33,3
	53,8	4 490	1,12	MR CI 81 - 28 × 250 112 M 4	32,5
	55,3	4 380	1,18	MR CI 80 - 28 × 250 112 MC S3 70% 6	20,8
	55,3	4 380	1,32	MR CI 81 - 28 × 250 112 MC S3 70% 6	20,8
	55,8	4 250	2,65	MR ICI 100 - 28 × 250 112 M 4	31,4
	58,1	4 160	2,24	MR CI 100 - 28 × 250 112 M 4	30,1
	59,7	4 060	3	MR CI 100 - 28 × 250 112 MC S3 70% 6	19,3
	59,7	4 060	3	MR CI 100 - 38 × 300 132 M 6	19,3
	57,5	4 210	5,3	MR CI 125 - 38 × 300 132 M 6	20
	66,6	3 560	1,6	MR ICI 80 - 24 × 200 112 M B5R 4	26,3
	66,6	3 560	1,9	MR ICI 81 - 24 × 200 112 M B5R 4	26,3
	67,3	3 600	1,4	MR CI 80 - 28 × 250 112 M 4	26
	67,3	3 600	1,6	MR CI 81 - 28 × 250 112 M 4	26
	70,7	3 350	4	MR ICI 100 - 28 × 250 112 M 4	24,7
	72,6	3 330	2,8	MR CI 100 - 28 × 250 112 M 4	24,1
	87,5	2 770	1,06	MR CI 64 - 24 × 200 112 M B5R 4	20
	88,5	2 680	1,8	MR ICI 80 - 24 × 200 112 M B5R 4	19,8
	88,5	2 680	2,12	MR ICI 81 - 24 × 200 112 M B5R 4	19,8
	84,1	2 880	1,7	MR CI 80 - 28 × 250 112 M 4	20,8
	84,1	2 880	2	MR CI 81 - 28 × 250 112 M 4	20,8
	84,9	2 790	4	MR ICI 100 - 28 × 250 112 M 4	20,6
	90,8	2 670	4	MR CI 100 - 28 × 250 112 M 4	19,3
	109	2 210	1,32	MR CI 64 - 24 × 200 112 M B5R 4	16
	105	2 300	2,24	MR CI 80 - 28 × 250 112 M 4	16,7
	105	2 300	2,5	MR CI 81 - 28 × 250 112 M 4	16,7
	112	2 170	4,5	MR CI 100 - 28 × 250 112 M 4	15,7
	139	1 740	1,9	MR CI 64 - 24 × 200 112 M B5R 4	12,6
	133	1 820	3,15	MR CI 80 - 28 × 250 112 M 4	13,1
	141	1 710	6,7	MR CI 100 - 28 × 250 112 M 4	12,4
	169	1 430	1,9	MR CI 64 - 24 × 200 112 M B5R 4	10,4
	177	1 370	3,35	MR CI 80 - 28 × 250 112 M 4	9,88
	219	1 100	1,9	MR CI 64 - 24 × 200 112 M B5R 4	7,98
	227	1 070	3,35	MR CI 80 - 28 × 250 112 M 4	7,71
	277	870	1,9	MR CI 64 - 24 × 200 112 M B5R 4	6,31
	284	850	3,35	MR CI 80 - 28 × 250 112 M 4	6,16
5,4	7,48	42 800	1,32	MR C2I 160 - 38 × 300 132 MB 6	154
	7,26	44 100	1,9	MR C2I 180 - 38 × 300 132 MB 6	158
	7,59	42 150	2,8	MR C2I 200 - 38 × 300 132 MB 6	151
	7,37	43 400	3,75	MR C2I 225 - 38 × 300 132 MB 6	156
	8,9	35 950	1,9	MR C2I 160 - 38 × 300 132 MB 6	129
	8,86	36 100	2,24	MR C2I 180 - 38 × 300 132 MB 6	130
	9,84	32 550	2,5	MR ICI 200 - 38 × 300 132 MB 6	117
	9,04	35 400	3,75	MR C2I 200 - 38 × 300 132 MB 6	127
	11,6	27 550	1,25	MR C2I 140 - 28 × 250 112 MB 4	151
	11,7	27 300	1,4	MR C2I 140 - 38 × 300 132 MB 6	98,2
	11,4	28 100	1,9	MR C2I 160 - 28 × 250 112 MB 4	154
	11	28 950	2,65	MR C2I 180 - 28 × 250 112 MB 4	158
	12,3	26 000	3,75	MR ICI 200 - 38 × 300 132 MB 6	93,5
	13,8	22 700	1,06	MR C3I 125 - 28 × 250 112 MB 4	127
	14,3	22 450	1,6	MR C2I 140 - 28 × 250 112 MB 4	123
	14,2	22 500	1,8	MR ICI 160 - 28 × 250 112 MB 4	123
	13,5	23 600	2,65	MR C2I 160 - 28 × 250 112 MB 4	129
	14,7	21 750	4,5	MR ICI 200 - 38 × 300 132 MB 6	78,1
	17,5	17 900	1,7	MR C3I 125 - 28 × 250 112 MB 4	100
	18,1	17 650	1,25	MR ICI 125 - 24 × 200 112 MB B5R 4	96,4
	17,9	17 850	1,18	MR ICI 125 - 28 × 250 112 MB 4	97,7
	18,1	17 650	1,5	MR ICI 140 - 24 × 200 112 MB B5R 4	96,4
	17,8	17 950	2,12	MR C2I 140 - 28 × 250 112 MB 4	98,2
	17,8	18 000	2,65	MR ICI 160 - 28 × 250 112 MB 4	98,5
	16,9	18 900	3,35	MR C2I 160 - 28 × 250 112 MB 4	103
	17,3	18 550	2,8	MR ICI 180 - 28 × 250 112 MB 4	101
	19,9	16 050	2,36	MR C2I 140 - 28 × 250 112 MB 4	87,8
	19,4	16 500	4	MR C2I 160 - 28 × 250 112 MB 4	90,4

1) Powers valid for continuous duty S1; **increase possible** for duty cycles S2 ... S10 (see ch. 1 «General specifications»): in which case T_2 increases and fs decreases.
2) For complete designation when ordering see ch. 2.
* Mounting position **B5R** (see ch. 1.2).

13 - Bevel helical gearmotor selection tables

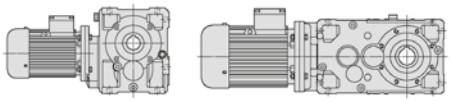

Motor power P_1 hp 1)	Output speed n_2 rpm	Output torque T_2 lb in	Service factor fs	2)	Gear ratio i
5,4	22,4	14 300	1,6	MR ICI 125 - 28 × 250 112 MB	4 78,1
	22,4	14 300	1,8	MR ICI 140 - 28 × 250 112 MB	4 78,1
	22,7	14 100	1,8	MR ICI 140 - 38 × 300 132 MB	6 50,8
	22,3	14 350	2,8	MR C2I 140 - 28 × 250 112 MB	4 78,6
	22,4	14 300	3,35	MR ICI 160 - 28 × 250 112 MB	4 78,1
	24,9	12 850	3	MR C2I 140 - 28 × 250 112 MB	4 70,2
	28,6	11 200	0,95	MR ICI 100 - 24 × 200 112 MB RSR	4 61,2
	27,6	11 600	1,9	MR ICI 125 - 28 × 250 112 MB	4 63,4
	27,6	11 600	2,12	MR ICI 140 - 28 × 250 112 MB	4 63,4
	28,2	11 350	3,15	MR C2I 140 - 28 × 250 112 MB	4 62
	28	11 450	4,5	MR ICI 160 - 28 × 250 112 MB	4 62,5
	31,6	10 100	3,75	MR C2I 140 - 28 × 250 112 MB	4 55,4
	36,3	8 810	1,25	MR ICI 100 - 28 × 250 112 MB	4 48,2
	34,5	9 270	2,5	MR ICI 125 - 28 × 250 112 MB	4 50,7
	36,8	8 880	2	MR CI 125 - 38 × 300 132 MB	6 31,3
	34,5	9 270	3,35	MR ICI 140 - 28 × 250 112 MB	4 50,7
	34,7	9 220	4	MR C2I 140 - 28 × 250 112 MB	4 50,4
	45,4	7 050	1,7	MR ICI 100 - 28 × 250 112 MB	4 38,5
	47,8	6 830	1,5	MR CI 100 - 28 × 250 112 MB	4 36,6
	47,7	6 840	1,4	MR CI 100 - 38 × 300 132 MB	6 24,1
	43,1	7 420	3,35	MR ICI 125 - 28 × 250 112 MB	4 40,6
	46	7 100	3,15	MR CI 125 - 38 × 300 132 MB	6 25
	55,8	5 740	2	MR ICI 100 - 28 × 250 112 MB	4 31,4
	58,1	5 620	1,6	MR CI 100 - 28 × 250 112 MB	4 30,1
	59,7	5 480	2,12	MR CI 100 - 38 × 300 132 MB	6 19,3
	54,7	5 850	4,25	MR ICI 125 - 28 × 250 112 MB	4 32
	57,5	5 680	4	MR CI 125 - 38 × 300 132 MB	6 20
	67,3	4 850	1,06	MR CI 80 - 28 × 250 112 MB	4 26
	67,3	4 850	1,18	MR CI 81 - 28 × 250 112 MB	4 26
	70,7	4 520	3	MR ICI 100 - 28 × 250 112 MB	4 24,7
	72,6	4 500	2,12	MR CI 100 - 28 × 250 112 MB	4 24,1
	66,6	4 800	5	MR ICI 125 - 28 × 250 112 MB	4 26,3
	71,9	4 550	5	MR CI 125 - 38 × 300 132 MB	6 16
	84,1	3 880	1,32	MR CI 80 - 28 × 250 112 MB	4 20,8
	84,1	3 880	1,5	MR CI 81 - 28 × 250 112 MB	4 20,8
	84,9	3 770	3	MR ICI 100 - 28 × 250 112 MB	4 20,6
	90,8	3 600	3	MR CI 100 - 28 × 250 112 MB	4 19,3
	105	3 110	1,7	MR CI 80 - 28 × 250 112 MB	4 16,7
	105	3 110	1,9	MR CI 81 - 28 × 250 112 MB	4 16,7
	112	2 930	3,35	MR CI 100 - 28 × 250 112 MB	4 15,7
	133	2 450	2,36	MR CI 80 - 28 × 250 112 MB	4 13,1
	133	2 450	2,65	MR CI 81 - 28 × 250 112 MB	4 13,1
	141	2 310	5	MR CI 100 - 28 × 250 112 MB	4 12,4
	177	1 840	2,5	MR CI 80 - 28 × 250 112 MB	4 9,88
	177	1 840	3	MR CI 81 - 28 × 250 112 MB	4 9,88
	227	1 440	2,5	MR CI 80 - 28 × 250 112 MB	4 7,71
	227	1 440	3	MR CI 81 - 28 × 250 112 MB	4 7,71
	284	1 150	2,5	MR CI 80 - 28 × 250 112 MB	4 6,16
	284	1 150	3	MR CI 81 - 28 × 250 112 MB	4 6,16
7,5	7,26	61 250	1,32	MR C2I 180 - 38 × 300 132 MB ⊠70%	6 158
	7,59	58 550	2	MR C2I 200 - 38 × 300 132 MB ⊠70%	6 151
	7,37	60 300	2,8	MR C2I 225 - 38 × 300 132 MB ⊠70%	6 156
	8,9	49 900	1,32	MR C2I 160 - 38 × 300 132 MB ⊠70%	6 129
	8,86	50 150	1,7	MR C2I 180 - 38 × 300 132 MB ⊠70%	6 130
	9,84	45 200	1,8	MR ICI 200 - 38 × 300 132 MB ⊠70%	6 117
	9,04	49 150	2,8	MR C2I 200 - 38 × 300 132 MB ⊠70%	6 127
	9,18	48 400	3,15	MR C2I 225 - 38 × 300 132 MB ⊠70%	6 125
	11,4	39 050	1,4	MR C2I 160 - 28 × 250 112 MC ⊠70%	4 154
	11,4	39 050	1,4	MR C2I 160 - 38 × 300 132 M	4 154
	11	40 250	1,9	MR C2I 180 - 28 × 250 112 MC ⊠70%	4 158
	11	40 250	1,9	MR C2I 180 - 38 × 300 132 M	4 158
	11,1	40 100	2,12	MR C2I 180 - 38 × 300 132 MB ⊠70%	6 104
	12,3	36 150	2,8	MR ICI 200 - 38 × 300 132 MB ⊠70%	6 93,5
	11,6	38 450	2,8	MR C2I 200 - 38 × 300 132 M	4 151
	11,2	39 600	4	MR C2I 225 - 38 × 300 132 M	4 156

Motor power P_1 hp 1)	Output speed n_2 rpm	Output torque T_2 lb in	Service factor fs	2)	Gear ratio i
7,5	13,1	33 900	1,12	MR C2I 140 - 38 × 300 132 MB ⊠70%	6 87,8
	14,3	31 150	1,18	MR C2I 140 - 28 × 250 112 MC ⊠70%	4 123
	14,3	31 150	1,18	MR C2I 140 - 38 × 300 132 M	4 123
	14,6	30 350	1,4	MR C2I 140 - 38 × 300 132 MB ⊠70%	6 78,6
	14,2	31 250	1,32	MR ICI 160 - 28 × 250 112 MC ⊠70%	4 123
	14,6	30 400	1,32	MR ICI 160 - 38 × 300 132 MB ⊠70%	6 78,6
	13,5	32 800	1,9	MR C2I 160 - 28 × 250 112 MC ⊠70%	4 129
	13,5	32 800	1,9	MR C2I 160 - 38 × 300 132 M	4 129
	13,5	32 950	2,5	MR C2I 180 - 28 × 250 112 MC ⊠70%	4 130
	13,5	32 950	2,5	MR C2I 180 - 38 × 300 132 M	4 130
	15	29 700	2,8	MR ICI 200 - 38 × 300 132 M	4 117
	13,8	32 300	3,75	MR C2I 200 - 38 × 300 132 M	4 127
	17,8	24 950	1,5	MR C2I 140 - 28 × 250 112 MC ⊠70%	4 98,2
	17,8	24 950	1,5	MR C2I 140 - 38 × 300 132 M	4 98,2
	17,8	25 000	1,9	MR ICI 160 - 28 × 250 112 MC ⊠70%	4 98,5
	18,3	24 300	2	MR ICI 160 - 38 × 300 132 MB ⊠70%	6 62,9
	16,9	26 250	2,36	MR C2I 160 - 28 × 250 112 MC ⊠70%	4 103
	16,9	26 250	2,36	MR C2I 160 - 38 × 300 132 M	4 103
	17,3	25 750	2	MR ICI 180 - 28 × 250 112 MC ⊠70%	4 101
	17,7	25 050	2,12	MR ICI 180 - 38 × 300 132 MB ⊠70%	6 64,8
	16,9	26 350	3,15	MR C2I 180 - 38 × 300 132 M	4 104
	18,7	23 750	4	MR ICI 200 - 38 × 300 132 M	4 93,5
	19,9	22 300	1,7	MR C2I 140 - 28 × 250 112 MC ⊠70%	4 87,8
	19,9	22 300	1,7	MR C2I 140 - 38 × 300 132 M	4 87,8
	19,4	22 950	3	MR C2I 160 - 28 × 250 112 MC ⊠70%	4 90,4
	19,4	22 950	3	MR C2I 160 - 38 × 300 132 M	4 90,4
	22,4	19 850	1,12	MR ICI 125 - 28 × 250 112 MC ⊠70%	4 78,1
	22,7	19 600	1,12	MR ICI 125 - 38 × 300 132 MB ⊠70%	6 50,8
	22,4	19 850	1,32	MR ICI 140 - 28 × 250 112 MC ⊠70%	4 78,1
	22,7	19 600	1,32	MR ICI 140 - 38 × 300 132 MB ⊠70%	6 50,8
	22,3	19 950	2	MR C2I 140 - 28 × 250 112 MC ⊠70%	4 78,6
	22,3	19 950	2	MR C2I 140 - 38 × 300 132 M	4 78,6
	22,4	19 850	2,5	MR ICI 160 - 28 × 250 112 MC ⊠70%	4 78,1
	22,3	19 950	2	MR ICI 160 - 38 × 300 132 M	4 78,6
	21,2	21 000	3	MR C2I 160 - 38 × 300 132 M	4 82,7
	21,7	20 450	2,5	MR ICI 180 - 28 × 250 112 MC ⊠70%	4 80,5
	22,2	20 050	3,35	MR ICI 180 - 38 × 300 132 MB ⊠70%	6 51,8
	22,4	19 850	4,75	MR ICI 200 - 38 × 300 132 M	4 78,1
	24,9	17 850	2,12	MR C2I 140 - 28 × 250 112 MC ⊠70%	4 70,2
	24,9	17 850	2,12	MR C2I 140 - 38 × 300 132 M	4 70,2
	24,2	18 350	3,55	MR C2I 160 - 38 × 300 132 M	4 72,3
	27,6	16 100	1,4	MR ICI 125 - 28 × 250 112 MC ⊠70%	4 63,4
	27,6	16 100	1,25	MR ICI 125 - 38 × 300 132 M	4 63,4
	28,3	15 700	1,5	MR ICI 125 - 38 × 300 132 MB ⊠70%	6 40,6
	27,6	16 100	1,6	MR ICI 140 - 28 × 250 112 MC ⊠70%	4 63,4
	28,3	15 700	2	MR ICI 140 - 38 × 300 132 MB ⊠70%	6 40,6
	28,2	15 750	2,36	MR C2I 140 - 28 × 250 112 MC ⊠70%	4 62
	28,2	15 750	2,36	MR C2I 140 - 38 × 300 132 M	4 62
	27,8	15 950	3	MR ICI 160 - 38 × 300 132 M	4 62,9
	26,8	16 550	3,75	MR C2I 160 - 38 × 300 132 M	4 65,2
	31,6	14 050	2,65	MR C2I 140 - 38 × 300 132 M	4 55,4
	34,5	12 900	1,8	MR ICI 125 - 28 × 250 112 MC ⊠70%	4 50,7
	34,5	12 900	1,7	MR ICI 125 - 38 × 300 132 M	4 50,8
	36,8	12 350	1,5	MR CI 125 - 38 × 300 132 MB ⊠70%	6 31,3
	34,5	12 900	2,36	MR ICI 140 - 28 × 250 112 MC ⊠70%	4 50,7
	34,5	12 900	1,9	MR ICI 140 - 38 × 300 132 M	4 50,8
	35,9	12 350	2,5	MR ICI 140 - 38 × 300 132 MB ⊠70%	6 32
	34,7	12 800	2,8	MR C2I 140 - 38 × 300 132 M	4 50,4
	34,8	12 800	4	MR ICI 160 - 38 × 300 132 M	4 50,3
	38,8	11 450	3,35	MR C2I 140 - 38 × 300 132 M	4 45,1
	45,4	9 790	1,25	MR ICI 100 - 28 × 250 112 MC ⊠70%	4 38,5
	47,7	9 510	1	MR CI 100 - 38 × 300 132 MB ⊠70%	6 24,1
	43,1	10 300	2,36	MR ICI 125 - 28 × 250 112 MC ⊠70%	4 40,6
	43,1	10 300	2,24	MR ICI 125 - 38 × 300 132 M	4 40,6
	46	9 860	2,24	MR CI 125 - 38 × 300 132 MB ⊠70%	6 25
	43,8	10 150	3	MR ICI 140 - 28 × 250 112 MC ⊠70%	4 40
	43,1	10 300	3	MR ICI 140 - 38 × 300 132 M	4 40,6
	45,3	9 820	3,55	MR C2I 140 - 38 × 300 132 M	4 38,7

1) Powers valid for continuous duty S1; **increase possible** for duty cycles S2 ... S10 (see ch. 1 «General specifications»): in which case T_2 increases and fs decreases.
2) For complete designation when ordering see ch. 2.

13 - Bevel helical gearmotor selection tables

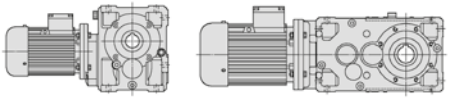

Motor power P_1 hp 1)	Output speed n_2 rpm	Output torque T_2 lb in	Service factor fs	2)	Gear ratio i
7,5	46,6	9 530	4	MR C2I 140 - 38 × 300 132 M	4 37,5
	55,8	7 970	1,4	MR ICI 100 - 28 × 250 112 MC S3 70%	4 31,4
	58,1	7 810	1,18	MR CI 100 - 28 × 250 112 MC S3 70%	4 30,1
	58,1	7 810	1,18	MR CI 100 - 38 × 300 132 M	4 30,1
	59,7	7 600	1,6	MR CI 100 - 38 × 300 132 MB S3 70%	6 19,3
	53,9	8 250	3	MR ICI 125 - 38 × 300 132 M	4 32,5
	56	8 100	2,24	MR CI 125 - 38 × 300 132 M	4 31,3
	57,5	7 890	2,8	MR CI 125 - 38 × 300 132 MB S3 70%	6 20
	54,4	8 170	4	MR C2I 140 - 38 × 300 132 M	4 32,2
	58,8	7 550	5	MR C2I 140 - 38 × 300 132 M	4 29,8
	70,7	6 280	2,12	MR ICI 100 - 28 × 250 112 MC S3 70%	4 24,7
	72,6	6 250	1,5	MR CI 100 - 28 × 250 112 MC S3 70%	4 24,1
	72,6	6 250	1,5	MR CI 100 - 38 × 300 132 M	4 24,1
	68,3	6 500	3,75	MR ICI 125 - 38 × 300 132 M	4 25,6
	70	6 480	3,35	MR CI 125 - 38 × 300 132 M	4 25
	84,1	5 390	1,06	MR CI 81 - 28 × 250 112 MC S3 70%	4 20,8
	84,9	5 230	2,12	MR ICI 100 - 28 × 250 112 MC S3 70%	4 20,6
	90,8	5 000	2,12	MR CI 100 - 28 × 250 112 MC S3 70%	4 19,3
	90,8	5 000	2,12	MR CI 100 - 38 × 300 132 M	4 19,3
	83,2	5 340	4,5	MR ICI 125 - 38 × 300 132 M	4 21
	87,5	5 190	4,25	MR CI 125 - 38 × 300 132 M	4 20
	105	4 320	1,18	MR CI 80 - 28 × 250 112 MC S3 70%	4 16,7
	105	4 320	1,4	MR CI 81 - 28 × 250 112 MC S3 70%	4 16,7
	112	4 070	2,36	MR CI 100 - 28 × 250 112 MC S3 70%	4 15,7
	112	4 070	2,36	MR CI 100 - 38 × 300 132 M	4 15,7
	109	4 150	5	MR CI 125 - 38 × 300 132 M	4 16
	133	3 410	1,7	MR CI 80 - 28 × 250 112 MC S3 70%	4 13,1
	133	3 410	1,9	MR CI 81 - 28 × 250 112 MC S3 70%	4 13,1
	141	3 210	3,55	MR CI 100 - 28 × 250 112 MC S3 70%	4 12,4
	141	3 210	3,55	MR CI 100 - 38 × 300 132 M	4 12,4
	177	2 560	1,8	MR CI 80 - 28 × 250 112 MC S3 70%	4 9,88
	177	2 560	2,12	MR CI 81 - 28 × 250 112 MC S3 70%	4 9,88
	170	2 670	3,55	MR CI 100 - 28 × 250 112 MC S3 70%	4 10,3
	170	2 670	3,55	MR CI 100 - 38 × 300 132 M	4 10,3
	227	2 000	1,8	MR CI 80 - 28 × 250 112 MC S3 70%	4 7,71
	227	2 000	2,12	MR CI 81 - 28 × 250 112 MC S3 70%	4 7,71
	217	2 090	3,55	MR CI 100 - 38 × 300 132 M	4 8,06
	284	1 600	1,8	MR CI 80 - 28 × 250 112 MC S3 70%	4 6,16
	284	1 600	2,12	MR CI 81 - 28 × 250 112 MC S3 70%	4 6,16
	271	1 670	3,55	MR CI 100 - 38 × 300 132 M	4 6,46
10	7,59	78 050	1,5	MR C2I 200 - 38 × 300 132 MC S3 70%	6 151
	7,59	78 050	1,5	MR C2I 200 - 42 × 350 160 M	6 151
	7,37	80 400	2,12	MR C2I 225 - 38 × 300 132 MC S3 70%	6 156
	7,37	80 400	2,12	MR C2I 225 - 42 × 350 160 M	6 156
	7,36	80 500	3	MR C2I 250 - 42 × 350 160 M	6 156
	7,48	79 250	4	MR C2I 280 - 42 × 350 160 M	6 154
	8,86	66 850	1,25	MR C2I 180 - 38 × 300 132 MC S3 70%	6 130
	8,86	66 850	1,25	MR C2I 180 - 42 × 350 160 M	6 130
	9,84	60 250	1,4	MR ICI 200 - 38 × 300 132 MC S3 70%	6 117
	9,04	65 500	2	MR C2I 200 - 38 × 300 132 MC S3 70%	6 127
	9,04	65 500	2	MR C2I 200 - 42 × 350 160 M	6 127
	9,18	64 550	2,36	MR C2I 225 - 38 × 300 132 MC S3 70%	6 125
	9,18	64 550	2,36	MR C2I 225 - 42 × 350 160 M	6 125
	9,34	63 400	4,25	MR C2I 250 - 42 × 350 160 M	6 123
	11	53 650	1,4	MR C2I 180 - 38 × 300 132 MB	4 158
	11,1	53 500	1,6	MR C2I 180 - 38 × 300 132 MC S3 70%	6 104
	11,1	53 500	1,6	MR C2I 180 - 42 × 350 160 M	6 104
	12,3	48 200	2,12	MR ICI 200 - 38 × 300 132 MC S3 70%	6 93,5
	11,8	50 300	1,6	MR ICI 200 - 42 × 350 160 M	6 97,7
	11,6	51 300	2,12	MR C2I 200 - 38 × 300 132 MB	4 151
	11,2	52 850	3	MR C2I 225 - 38 × 300 132 MB	4 156
	12,7	46 550	1,5	MR C2I 160 - 38 × 300 132 MC S3 70%	6 90,4
	12,7	46 550	1,5	MR C2I 160 - 42 × 350 160 M	6 90,4

Motor power P_1 hp 1)	Output speed n_2 rpm	Output torque T_2 lb in	Service factor fs	2)	Gear ratio i
10	13,5	43 750	1,4	MR C2I 160 - 38 × 300 132 MB	4 129
	13,5	43 950	1,9	MR C2I 180 - 38 × 300 132 MB	4 130
	15	39 600	2,12	MR ICI 200 - 38 × 300 132 MB	4 117
	14,7	40 250	2,5	MR ICI 200 - 38 × 300 132 MC S3 70%	6 78,1
	14,7	40 250	2,5	MR ICI 200 - 42 × 350 160 M	6 78,1
	13,8	43 050	3	MR C2I 200 - 38 × 300 132 MB	4 127
	16,4	36 150	1,12	MR C2I 140 - 38 × 300 132 MC S3 70%	6 70,2
	17,8	33 250	1,12	MR C2I 140 - 38 × 300 132 MB	4 98,2
	17,8	33 350	1,5	MR ICI 160 - 28 × 250 132 M B5R	4 98,5
	18,3	32 400	1,5	MR ICI 160 - 38 × 300 132 MC S3 70%	6 62,9
	18,3	32 400	1,5	MR ICI 160 - 42 × 350 160 M	6 62,9
	16,9	35 000	1,8	MR C2I 160 - 38 × 300 132 MB	4 103
	17,3	34 350	1,5	MR ICI 180 - 28 × 250 132 M B5R	4 101
	17,7	33 400	1,6	MR ICI 180 - 38 × 300 132 MC S3 70%	6 64,8
	17,7	33 400	1,6	MR ICI 180 - 42 × 350 160 M	6 64,8
	16,9	35 150	2,36	MR C2I 180 - 38 × 300 132 MB	4 104
	18,7	31 650	3	MR ICI 200 - 38 × 300 132 MB	4 93,5
	17,2	34 450	3,55	MR C2I 200 - 38 × 300 132 MB	4 102
	19,9	29 700	1,25	MR C2I 140 - 38 × 300 132 MB	4 87,8
	19,4	30 600	2,24	MR C2I 160 - 38 × 300 132 MB	4 90,4
	19,4	30 450	2,36	MR C2I 180 - 38 × 300 132 MB	4 90
	19,9	29 750	4,25	MR C2I 200 - 38 × 300 132 MB	4 87,9
	22,4	26 450	0,95	MR ICI 140 - 28 × 250 132 M B5R	4 78,1
	22,7	26 150	1	MR ICI 140 - 38 × 300 132 MC S3 70%	6 50,8
	22,3	26 600	1,5	MR C2I 140 - 38 × 300 132 MB	4 78,6
	22,4	26 450	1,8	MR ICI 160 - 28 × 250 132 M B5R	4 78,1
	22,3	26 600	1,5	MR ICI 160 - 38 × 300 132 MB	4 78,6
	22,9	25 950	2	MR ICI 160 - 38 × 300 132 MC S3 70%	6 50,3
	23,4	25 350	1,9	MR ICI 160 - 42 × 350 160 M	6 49,2
	21,2	28 000	2,24	MR C2I 160 - 38 × 300 132 MB	4 82,7
	21,7	27 250	1,9	MR ICI 180 - 28 × 250 132 M B5R	4 80,5
	22,2	26 700	2,5	MR ICI 180 - 38 × 300 132 MC S3 70%	6 51,8
	22,7	26 150	2	MR ICI 180 - 42 × 350 160 M	6 50,7
	21,1	28 100	3	MR C2I 180 - 38 × 300 132 MB	4 83,1
	22,4	26 450	3,55	MR ICI 200 - 38 × 300 132 MB	4 78,1
	24,9	23 750	1,6	MR C2I 140 - 38 × 300 132 MB	4 70,2
	24,2	24 500	2,65	MR C2I 160 - 38 × 300 132 MB	4 72,3
	24,3	24 350	3	MR C2I 180 - 38 × 300 132 MB	4 72
	27,6	21 450	1,06	MR ICI 125 - 28 × 250 132 MB B5R	4 63,4
	28,3	20 900	1,12	MR ICI 125 - 38 × 300 132 MC S3 70%	6 40,6
	27,6	21 450	1,18	MR ICI 140 - 28 × 250 132 MB B5R	4 63,4
	28,3	20 900	1,5	MR ICI 140 - 38 × 300 132 MC S3 70%	6 40,6
	28,2	20 950	1,7	MR C2I 140 - 38 × 300 132 MB	4 62
	27,8	21 300	2,24	MR ICI 160 - 38 × 300 132 MB	4 62,9
	26,8	22 050	2,8	MR C2I 160 - 38 × 300 132 MB	4 65,2
	27,2	21 800	3	MR ICI 180 - 28 × 250 132 MB B5R	4 64,4
	27	21 950	2,36	MR ICI 180 - 38 × 300 132 MB	4 64,8
	28	21 150	4,75	MR ICI 200 - 38 × 300 132 MB	4 62,5
	31,6	18 750	2	MR C2I 140 - 38 × 300 132 MB	4 55,4
	30,7	19 300	3,35	MR C2I 160 - 38 × 300 132 MB	4 57
	34,5	17 200	1,32	MR ICI 125 - 38 × 300 132 MB	4 50,8
	35,4	16 750	1,5	MR ICI 125 - 38 × 300 132 MC S3 70%	6 32,5
	34,5	17 150	1,8	MR ICI 140 - 28 × 250 132 MB B5R	4 50,7
	34,5	17 200	1,4	MR ICI 140 - 38 × 300 132 MB	4 50,8
	35,9	16 500	1,9	MR ICI 140 - 38 × 300 132 MC S3 70%	6 32
	34,7	17 100	2,12	MR C2I 140 - 38 × 300 132 MB	4 50,4
	34,8	17 050	3	MR ICI 160 - 38 × 300 132 MB	4 50,3
	33,6	17 650	3,35	MR C2I 160 - 38 × 300 132 MB	4 52,1
	37,4	16 200	2,12	MR CI 160 - 42 × 350 160 M	6 30,8
	38,8	15 250	2,5	MR C2I 140 - 38 × 300 132 MB	4 45,1
	43,1	13 750	1,7	MR ICI 125 - 38 × 300 132 MB	4 40,6
	44,9	13 200	1,9	MR ICI 125 - 38 × 300 132 MC S3 70%	6 25,6
	46	13 150	1,7	MR CI 125 - 38 × 300 132 MC S3 70%	6 25
	46	13 150	1,7	MR CI 125 - 42 × 350 160 M	6 25
	43,1	13 750	2,24	MR ICI 140 - 38 × 300 132 MB	4 40,6
	45,3	13 100	2,8	MR C2I 140 - 38 × 300 132 MB	4 38,7
	41,4	14 300	3,55	MR ICI 160 - 38 × 300 132 MB	4 42,3
	46,7	12 950	3,35	MR CI 160 - 42 × 350 160 M	6 24,6

1) Powers valid for continuous duty S1; **increase possible** for duty cycles S2 ... S10 (see ch. 1 «General specifications»): in which case T_2 increases and fs decreases.
2) For complete designation when ordering see ch. 2.
* Mounting position **B5R** (see ch. 1.2).

13 - Bevel helical gearmotor selection tables

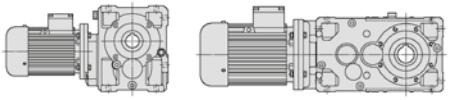

Motor power P_1 hp 1)	Output speed n_2 rpm	Output torque T_2 lb in	Service factor fs	2)	Gear ratio i
10	46,6	12 700	3	MR C2I 140 - 38 × 300 132 MB	4 37,5
	59,7	10 150	1,18	MR CI 100 - 38 × 300 132 MC ⊠ 70%	6 19,3
	53,9	11 000	2,24	MR ICI 125 - 38 × 300 132 MB	4 32,5
	56	10 800	1,7	MR CI 125 - 38 × 300 132 MB	4 31,3
	57,5	10 500	2,12	MR CI 125 - 38 × 300 132 MC ⊠ 70%	6 20
	57,5	10 500	2,12	MR CI 125 - 42 × 350 160 M	6 20
	54,7	10 850	2,8	MR ICI 140 - 38 × 300 132 MB	4 32
	54,4	10 900	3	MR C2I 140 - 38 × 300 132 MB	4 32,2
	57,5	10 500	3	MR CI 140 - 38 × 300 132 MC ⊠ 70%	6 20
	57,5	10 500	3	MR CI 140 - 42 × 350 160 M	6 20
	58,4	10 350	4,75	MR CI 160 - 42 × 350 160 M	6 19,7
	58,8	10 050	3,75	MR C2I 140 - 38 × 300 132 MB	4 29,8
	63,9	9 470	3,15	MR CI 140 - 38 × 300 132 MC ⊠ 70%	6 18
	63,9	9 470	3,15	MR CI 140 - 42 × 350 160 M	6 18
	72,6	8 330	1,12	MR CI 100 - 38 × 300 132 MB	4 24,1
	68,3	8 670	2,8	MR ICI 125 - 38 × 300 132 MB	4 25,6
	70	8 640	2,5	MR CI 125 - 38 × 300 132 MB	4 25
	68,6	8 640	4	MR C2I 140 - 38 × 300 132 MB	4 25,5
	90,8	6 660	1,6	MR CI 100 - 38 × 300 132 MB	4 19,3
	83,2	7 120	3,35	MR ICI 125 - 38 × 300 132 MB	4 21
	87,5	6 910	3,15	MR CI 125 - 38 × 300 132 MB	4 20
	112	5 430	1,8	MR CI 100 - 38 × 300 132 MB	4 15,7
	109	5 530	3,75	MR CI 125 - 38 × 300 132 MB	4 16
	141	4 280	2,65	MR CI 100 - 38 × 300 132 MB	4 12,4
	139	4 360	5,3	MR CI 125 - 38 × 300 132 MB	4 12,6
	170	3 560	2,65	MR CI 100 - 38 × 300 132 MB	4 10,3
	169	3 580	5,6	MR CI 125 - 38 × 300 132 MB	4 10,4
	217	2 790	2,65	MR CI 100 - 38 × 300 132 MB	4 8,06
	219	2 760	5,6	MR CI 125 - 38 × 300 132 MB	4 7,98
	271	2 230	2,65	MR CI 100 - 38 × 300 132 MB	4 6,46
	277	2 180	5,6	MR CI 125 - 38 × 300 132 MB	4 6,31
12,4	11,6	63 600	1,7	MR C2I 200 - 38 × 300 132 MB ⊠ 70%	4 151
	11,2	65 500	2,36	MR C2I 225 - 38 × 300 132 MB ⊠ 70%	4 156
	13,5	54 500	1,5	MR C2I 180 - 38 × 300 132 MB ⊠ 70%	4 130
	15	49 100	1,7	MR ICI 200 - 38 × 300 132 MB ⊠ 70%	4 117
	13,8	53 400	2,36	MR C2I 200 - 38 × 300 132 MB ⊠ 70%	4 127
	14	52 600	3	MR C2I 225 - 38 × 300 132 MB ⊠ 70%	4 125
	16,9	43 400	1,4	MR C2I 160 - 38 × 300 132 MB ⊠ 70%	4 103
	16,9	43 600	1,9	MR C2I 180 - 38 × 300 132 MB ⊠ 70%	4 104
	18,7	39 250	2,5	MR ICI 200 - 38 × 300 132 MB ⊠ 70%	4 93,5
	17,2	42 700	2,8	MR C2I 200 - 38 × 300 132 MB ⊠ 70%	4 102
	19,9	36 850	1	MR C2I 140 - 38 × 300 132 MB ⊠ 70%	4 87,8
	19,4	37 950	1,8	MR C2I 160 - 38 × 300 132 MB ⊠ 70%	4 90,4
	19,4	37 800	1,9	MR C2I 180 - 38 × 300 132 MB ⊠ 70%	4 90
	19,9	36 900	3,55	MR C2I 200 - 38 × 300 132 MB ⊠ 70%	4 87,9
	22,3	33 000	1,18	MR C2I 140 - 38 × 300 132 MB ⊠ 70%	4 78,6
	22,3	33 000	1,18	MR ICI 160 - 38 × 300 132 MB ⊠ 70%	4 78,6
	21,2	34 700	1,8	MR C2I 160 - 38 × 300 132 MB ⊠ 70%	4 82,7
	21,1	34 850	2,36	MR C2I 180 - 38 × 300 132 MB ⊠ 70%	4 83,1
	22,4	32 800	3	MR ICI 200 - 38 × 300 132 MB ⊠ 70%	4 78,1
	21,5	34 150	3,55	MR C2I 200 - 38 × 300 132 MB ⊠ 70%	4 81,4
	24,9	29 450	1,25	MR C2I 140 - 38 × 300 132 MB ⊠ 70%	4 70,2
	24,2	30 350	2,24	MR C2I 160 - 38 × 300 132 MB ⊠ 70%	4 72,3
	24,3	30 200	2,36	MR C2I 180 - 38 × 300 132 MB ⊠ 70%	4 72
	28,2	26 000	1,4	MR C2I 140 - 38 × 300 132 MB ⊠ 70%	4 62
	27,8	26 400	1,8	MR ICI 160 - 38 × 300 132 MB ⊠ 70%	4 62,9
	26,8	27 350	2,24	MR C2I 160 - 38 × 300 132 MB ⊠ 70%	4 65,2
	27	27 200	1,9	MR ICI 180 - 38 × 300 132 MB ⊠ 70%	4 64,8
	26,7	27 500	3	MR C2I 180 - 38 × 300 132 MB ⊠ 70%	4 65,5
	28	26 250	4	MR ICI 200 - 38 × 300 132 MB ⊠ 70%	4 62,5
	31,6	23 250	1,6	MR C2I 140 - 38 × 300 132 MB ⊠ 70%	4 55,4
	30,7	23 950	2,8	MR C2I 160 - 38 × 300 132 MB ⊠ 70%	4 57
	30,8	23 850	3	MR C2I 180 - 38 × 300 132 MB ⊠ 70%	4 56,8

Motor power P_1 hp 1)	Output speed n_2 rpm	Output torque T_2 lb in	Service factor fs	2)	Gear ratio i
12,4	34,5	21 300	1,06	MR ICI 125 - 38 × 300 132 MB ⊠ 70%	4 50,8
	34,5	21 300	1,18	MR ICI 140 - 38 × 300 132 MB ⊠ 70%	4 50,8
	34,7	21 200	1,7	MR C2I 140 - 38 × 300 132 MB ⊠ 70%	4 50,4
	34,8	21 150	2,36	MR ICI 160 - 38 × 300 132 MB ⊠ 70%	4 50,3
	33,6	21 900	2,8	MR C2I 160 - 38 × 300 132 MB ⊠ 70%	4 52,1
	33,8	21 750	3	MR ICI 180 - 38 × 300 132 MB ⊠ 70%	4 51,8
	38,8	18 900	2	MR C2I 140 - 38 × 300 132 MB ⊠ 70%	4 45,1
	38,4	19 150	3,35	MR C2I 160 - 38 × 300 132 MB ⊠ 70%	4 45,6
	43,1	17 050	1,32	MR ICI 125 - 38 × 300 132 MB ⊠ 70%	4 40,6
	43,1	17 050	1,8	MR ICI 140 - 38 × 300 132 MB ⊠ 70%	4 40,6
	45,3	16 250	2,24	MR C2I 140 - 38 × 300 132 MB ⊠ 70%	4 38,7
	41,4	17 750	3	MR ICI 160 - 38 × 300 132 MB ⊠ 70%	4 42,3
	44,3	16 600	3,75	MR C2I 160 - 38 × 300 132 MB ⊠ 70%	4 39,5
	46,6	15 750	2,36	MR C2I 140 - 38 × 300 132 MB ⊠ 70%	4 37,5
	46,7	15 750	3,75	MR C2I 160 - 38 × 300 132 MB ⊠ 70%	4 37,5
	53,9	13 650	1,8	MR ICI 125 - 38 × 300 132 MB ⊠ 70%	4 32,5
	56	13 400	1,32	MR CI 125 - 38 × 300 132 MB ⊠ 70%	4 31,3
	54,7	13 450	2,24	MR ICI 140 - 38 × 300 132 MB ⊠ 70%	4 32
	54,4	13 500	2,36	MR C2I 140 - 38 × 300 132 MB ⊠ 70%	4 32,2
	52,5	14 000	4,25	MR ICI 160 - 38 × 300 132 MB ⊠ 70%	4 33,3
	53,9	13 650	4	MR C2I 160 - 38 × 300 132 MB ⊠ 70%	4 32,5
	58,8	12 500	3	MR C2I 140 - 38 × 300 132 MB ⊠ 70%	4 29,8
	68,3	10 750	2,24	MR ICI 125 - 38 × 300 132 MB ⊠ 70%	4 25,6
	70	10 700	2	MR CI 125 - 38 × 300 132 MB ⊠ 70%	4 25
	67	10 950	2,65	MR ICI 140 - 38 × 300 132 MB ⊠ 70%	4 26,1
	68,6	10 700	3,15	MR C2I 140 - 38 × 300 132 MB ⊠ 70%	4 25,5
	90,8	8 260	1,32	MR CI 100 - 38 × 300 132 MB ⊠ 70%	4 19,3
	83,2	8 830	2,65	MR ICI 125 - 38 × 300 132 MB ⊠ 70%	4 21
	87,5	8 570	2,65	MR CI 125 - 38 × 300 132 MB ⊠ 70%	4 20
	87,5	8 570	3,35	MR CI 140 - 38 × 300 132 MB ⊠ 70%	4 20
	97,2	7 720	4	MR CI 140 - 38 × 300 132 MB ⊠ 70%	4 18
	112	6 730	1,5	MR CI 100 - 38 × 300 132 MB ⊠ 70%	4 15,7
	109	6 860	3	MR CI 125 - 38 × 300 132 MB ⊠ 70%	4 16
	141	5 300	2,12	MR CI 100 - 38 × 300 132 MB ⊠ 70%	4 12,4
	139	5 410	4,25	MR CI 125 - 38 × 300 132 MB ⊠ 70%	4 12,6
	170	4 420	2,12	MR CI 100 - 38 × 300 132 MB ⊠ 70%	4 10,3
	169	4 440	4,5	MR CI 125 - 38 × 300 132 MB ⊠ 70%	4 10,4
	217	3 460	2,12	MR CI 100 - 38 × 300 132 MB ⊠ 70%	4 8,06
	219	3 420	4,5	MR CI 125 - 38 × 300 132 MB ⊠ 70%	4 7,98
	271	2 770	2,12	MR CI 100 - 38 × 300 132 MB ⊠ 70%	4 6,46
	277	2 700	4,5	MR CI 125 - 38 × 300 132 MB ⊠ 70%	4 6,31
15	7,37	120 600	1,4	MR C2I 225 - 42 × 350 160 L	6 156
	7,36	120 700	2	MR C2I 250 - 42 × 350 160 L	6 156
	7,48	118 900	2,65	MR C2I 280 - 42 × 350 160 L	6 154
	9,04	98 300	1,4	MR C2I 200 - 42 × 350 160 L	6 127
	9,18	96 800	1,6	MR C2I 225 - 42 × 350 160 L	6 125
	9,34	95 100	2,8	MR C2I 250 - 42 × 350 160 L	6 123
	9,17	96 950	3,35	MR C2I 280 - 42 × 350 160 L	6 125
	11,6	76 900	1,4	MR C2I 200 - 38 × 300 132 MC ⊠ 70%	4 151
	11,6	76 900	1,4	MR C2I 200 - 42 × 350 160 M	4 151
	11,3	78 600	1,7	MR C2I 200 - 42 × 350 160 L	6 102
	11,2	79 250	2	MR C2I 225 - 38 × 300 132 MC ⊠ 70%	4 156
	11,2	79 250	2	MR C2I 225 - 42 × 350 160 M	4 156
	11,5	77 450	2,12	MR C2I 225 - 42 × 350 160 L	6 100
	11,2	79 350	2,8	MR C2I 250 - 42 × 350 160 M	4 156
	11,4	78 100	3,75	MR C2I 280 - 42 × 350 160 M	4 154
	12,8	69 550	1,06	MR C2I 180 - 42 × 350 160 L	6 90

1) Potenze per servizio continuo S1; per servizi S2 ... S10 è possibile **incrementarle** (ved. cap. 1 «Caratteristiche generali»): proporzionalmente T_2 aumenta e fs diminuisce.
2) Per la designazione completa per l'ordinazione ved. cap. 2.

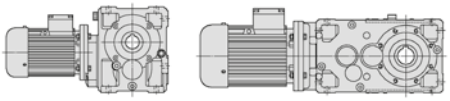

Motor power P_1 hp 1)	Output speed n_2 rpm	Output torque T_2 lb in	Service factor fs	2)	Gear ratio i
15	**13,5**	65 900	1,25	**MR C2I 180 - 38 × 300** 132 MC ⊠70%	4 130
	13,5	65 900	1,25	**MR C2I 180 - 42 × 350** 160 M	4 130
	13,8	64 200	1,32	**MR C2I 180 - 42 × 350** 160 L	6 83,1
	15	59 350	1,4	**MR ICI 200 - 38 × 300** 132 MC ⊠70%	4 117
	14,7	60 350	1,7	**MR ICI 200 - 42 × 350** 160 L	6 78,1
	13,8	64 600	1,9	**MR C2I 200 - 38 × 300** 132 MC ⊠70%	4 127
	13,8	64 600	1,9	**MR C2I 200 - 42 × 350** 160 M	4 127
	14	63 600	2,36	**MR C2I 225 - 38 × 300** 132 MC ⊠70%	4 125
	14	63 600	2,36	**MR C2I 225 - 42 × 350** 160 M	4 125
	14,2	62 500	4	**MR C2I 250 - 42 × 350** 160 M	4 123
	16,9	52 450	1,18	**MR C2I 160 - 38 × 300** 132 MC ⊠70%	4 103
	16,9	52 450	1,18	**MR C2I 160 - 42 × 350** 160 M	4 103
	17,7	50 100	1,06	**MR ICI 180 - 42 × 350** 160 L	6 64,8
	16,9	52 750	1,6	**MR C2I 180 - 38 × 300** 132 MC ⊠70%	4 104
	16,9	52 750	1,6	**MR C2I 180 - 42 × 350** 160 M	4 104
	18,7	47 500	2	**MR ICI 200 - 38 × 300** 132 MC ⊠70%	4 93,5
	17,9	49 600	1,6	**MR ICI 200 - 42 × 350** 160 M	4 97,7
	18,3	48 600	2	**MR ICI 200 - 42 × 350** 160 L	6 62,9
	17,2	51 650	2,36	**MR C2I 200 - 38 × 300** 132 MC ⊠70%	4 102
	17,2	51 650	2,36	**MR C2I 200 - 42 × 350** 160 M	4 102
	17,5	50 900	3,35	**MR C2I 225 - 42 × 350** 160 M	4 100
	19,4	45 900	1,5	**MR C2I 160 - 38 × 300** 132 MC ⊠70%	4 90,4
	19,4	45 900	1,5	**MR C2I 160 - 42 × 350** 160 M	4 90,4
	19,4	45 700	1,6	**MR C2I 180 - 38 × 300** 132 MC ⊠70%	4 90
	19,4	45 700	1,6	**MR C2I 180 - 42 × 350** 160 M	4 90
	19,9	44 650	2,8	**MR C2I 200 - 42 × 350** 160 M	4 87,9
	23,4	38 050	1,25	**MR ICI 160 - 42 × 350** 160 L	6 49,2
	21,2	42 000	1,5	**MR C2I 160 - 38 × 300** 132 MC ⊠70%	4 82,7
	21,2	42 000	1,5	**MR C2I 160 - 42 × 350** 160 M	4 82,7
	21,1	42 200	2	**MR C2I 180 - 38 × 300** 132 MC ⊠70%	4 83,1
	21,1	42 200	2	**MR C2I 180 - 42 × 350** 160 M	4 83,1
	22,4	39 650	2,5	**MR ICI 200 - 38 × 300** 132 MC ⊠70%	4 78,1
	22,4	39 650	2,5	**MR ICI 200 - 42 × 350** 160 M	4 78,1
	21,5	41 350	3	**MR C2I 200 - 42 × 350** 160 M	4 81,4
	24,9	35 650	1,06	**MR C2I 140 - 38 × 300** 132 MC ⊠70%	4 70,2
	24,2	36 700	1,8	**MR C2I 160 - 38 × 300** 132 MC ⊠70%	4 72,3
	24,2	36 700	1,8	**MR C2I 160 - 42 × 350** 160 M	4 72,3
	24,3	36 550	2	**MR C2I 180 - 38 × 300** 132 MC ⊠70%	4 72
	24,3	36 550	2	**MR C2I 180 - 42 × 350** 160 M	4 72
	24,9	35 700	3,55	**MR C2I 200 - 42 × 350** 160 M	4 70,3
	28,2	31 450	1,18	**MR C2I 140 - 38 × 300** 132 MC ⊠70%	4 62
	27,8	31 950	1,5	**MR ICI 160 - 38 × 300** 132 MC ⊠70%	4 62,9
	27,8	31 950	1,5	**MR ICI 160 - 42 × 350** 160 M	4 62,9
	29,2	30 450	1,7	**MR ICI 160 - 42 × 350** 160 L	6 39,4
	26,8	33 100	1,8	**MR C2I 160 - 38 × 300** 132 MC ⊠70%	4 65,2
	26,8	33 100	1,8	**MR C2I 160 - 42 × 350** 160 M	4 65,2
	27	32 900	1,5	**MR ICI 180 - 38 × 300** 132 MC ⊠70%	4 64,8
	27	32 900	1,5	**MR ICI 180 - 42 × 350** 160 M	4 64,8
	28,3	31 350	2,12	**MR ICI 180 - 42 × 350** 160 L	6 40,6
	26,7	33 250	2,5	**MR C2I 180 - 38 × 300** 132 MC ⊠70%	4 65,5
	26,7	33 250	2,5	**MR C2I 180 - 42 × 350** 160 M	4 65,5
	27,8	31 950	3	**MR ICI 200 - 42 × 350** 160 M	4 62,9
	31,6	28 100	1,32	**MR C2I 140 - 38 × 300** 132 MC ⊠70%	4 55,4
	30,7	28 950	2,24	**MR C2I 160 - 38 × 300** 132 MC ⊠70%	4 57
	30,7	28 950	2,24	**MR C2I 160 - 42 × 350** 160 M	4 57
	30,8	28 850	2,5	**MR C2I 180 - 42 × 350** 160 M	4 56,8
	34,5	25 750	0,95	**MR ICI 140 - 38 × 300** 132 MC ⊠70%	4 50,8
	34,7	25 600	1,4	**MR C2I 140 - 38 × 300** 132 MC ⊠70%	4 50,4
	34,8	25 550	2	**MR ICI 160 - 38 × 300** 132 MC ⊠70%	4 50,3
	35,5	25 000	1,9	**MR ICI 160 - 42 × 350** 160 M	4 49,2
	33,6	26 500	2,24	**MR C2I 160 - 38 × 300** 132 MC ⊠70%	4 52,1
	33,6	26 500	2,24	**MR C2I 160 - 42 × 350** 160 M	4 52,1
	37,4	24 300	1,4	**MR CI 160 - 42 × 350** 160 L	6 30,8
	33,8	26 350	2,5	**MR ICI 180 - 38 × 300** 132 MC ⊠70%	4 51,8
	35,9	24 700	3	**MR ICI 180 - 42 × 350** 160 L	6 32
	33,4	26 600	3	**MR C2I 180 - 42 × 350** 160 M	4 52,4
	34,8	25 550	4	**MR ICI 200 - 42 × 350** 160 M	4 50,3

Motor power P_1 hp 1)	Output speed n_2 rpm	Output torque T_2 lb in	Service factor fs	2)	Gear ratio i
15	**38,8**	22 900	1,6	**MR C2I 140 - 38 × 300** 132 MC ⊠70%	4 45,1
	38,4	23 150	2,8	**MR C2I 160 - 38 × 300** 132 MC ⊠70%	4 45,6
	38,4	23 150	2,8	**MR C2I 160 - 42 × 350** 160 M	4 45,6
	38,5	23 050	3,35	**MR C2I 180 - 42 × 350** 160 M	4 45,4
	43,1	20 600	1,12	**MR ICI 125 - 38 × 300** 132 MC ⊠70%	4 40,6
	46	19 750	1,12	**MR CI 125 - 42 × 350** 160 L	6 25
	43,1	20 600	1,5	**MR ICI 140 - 38 × 300** 132 MC ⊠70%	4 40,6
	45,3	19 650	1,8	**MR C2I 140 - 38 × 300** 132 MC ⊠70%	4 38,7
	41,4	21 450	2,5	**MR ICI 160 - 38 × 300** 132 MC ⊠70%	4 42,3
	44,4	20 000	2,5	**MR ICI 160 - 42 × 350** 160 M	4 39,4
	44,3	20 050	3	**MR C2I 160 - 42 × 350** 160 M	4 39,5
	46,7	19 450	2,24	**MR CI 160 - 42 × 350** 160 L	6 24,6
	42,8	20 750	3,55	**MR ICI 180 - 38 × 300** 132 MC ⊠70%	4 40,9
	43,1	20 600	3	**MR ICI 180 - 42 × 350** 160 M	4 40,6
	42,7	20 800	3,55	**MR C2I 180 - 42 × 350** 160 M	4 41
	46,6	19 050	2	**MR C2I 140 - 38 × 300** 132 MC ⊠70%	4 37,5
	46,7	19 000	3	**MR C2I 160 - 42 × 350** 160 M	4 37,5
	53,9	16 500	1,5	**MR ICI 125 - 38 × 300** 132 MC ⊠70%	4 32,5
	57,5	15 800	1,4	**MR CI 125 - 42 × 350** 160 L	6 20
	54,7	16 250	1,9	**MR ICI 140 - 38 × 300** 132 MC ⊠70%	4 32
	54,4	16 350	2	**MR C2I 140 - 38 × 300** 132 MC ⊠70%	4 32,2
	57,5	15 800	1,9	**MR CI 140 - 42 × 350** 160 L	6 20
	52,9	16 800	3	**MR ICI 160 - 42 × 350** 160 M	4 33,1
	53,9	16 500	3,35	**MR C2I 160 - 42 × 350** 160 M	4 32,5
	56,9	15 950	2,12	**MR CI 160 - 42 × 350** 160 M	4 30,8
	58,4	15 550	3,15	**MR CI 160 - 42 × 350** 160 L	6 19,7
	58,8	15 100	2,5	**MR C2I 140 - 38 × 300** 132 MC ⊠70%	4 29,8
	63,9	14 200	2,12	**MR CI 140 - 42 × 350** 160 L	6 18
	58,9	15 100	3,75	**MR C2I 160 - 42 × 350** 160 M	4 29,7
	68,3	13 000	1,9	**MR ICI 125 - 38 × 300** 132 MC ⊠70%	4 25,6
	70	12 950	1,7	**MR CI 125 - 38 × 300** 132 MC ⊠70%	4 25
	70	12 950	1,7	**MR CI 125 - 42 × 350** 160 M	4 25
	67	13 250	2,24	**MR ICI 140 - 38 × 300** 132 MC ⊠70%	4 26,1
	68,6	12 950	2,65	**MR C2I 140 - 38 × 300** 132 MC ⊠70%	4 25,5
	72,9	12 450	2,5	**MR CI 140 - 42 × 350** 160 L	6 15,8
	67,1	13 250	4,25	**MR ICI 160 - 42 × 350** 160 M	4 26,1
	68	13 050	4,25	**MR C2I 160 - 42 × 350** 160 M	4 25,7
	71,1	12 750	3,35	**MR CI 160 - 42 × 350** 160 M	4 24,6
	81	11 200	2,8	**MR CI 140 - 42 × 350** 160 L	6 14,2
	90,8	10 000	1,06	**MR CI 100 - 38 × 300** 132 MC ⊠70%	4 19,3
	83,2	10 700	2,24	**MR ICI 125 - 38 × 300** 132 MC ⊠70%	4 21
	87,5	10 350	2,12	**MR CI 125 - 38 × 300** 132 MC ⊠70%	4 20
	87,5	10 350	2,12	**MR CI 125 - 42 × 350** 160 M	4 20
	87,5	10 350	2,8	**MR CI 140 - 38 × 300** 132 MC ⊠70%	4 20
	87,5	10 350	2,8	**MR CI 140 - 42 × 350** 160 M	4 20
	88,5	10 050	4,5	**MR ICI 160 - 42 × 350** 160 M	4 19,8
	97,2	9 330	3,15	**MR CI 140 - 42 × 350** 160 M	4 18
	112	8 140	1,18	**MR CI 100 - 38 × 300** 132 MC ⊠70%	4 15,7
	109	8 300	2,5	**MR CI 125 - 38 × 300** 132 MC ⊠70%	4 16
	109	8 300	2,5	**MR CI 125 - 42 × 350** 160 M	4 16
	141	6 420	1,8	**MR CI 100 - 38 × 300** 132 MC ⊠70%	4 12,4
	139	6 540	3,55	**MR CI 125 - 38 × 300** 132 MC ⊠70%	4 12,6
	139	6 540	3,55	**MR CI 125 - 42 × 350** 160 M	4 12,6
	170	5 340	1,8	**MR CI 100 - 38 × 300** 132 MC ⊠70%	4 10,3
	169	5 370	3,75	**MR CI 125 - 38 × 300** 132 MC ⊠70%	4 10,4
	169	5 370	3,75	**MR CI 125 - 42 × 350** 160 M	4 10,4
	217	4 180	1,8	**MR CI 100 - 38 × 300** 132 MC ⊠70%	4 8,06
	219	4 140	3,75	**MR CI 125 - 38 × 300** 132 MC ⊠70%	4 7,98
	219	4 140	3,75	**MR CI 125 - 42 × 350** 160 M	4 7,98
	271	3 350	1,8	**MR CI 100 - 38 × 300** 132 MC ⊠70%	4 6,46
	277	3 270	3,75	**MR CI 125 - 38 × 300** 132 MC ⊠70%	4 6,31
	277	3 270	3,75	**MR CI 125 - 42 × 350** 160 M	4 6,31
20	**7,36**	161 000	1,5	**MR C2I 250 - 48 × 350** 180 L	6 156
	7,48	158 500	2	**MR C2I 280 - 48 × 350** 180 L	6 154

1) Powers valid for continuous duty S1; **increase possible** for duty cycles S2 ... S10 (see ch. 1 «General specifications»): in which case T_2 increases and fs decreases.
2) For complete designation when ordering see ch. 2.
* Mounting position **B5R** (see ch. 1.2).

13 - Bevel helical gearmotor selection tables

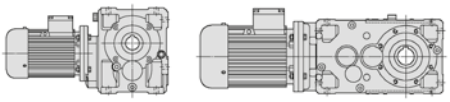

Motor power P_1 hp 1)	Output speed n_2 rpm	Output torque T_2 lb in	Service factor fs	2)		Gear ratio i
20	9,18	129 100	1,18	MR C2I 225 - 48 × 350 180 L	6	125
	9,34	126 800	2,12	MR C2I 250 - 48 × 350 180 L	6	123
	9,17	129 200	2,5	MR C2I 280 - 48 × 350 180 L	6	125
	11,2	105 700	1,5	MR C2I 225 - 42 × 350 160 L	4	156
	11,5	103 300	1,6	MR C2I 225 - 48 × 350 180 L	6	100
	11,2	105 800	2,12	MR C2I 250 - 42 × 350 160 L	4	156
	11,4	104 200	2,8	MR C2I 280 - 42 × 350 160 L	4	154
	13,1	90 600	1,5	MR C2I 200 - 48 × 350 180 L	6	87,9
	13,8	86 100	1,5	MR C2I 200 - 42 × 350 160 L	4	127
	14	84 800	1,8	MR C2I 225 - 42 × 350 160 L	4	125
	14,2	83 350	3	MR C2I 250 - 42 × 350 160 L	4	123
	16,9	70 300	1,18	MR C2I 180 - 42 × 350 160 L	4	104
	18,7	63 350	1,5	MR ICI 200 - 38 × 300 160 L	B5R 4	93,5
	17,9	66 100	1,25	MR ICI 200 - 42 × 350 160 L	4	97,7
	18,3	64 800	1,5	MR ICI 200 - 48 × 350 180 L	6	62,9
	17,2	68 900	1,8	MR C2I 200 - 42 × 350 160 L	4	102
	17,5	67 850	2,5	MR C2I 225 - 42 × 350 160 L	4	100
	17,8	66 650	3,75	MR C2I 250 - 42 × 350 160 L	4	98,5
	19,4	60 950	1,18	MR C2I 180 - 42 × 350 160 L	4	90
	19,9	59 500	2,12	MR C2I 200 - 42 × 350 160 L	4	87,9
	19,4	61 100	2,65	MR C2I 225 - 42 × 350 160 L	4	90,3
	21,1	56 250	1,5	MR C2I 180 - 42 × 350 160 L	4	83,1
	22,4	52 900	1,8	MR ICI 200 - 42 × 350 160 L	4	78,1
	21,5	55 100	2,24	MR C2I 200 - 42 × 350 160 L	4	81,4
	21,8	54 300	3	MR C2I 225 - 42 × 350 160 L	4	80,2
	24,2	48 950	1,32	MR C2I 160 - 42 × 350 160 L	4	72,3
	24,3	48 750	1,5	MR C2I 180 - 42 × 350 160 L	4	72
	24,9	47 600	2,65	MR C2I 200 - 42 × 350 160 L	4	70,3
	24,2	48 900	3,15	MR C2I 225 - 42 × 350 160 L	4	72,2
	27,8	42 600	1,12	MR ICI 160 - 42 × 350 160 L	4	62,9
	26,8	44 150	1,4	MR C2I 160 - 42 × 350 160 L	4	65,2
	28,3	41 800	1,6	MR ICI 180 - 48 × 350 180 L	6	40,6
	26,7	44 350	1,8	MR C2I 180 - 42 × 350 160 L	4	65,5
	27,8	42 600	2,24	MR ICI 200 - 42 × 350 160 L	4	62,9
	27,3	43 450	2,8	MR C2I 200 - 42 × 350 160 L	4	64,2
	30,7	38 600	1,7	MR C2I 160 - 42 × 350 160 L	4	57
	30,8	38 450	1,9	MR C2I 180 - 42 × 350 160 L	4	56,8
	31,6	37 550	3,35	MR C2I 200 - 42 × 350 160 L	4	55,5
	34,7	34 150	1,06	MR C2I 140 - 38 × 300 160 L	B5R 4	50,4
	35,5	33 350	1,4	MR ICI 160 - 42 × 350 160 L	4	49,2
	33,6	35 300	1,7	MR C2I 160 - 42 × 350 160 L	4	52,1
	35,9	32 950	2,24	MR ICI 180 - 48 × 350 180 L	6	32
	33,4	35 500	2,24	MR C2I 180 - 42 × 350 160 L	4	52,4
	34,8	34 050	3	MR ICI 200 - 42 × 350 160 L	4	50,3
	32,5	36 500	3,35	MR C2I 200 - 42 × 350 160 L	4	53,9
	37,4	32 400	2,24	MR CI 200 - 48 × 350 180 L	6	30,8
	38,8	30 500	1,25	MR C2I 140 - 38 × 300 160 L	B5R 4	45,1
	38,4	30 900	2,12	MR C2I 160 - 42 × 350 160 L	4	45,6
	38,5	30 750	2,65	MR C2I 180 - 42 × 350 160 L	4	45,4
	43,1	27 500	1,12	MR ICI 140 - 38 × 300 160 L	B5R 4	40,6
	45,3	26 200	1,4	MR C2I 140 - 38 × 300 160 L	B5R 4	38,7
	44,4	26 650	1,9	MR ICI 160 - 42 × 350 160 L	4	39,4
	44,3	26 750	2,24	MR C2I 160 - 42 × 350 160 L	4	39,5
	46,7	25 900	1,6	MR CI 160 - 48 × 350 180 L	6	24,6
	43,1	27 450	2,24	MR ICI 180 - 42 × 350 160 L	4	40,6
	42,7	27 750	2,65	MR C2I 180 - 42 × 350 160 L	4	41
	41,4	28 600	3,55	MR ICI 200 - 42 × 350 160 L	4	42,3
	46,7	25 900	3,35	MR CI 200 - 48 × 350 180 L	6	24,6
	46,6	25 400	1,5	MR C2I 140 - 38 × 300 160 L	B5R 4	37,5
	46,7	25 350	2,24	MR C2I 160 - 42 × 350 160 L	4	37,5
	46,9	25 250	3,15	MR C2I 180 - 42 × 350 160 L	4	37,3

Motor power P_1 hp 1)	Output speed n_2 rpm	Output torque T_2 lb in	Service factor fs	2)		Gear ratio i
20	57,5	21 050	1,06	MR CI 125 - 48 × 350 180 L	6	20
	54,7	21 700	1,4	MR ICI 140 - 38 × 300 160 L	B5R 4	32
	54,4	21 800	1,5	MR C2I 140 - 38 × 300 160 L	B5R 4	32,2
	57,5	21 050	1,5	MR CI 140 - 48 × 350 180 L	6	20
	52,9	22 400	2,24	MR ICI 160 - 42 × 350 160 L	4	33,1
	53,9	22 000	2,5	MR C2I 160 - 42 × 350 160 L	4	32,5
	56,9	21 300	1,6	MR CI 160 - 42 × 350 160 L	4	30,8
	58,4	20 700	2,36	MR CI 160 - 48 × 350 180 L	6	19,7
	54,7	21 650	3,15	MR ICI 180 - 42 × 350 160 L	4	32
	52	22 800	3,15	MR C2I 180 - 42 × 350 160 L	4	33,7
	56,7	21 350	2,8	MR CI 180 - 48 × 350 180 L	6	20,3
	58,4	20 700	4,75	MR CI 200 - 48 × 350 180 L	6	19,7
	58,8	20 150	1,8	MR C2I 140 - 38 × 300 160 L	B5R 4	29,8
	63,9	18 950	1,6	MR CI 140 - 48 × 350 180 L	6	18
	58,9	20 100	2,8	MR C2I 160 - 42 × 350 160 L	4	29,7
	70	17 300	1,25	MR CI 125 - 42 × 350 160 L	4	25
	67	17 700	1,7	MR ICI 140 - 38 × 300 160 L	B5R 4	26,1
	68,6	17 300	2	MR C2I 140 - 38 × 300 160 L	B5R 4	25,5
	72,9	16 600	1,8	MR CI 140 - 48 × 350 180 L	6	15,8
	67,1	17 650	3,15	MR ICI 160 - 42 × 350 160 L	4	26,1
	68	17 450	3,15	MR C2I 160 - 42 × 350 160 L	4	25,7
	71,1	17 000	2,5	MR CI 160 - 42 × 350 160 L	4	24,6
	81	14 950	2,12	MR CI 140 - 48 × 350 180 L	6	14,2
	87,5	13 850	1,6	MR CI 125 - 42 × 350 160 L	4	20
	87,5	13 850	2,12	MR CI 140 - 42 × 350 160 L	4	20
	88,5	13 400	3,35	MR ICI 160 - 42 × 350 160 L	4	19,8
	88,9	13 600	3,35	MR CI 160 - 42 × 350 160 L	4	19,7
	97,2	12 450	2,5	MR CI 140 - 42 × 350 160 L	4	18
	97,2	12 450	3,75	MR CI 160 - 42 × 350 160 L	4	18
	109	11 050	1,9	MR CI 125 - 42 × 350 160 L	4	16
	111	10 900	2,65	MR CI 140 - 42 × 350 160 L	4	15,8
	106	11 450	3,75	MR CI 160 - 42 × 350 160 L	4	16,5
	123	9 810	3,15	MR CI 140 - 42 × 350 160 L	4	14,2
	139	8 720	2,65	MR CI 125 - 42 × 350 160 L	4	12,6
	169	7 170	2,8	MR CI 125 - 42 × 350 160 L	4	10,4
	219	5 520	2,8	MR CI 125 - 42 × 350 160 L	4	7,98
	277	4 360	2,8	MR CI 125 - 42 × 350 160 L	4	6,31
25	7,48	198 100	1,6	MR C2I 280 - 55 × 400 200 LR	6	154
	7,36	201 200	2	MR C2I 320 - 55 × 400 200 LR	6	156
	7,36	201 200	2,5	MR C2I 321 - 55 × 400 200 LR	6	156
	7,15	207 300	3,15	MR C2I 360 - 55 × 400 200 LR	6	161
	9,34	158 500	1,7	MR C2I 250 - 55 × 400 200 LR	6	123
	9,17	161 600	2	MR C2I 280 - 55 × 400 200 LR	6	125
	8,91	166 200	2,8	MR C2I 320 - 55 × 400 200 LR	6	129
	8,91	166 200	3,55	MR C2I 321 - 55 × 400 200 LR	6	129
	11,5	129 100	1,32	MR C2I 225 - 55 × 400 200 LR	6	100
	11,2	132 200	1,7	MR C2I 250 - 48 × 350 180 M	4	156
	11,7	126 800	2	MR C2I 250 - 55 × 400 200 LR	6	98,5
	11,4	130 200	2,24	MR C2I 280 - 48 × 350 180 M	4	154
	11,5	129 200	2,65	MR C2I 280 - 55 × 400 200 LR	6	100
	12,7	116 200	1,5	MR C2I 225 - 55 × 400 200 LR	6	90,3
	12,8	115 500	3	MR C2I 280 - 55 × 400 200 LR	6	89,7
	13,8	107 600	1,18	MR C2I 200 - 48 × 350 180 M	4	127
	14	106 000	1,5	MR C2I 225 - 48 × 350 180 M	4	125
	14,3	103 300	1,7	MR C2I 225 - 55 × 400 200 LR	6	80,2
	14,2	104 200	2,36	MR C2I 250 - 48 × 350 180 M	4	123
	14	106 200	3	MR C2I 280 - 48 × 350 180 M	4	125
	18,3	81 000	1,18	MR ICI 200 - 55 × 400 200 LR	6	62,9
	17,2	86 100	1,4	MR C2I 200 - 48 × 350 180 M	4	102
	17,5	84 800	2	MR C2I 225 - 48 × 350 180 M	4	100
	17,8	83 350	3	MR C2I 250 - 48 × 350 180 M	4	98,5
	19,9	74 400	1,7	MR C2I 200 - 48 × 350 180 M	4	87,9
	19,4	76 400	2,12	MR C2I 225 - 48 × 350 180 M	4	90,3
	19,7	75 300	3,35	MR C2I 250 - 48 × 350 180 M	4	89

1) Powers valid for continuous duty S1; **increase possible** for duty cycles S2 ... S10 (see ch. 1 «General specifications»): in which case T_2 increases and fs decreases.
2) For complete designation when ordering see ch. 2.
* Mounting position **B5R** (see ch. 1.2).

13 - Bevel helical gearmotor selection tables

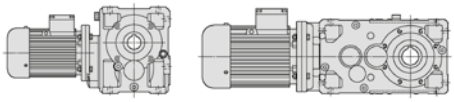

Motor power P_1 hp 1)	Output speed n_2 rpm	Output torque T_2 lb in	Service factor fs	2)	Gear ratio i
25	21,1	70 300	1,18	MR C2I 180 - 48 × 350 180 M 4	83,1
	22,3	66 550	1,25	MR ICI 200 - 48 × 350 180 M 4	78,6
	23,4	63 400	1,5	MR ICI 200 - 55 × 400 200 LR 6	49,2
	21,5	68 900	1,8	MR C2I 200 - 48 × 350 180 M 4	81,4
	21,8	67 850	2,5	MR C2I 225 - 48 × 350 180 M 4	80,2
	22,2	66 650	3,55	MR C2I 250 - 48 × 350 180 M 4	78,8
	24,3	60 950	1,18	MR C2I 180 - 48 × 350 180 M 4	72
	24,9	59 500	2,12	MR C2I 200 - 48 × 350 180 M 4	70,3
	24,2	61 100	2,65	MR C2I 225 - 48 × 350 180 M 4	72,2
	26,7	55 450	1,5	MR C2I 180 - 48 × 350 180 M 4	65,5
	27,8	53 250	1,8	MR ICI 200 - 48 × 350 180 M 4	62,9
	27,3	54 300	2,24	MR C2I 200 - 48 × 350 180 M 4	64,2
	27,7	53 500	3	MR C2I 225 - 48 × 350 180 M 4	63,2
	30,7	48 250	1,4	MR C2I 160 - 48 × 350 180 M 4	57
	30,8	48 050	1,5	MR C2I 180 - 48 × 350 180 M 4	56,8
	31,6	46 950	2,65	MR C2I 200 - 48 × 350 180 M 4	55,5
	30,7	48 200	3,35	MR C2I 225 - 48 × 350 180 M 4	56,9
	35,5	41 650	1,12	MR ICI 160 - 48 × 350 180 M 4	49,2
	33,6	44 150	1,4	MR C2I 160 - 48 × 350 180 M 4	52,1
	33,4	44 350	1,8	MR C2I 180 - 48 × 350 180 M 4	52,4
	34,8	42 600	2,36	MR ICI 200 - 48 × 350 180 M 4	50,3
	32,5	45 600	2,65	MR C2I 200 - 48 × 350 180 M 4	53,9
	37,4	40 450	1,8	MR CI 200 - 55 × 400 200 LR 6	30,8
	33	44 900	3,35	MR C2I 225 - 48 × 350 180 M 4	53,1
	38,4	38 600	1,7	MR C2I 160 - 48 × 350 180 M 4	45,6
	38,5	38 450	2,12	MR C2I 180 - 48 × 350 180 M 4	45,4
	37,6	39 400	3	MR C2I 200 - 48 × 350 180 M 4	46,6
	44,4	33 350	1,5	MR ICI 160 - 48 × 350 180 M 4	39,4
	44,3	33 450	1,8	MR C2I 160 - 48 × 350 180 M 4	39,5
	46,7	32 400	1,32	MR CI 160 - 55 × 400 200 LR 6	24,6
	43,1	34 350	1,8	MR ICI 180 - 48 × 350 180 M 4	40,6
	42,7	34 700	2,12	MR C2I 180 - 48 × 350 180 M 4	41
	41,4	35 750	3	MR ICI 200 - 48 × 350 180 M 4	42,3
	41,1	36 050	3,15	MR C2I 200 - 48 × 350 180 M 4	42,6
	46,7	32 400	2,65	MR CI 200 - 55 × 400 200 LR 6	24,6
	46,7	31 700	1,8	MR C2I 160 - 48 × 350 180 M 4	37,5
	46,9	31 550	2,5	MR C2I 180 - 48 × 350 180 M 4	37,3
	49,6	29 850	3,75	MR C2I 200 - 48 × 350 180 M 4	35,3
	52,9	28 000	1,8	MR ICI 160 - 48 × 350 180 M 4	33,1
	53,9	27 500	2	MR C2I 160 - 48 × 350 180 M 4	32,5
	56,9	26 600	1,32	MR CI 160 - 48 × 350 180 M 4	30,8
	58,4	25 900	1,9	MR CI 160 - 55 × 400 200 LR 6	19,7
	54,7	27 050	2,5	MR ICI 180 - 48 × 350 180 M 4	32
	52	28 500	2,5	MR C2I 180 - 48 × 350 180 M 4	33,7
	56,7	26 700	2,24	MR CI 180 - 55 × 400 200 LR 6	20,3
	52,5	28 200	4,25	MR ICI 200 - 48 × 350 180 M 4	33,3
	54,2	27 300	4	MR C2I 200 - 48 × 350 180 M 4	32,3
	56,9	26 600	2,65	MR CI 200 - 48 × 350 180 M 4	30,8
	58,4	25 900	4	MR CI 200 - 55 × 400 200 LR 6	19,7
	58,9	25 150	2,36	MR C2I 160 - 48 × 350 180 M 4	29,7
	59,2	25 050	3,15	MR C2I 180 - 48 × 350 180 M 4	29,6
	61,6	24 550	2,5	MR CI 180 - 55 × 400 200 LR 6	18,7
	62,6	23 700	4,75	MR C2I 200 - 48 × 350 180 M 4	28
	70	21 600	1	MR CI 125 - 48 × 350 180 M 4	25
	67,1	22 050	2,5	MR ICI 160 - 48 × 350 180 M 4	26,1
	68	21 800	2,5	MR C2I 160 - 48 × 350 180 M 4	25,7
	71,1	21 300	2	MR CI 160 - 48 × 350 180 M 4	24,6
	65,6	22 600	3,15	MR C2I 180 - 48 × 350 180 M 4	26,7
	71,9	21 050	3	MR CI 180 - 55 × 400 200 LR 6	16
	71,1	21 300	4	MR CI 200 - 48 × 350 180 M 4	24,6
	87,5	17 300	1,32	MR CI 125 - 48 × 350 180 M 4	20
	87,5	17 300	1,7	MR CI 140 - 48 × 350 180 M 4	20
	88,5	16 750	2,65	MR ICI 160 - 48 × 350 180 M 4	19,8
	88,9	17 000	2,65	MR CI 160 - 48 × 350 180 M 4	19,7
	86,3	17 550	3,35	MR CI 180 - 48 × 350 180 M 4	20,3
	97,2	15 550	1,9	MR CI 140 - 48 × 350 180 M 4	18
	97,2	15 550	3	MR CI 160 - 48 × 350 180 M 4	18

Motor power P_1 hp 1)	Output speed n_2 rpm	Output torque T_2 lb in	Service factor fs	2)	Gear ratio i
25	109	13 850	1,5	MR CI 125 - 48 × 350 180 M 4	16
	111	13 650	2,12	MR CI 140 - 48 × 350 180 M 4	15,8
	106	14 300	3	MR CI 160 - 48 × 350 180 M 4	16,5
	123	12 250	2,5	MR CI 140 - 48 × 350 180 M 4	14,2
	123	12 250	4	MR CI 160 - 48 × 350 180 M 4	14,2
	139	10 900	2,12	MR CI 125 - 48 × 350 180 M 4	12,6
	136	11 100	2,5	MR CI 140 - 48 × 350 180 M 4	12,9
	134	11 250	4,25	MR CI 160 - 48 × 350 180 M 4	13
	152	9 930	2,5	MR CI 140 - 48 × 350 180 M 4	11,5
	153	9 860	4,25	MR CI 160 - 48 × 350 180 M 4	11,4
	169	8 960	2,24	MR CI 125 - 48 × 350 180 M 4	10,4
	178	8 520	2,5	MR CI 140 - 48 × 350 180 M 4	9,86
	177	8 540	4,25	MR CI 160 - 48 × 350 180 M 4	9,88
	219	6 900	2,24	MR CI 125 - 48 × 350 180 M 4	7,98
	227	6 660	4,25	MR CI 160 - 48 × 350 180 M 4	7,71
	277	5 450	2,24	MR CI 125 - 48 × 350 180 M 4	6,31
	284	5 320	4,25	MR CI 160 - 48 × 350 180 M 4	6,16
30	7,48	237 800	1,32	MR C2I 280 - 55 × 400 200 L 6	154
	7,36	241 400	1,6	MR C2I 320 - 55 × 400 200 L 6	156
	7,36	241 400	2	MR C2I 321 - 55 × 400 200 L 6	156
	7,15	248 700	2,65	MR C2I 360 - 55 × 400 200 L 6	161
	9,34	190 200	1,4	MR C2I 250 - 55 × 400 200 L 6	123
	9,17	193 900	1,6	MR C2I 280 - 55 × 400 200 L 6	125
	8,91	199 400	2,36	MR C2I 320 - 55 × 400 200 L 6	129
	8,91	199 400	3	MR C2I 321 - 55 × 400 200 L 6	129
	11,2	158 700	1,4	MR C2I 250 - 48 × 350 180 L 4	156
	11,7	152 200	1,7	MR C2I 250 - 55 × 400 200 L 6	98,5
	11,4	156 200	1,9	MR C2I 280 - 48 × 350 180 L 4	154
	11,5	155 100	2,12	MR C2I 280 - 55 × 400 200 L 6	100
	12,7	139 500	1,18	MR C2I 225 - 55 × 400 200 L 6	90,3
	12,9	137 500	1,9	MR C2I 250 - 55 × 400 200 L 6	89
	12,8	138 600	2,5	MR C2I 280 - 55 × 400 200 L 6	89,7
	14	127 200	1,18	MR C2I 225 - 48 × 350 180 L 4	125
	14,3	123 900	1,4	MR C2I 225 - 55 × 400 200 L 6	80,2
	14,2	125 000	2	MR C2I 250 - 48 × 350 180 L 4	123
	14	127 400	2,5	MR C2I 280 - 48 × 350 180 L 4	125
	17,2	103 300	1,18	MR C2I 200 - 48 × 350 180 L 4	102
	17,5	101 800	1,6	MR C2I 225 - 48 × 350 180 L 4	100
	17,8	100 000	2,5	MR C2I 250 - 48 × 350 180 L 4	98,5
	17,4	101 900	3,15	MR C2I 280 - 48 × 350 180 L 4	100
	19,9	89 300	1,4	MR C2I 200 - 48 × 350 180 L 4	87,9
	19,4	91 650	1,7	MR C2I 225 - 48 × 350 180 L 4	90,3
	19,7	90 400	2,8	MR C2I 250 - 48 × 350 180 L 4	89
	23,4	76 100	1,25	MR ICI 200 - 55 × 400 200 L 6	49,2
	21,5	82 650	1,5	MR C2I 200 - 48 × 350 180 L 4	81,4
	21,8	81 450	2	MR C2I 225 - 48 × 350 180 L 4	80,2
	22,2	80 000	3	MR C2I 250 - 48 × 350 180 L 4	78,8
	24,9	71 450	1,8	MR C2I 200 - 48 × 350 180 L 4	70,3
	24,2	73 350	2,12	MR C2I 225 - 48 × 350 180 L 4	72,2
	24,6	72 300	3,35	MR C2I 250 - 48 × 350 180 L 4	71,2
	26,7	66 550	1,25	MR C2I 180 - 48 × 350 180 L 4	65,5
	27,8	63 900	1,5	MR ICI 200 - 48 × 350 180 L 4	62,9
	27,3	65 200	1,8	MR C2I 200 - 48 × 350 180 L 4	64,2
	27,7	64 200	2,5	MR C2I 225 - 48 × 350 180 L 4	63,2
	30,8	57 650	1,25	MR C2I 180 - 48 × 350 180 L 4	56,8
	31,6	56 300	2,24	MR C2I 200 - 48 × 350 180 L 4	55,5
	30,7	57 800	2,8	MR C2I 225 - 48 × 350 180 L 4	56,9
	33,6	52 950	1,12	MR C2I 160 - 48 × 350 180 L 4	52,1
	33,4	53 200	1,5	MR C2I 180 - 48 × 350 180 L 4	52,4
	34,8	51 100	2	MR ICI 200 - 48 × 350 180 L 4	50,3
	32,5	54 700	2,24	MR C2I 200 - 48 × 350 180 L 4	53,9
	37,4	48 550	1,5	MR CI 200 - 55 × 400 200 L 6	30,8
	33	53 900	2,8	MR C2I 225 - 48 × 350 180 L 4	53,1

1) Powers valid for continuous duty S1; **increase possible** for duty cycles S2 ... S10 (see ch. 1 «General specifications»): in which case T_2 increases and fs decreases.
2) For complete designation when ordering see ch. 2.

13 - Bevel helical gearmotor selection tables

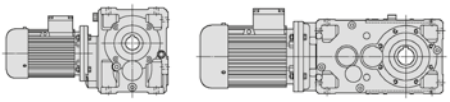

Motor power P_1 hp 1)	Output speed n_2 rpm	Output torque T_2 lb in	Service factor fs	2)		Gear ratio i
30	**38,4**	46 300	1,4	**MR C2I 160 - 48 × 350** 180 L	4	45,6
	38,5	46 100	1,7	**MR C2I 180 - 48 × 350** 180 L	4	45,4
	37,6	47 300	2,5	**MR C2I 200 - 48 × 350** 180 L	4	46,6
	36,6	48 550	3,35	**MR C2I 225 - 48 × 350** 180 L	4	47,8
	44,4	40 000	1,25	**MR ICI 160 - 48 × 350** 180 L	4	39,4
	44,3	40 150	1,5	**MR C2I 160 - 48 × 350** 180 L	4	39,5
	46,7	38 850	1,12	**MR CI 160 - 55 × 400** 200 L	6	24,6
	43,1	41 200	1,5	**MR ICI 180 - 48 × 350** 180 L	4	40,6
	42,7	41 650	1,8	**MR C2I 180 - 48 × 350** 180 L	4	41
	41,4	42 900	2,36	**MR ICI 200 - 48 × 350** 180 L	4	42,3
	41,1	43 250	2,65	**MR C2I 200 - 48 × 350** 180 L	4	42,6
	46,7	38 850	2,24	**MR CI 200 - 55 × 400** 200 L	6	24,6
	42,3	42 050	3,75	**MR C2I 225 - 48 × 350** 180 L	4	41,4
	46,7	38 050	1,5	**MR C2I 160 - 48 × 350** 180 L	4	37,5
	46,9	37 900	2,12	**MR C2I 180 - 48 × 350** 180 L	4	37,3
	49,6	35 850	3,15	**MR C2I 200 - 48 × 350** 180 L	4	35,3
	52,9	33 600	1,5	**MR ICI 160 - 48 × 350** 180 L	4	33,1
	53,9	33 000	1,7	**MR C2I 160 - 48 × 350** 180 L	4	32,5
	58,4	31 100	1,6	**MR CI 160 - 55 × 400** 200 L	6	19,7
	54,7	32 500	2,12	**MR ICI 180 - 48 × 350** 180 L	4	32
	52	34 200	2,12	**MR C2I 180 - 48 × 350** 180 L	4	33,7
	56,7	32 000	1,9	**MR CI 180 - 55 × 400** 200 L	6	20,3
	52,5	33 850	3,55	**MR ICI 200 - 48 × 350** 180 L	4	33,3
	54,2	32 800	3,35	**MR C2I 200 - 48 × 350** 180 L	4	32,3
	56,9	31 900	2,24	**MR CI 200 - 48 × 350** 180 L	4	30,8
	58,4	31 100	3,15	**MR CI 200 - 55 × 400** 200 L	6	19,7
	58,9	30 150	1,9	**MR C2I 160 - 48 × 350** 180 L	4	29,7
	63,9	28 400	1,7	**MR CI 160 - 55 × 400** 200 L	6	18
	59,2	30 050	2,65	**MR C2I 180 - 48 × 350** 180 L	4	29,6
	61,6	29 450	2,12	**MR CI 180 - 55 × 400** 200 L	6	18,7
	62,6	28 400	4	**MR C2I 200 - 48 × 350** 180 L	4	28
	67,1	26 500	2,12	**MR ICI 160 - 48 × 350** 180 L	4	26,1
	68	26 150	2,12	**MR C2I 160 - 48 × 350** 180 L	4	25,7
	71,1	25 550	1,6	**MR CI 160 - 48 × 350** 180 L	4	24,6
	66,8	26 600	2,24	**MR ICI 180 - 48 × 350** 180 L	4	26,2
	65,6	27 100	2,65	**MR C2I 180 - 48 × 350** 180 L	4	26,7
	71,9	25 250	2,5	**MR CI 180 - 55 × 400** 200 L	6	16
	66,5	26 750	3,55	**MR ICI 200 - 48 × 350** 180 L	4	26,3
	68,4	26 000	4,25	**MR C2I 200 - 48 × 350** 180 L	4	25,6
	71,1	25 550	3,35	**MR CI 200 - 48 × 350** 180 L	4	24,6
	78,1	23 250	2,8	**MR CI 180 - 55 × 400** 200 L	6	14,7
	87,5	20 750	1,06	**MR CI 125 - 48 × 350** 180 L	4	20
	87,5	20 750	1,4	**MR CI 140 - 48 × 350** 180 L	4	20
	88,5	20 050	2,24	**MR ICI 160 - 48 × 350** 180 L	4	19,8
	88,9	20 450	2,24	**MR CI 160 - 48 × 350** 180 L	4	19,7
	86,3	21 050	2,8	**MR CI 180 - 48 × 350** 180 L	4	20,3
	97,2	18 650	1,6	**MR CI 140 - 48 × 350** 180 L	4	18
	97,2	18 650	2,5	**MR CI 160 - 48 × 350** 180 L	4	18
	109	16 600	1,25	**MR CI 125 - 48 × 350** 180 L	4	16
	111	16 350	1,8	**MR CI 140 - 48 × 350** 180 L	4	15,8
	106	17 150	2,5	**MR CI 160 - 48 × 350** 180 L	4	16,5
	123	14 700	2,12	**MR CI 140 - 48 × 350** 180 L	4	14,2
	123	14 700	3,35	**MR CI 160 - 48 × 350** 180 L	4	14,2
	139	13 100	1,8	**MR CI 125 - 48 × 350** 180 L	4	12,6
	136	13 350	2,12	**MR CI 140 - 48 × 350** 180 L	4	12,9
	134	13 500	3,55	**MR CI 160 - 48 × 350** 180 L	4	13
	152	11 900	2,12	**MR CI 140 - 48 × 350** 180 L	4	11,5
	153	11 850	3,55	**MR CI 160 - 48 × 350** 180 L	4	11,4
	169	10 750	1,8	**MR CI 125 - 48 × 350** 180 L	4	10,4
	178	10 200	2,12	**MR CI 140 - 48 × 350** 180 L	4	9,86
	177	10 250	3,55	**MR CI 160 - 48 × 350** 180 L	4	9,88
	219	8 270	1,8	**MR CI 125 - 48 × 350** 180 L	4	7,98
	227	8 000	3,55	**MR CI 160 - 48 × 350** 180 L	4	7,71
	277	6 540	1,8	**MR CI 125 - 48 × 350** 180 L	4	6,31
	284	6 390	3,55	**MR CI 160 - 48 × 350** 180 L	4	6,16

Motor power P_1 hp 1)	Output speed n_2 rpm	Output torque T_2 lb in	Service factor fs	2)		Gear ratio i
40	**7,36**	321 900	1,5	**MR C2I 321 - 60 × 450** 225 M	6	156
	7,15	331 600	2	**MR C2I 360 - 60 × 450** 225 M	6	161
	9,17	258 500	1,25	**MR C2I 280 - 60 × 450** 225 M	6	125
	8,91	265 900	1,8	**MR C2I 320 - 60 × 450** 225 M	6	129
	8,91	265 900	2,24	**MR C2I 321 - 60 × 450** 225 M	6	129
	9,06	261 500	2,5	**MR C2I 360 - 60 × 450** 225 M	6	127
	11,7	202 900	1,32	**MR C2I 250 - 60 × 450** 225 M	6	98,5
	11,4	208 300	1,4	**MR C2I 280 - 55 × 400** 200 L	4	154
	11,5	206 800	1,6	**MR C2I 280 - 60 × 450** 225 M	6	100
	11,2	211 500	1,7	**MR C2I 320 - 55 × 400** 200 L	4	156
	11,2	211 500	2,12	**MR C2I 321 - 55 × 400** 200 L	4	156
	10,9	217 900	3	**MR C2I 360 - 55 × 400** 200 L	4	161
	12,9	183 400	1,4	**MR C2I 250 - 60 × 450** 225 M	6	89
	12,8	184 800	1,9	**MR C2I 280 - 60 × 450** 225 M	6	89,7
	14,2	166 700	1,5	**MR C2I 250 - 55 × 400** 200 L	4	123
	14	169 900	1,9	**MR C2I 280 - 55 × 400** 200 L	4	125
	13,6	174 700	2,5	**MR C2I 320 - 55 × 400** 200 L	4	129
	13,6	174 700	3,15	**MR C2I 321 - 55 × 400** 200 L	4	129
	17,5	135 700	1,25	**MR C2I 225 - 55 × 400** 200 L	4	100
	17,8	133 300	1,8	**MR C2I 250 - 55 × 400** 200 L	4	98,5
	17,4	135 900	2,36	**MR C2I 280 - 55 × 400** 200 L	4	100
	17	139 800	3	**MR C2I 320 - 55 × 400** 200 L	4	103
	19,4	122 200	1,32	**MR C2I 225 - 55 × 400** 200 L	4	90,3
	19,7	120 500	2,12	**MR C2I 250 - 55 × 400** 200 L	4	89
	19,5	121 400	2,8	**MR C2I 280 - 55 × 400** 200 L	4	89,7
	21,8	108 600	1,5	**MR C2I 225 - 55 × 400** 200 L	4	80,2
	22,2	106 700	2,24	**MR C2I 250 - 55 × 400** 200 L	4	78,8
	21,8	108 700	3	**MR C2I 280 - 55 × 400** 200 L	4	80,3
	24,9	95 250	1,32	**MR C2I 200 - 55 × 400** 200 L	4	70,3
	24,2	97 800	1,6	**MR C2I 225 - 55 × 400** 200 L	4	72,2
	24,6	96 400	2,65	**MR C2I 250 - 55 × 400** 200 L	4	71,2
	24,4	97 150	3,35	**MR C2I 280 - 55 × 400** 200 L	4	71,7
	27,8	85 200	1,12	**MR ICI 200 - 55 × 400** 200 L	4	62,9
	27,3	86 900	1,4	**MR C2I 200 - 55 × 400** 200 L	4	64,2
	27,7	85 600	1,9	**MR C2I 225 - 55 × 400** 200 L	4	63,2
	28,2	84 100	2,8	**MR C2I 250 - 55 × 400** 200 L	4	62,1
	31,6	75 100	1,7	**MR C2I 200 - 55 × 400** 200 L	4	55,5
	30,7	77 100	2	**MR C2I 225 - 55 × 400** 200 L	4	56,9
	31,2	76 000	3,15	**MR C2I 250 - 55 × 400** 200 L	4	56,1
	33,4	70 950	1,12	**MR C2I 180 - 48 × 350** 200 L	B5R 4	52,4
	35,5	66 650	1,4	**MR ICI 200 - 55 × 400** 200 L	4	49,2
	32,5	72 950	1,6	**MR C2I 200 - 55 × 400** 200 L	4	53,9
	33	71 850	2,12	**MR C2I 225 - 55 × 400** 200 L	4	53,1
	33,6	70 600	3,35	**MR C2I 250 - 55 × 400** 200 L	4	52,1
	36,2	66 800	2,24	**MR CI 250 - 60 × 450** 225 M	6	31,7
	38,5	61 500	1,32	**MR C2I 180 - 48 × 350** 200 L	B5R 4	45,4
	37,6	63 050	1,9	**MR C2I 200 - 55 × 400** 200 L	4	46,6
	36,6	64 750	2,5	**MR C2I 225 - 55 × 400** 200 L	4	47,8
	37,1	63 800	3,75	**MR C2I 250 - 55 × 400** 200 L	4	47,1
	41,2	58 750	2,24	**MR CI 250 - 60 × 450** 225 M	6	27,9
	43,1	54 950	1,12	**MR ICI 180 - 48 × 350** 200 L	B5R 4	40,6
	42,7	55 500	1,32	**MR C2I 180 - 48 × 350** 200 L	B5R 4	41
	44,4	53 350	1,9	**MR ICI 200 - 55 × 400** 200 L	4	39,4
	41,1	57 650	2	**MR C2I 200 - 55 × 400** 200 L	4	42,6
	46,7	51 800	1,7	**MR CI 200 - 60 × 450** 225 M	6	24,6
	42,3	56 050	2,8	**MR C2I 225 - 55 × 400** 200 L	4	41,4
	45,3	53 400	3,35	**MR CI 250 - 60 × 450** 225 M	6	25,4
	46,9	50 500	1,5	**MR C2I 180 - 48 × 350** 200 L	B5R 4	37,3
	49,6	47 800	2,36	**MR C2I 200 - 55 × 400** 200 L	4	35,3
	48,3	49 050	3,15	**MR C2I 225 - 55 × 400** 200 L	4	36,2

1) Powers valid for continuous duty S1; **increase possible** for duty cycles S2 ... S10 (see ch. 1 «General specifications»): in which case T_2 increases and fs decreases.
2) For complete designation when ordering see ch. 2.
* Mounting position **B5R** (see ch. 1.2).

13 - Bevel helical gearmotor selection tables

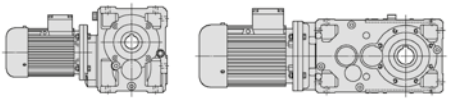

Motor power P_1 hp 1)	Output speed n_2 rpm	Output torque T_2 lb in	Service factor fs	2)		Gear ratio i
40	58,4	41 450	1,18	MR CI 160 - 60 × 450 225 M	6	19,7
	54,7	43 300	1,6	MR ICI 180 - 48 × 350 200 L BSR	4	32
	52	45 600	1,6	MR C2I 180 - 48 × 350 200 L BSR	4	33,7
	56,7	42 700	1,4	MR CI 180 - 60 × 450 225 M	6	20,3
	52,9	44 800	2,24	MR ICI 200 - 55 × 400 200 L	4	33,1
	54,2	43 700	2,65	MR C2I 200 - 55 × 400 200 L	4	32,3
	56,9	42 550	1,7	MR CI 200 - 55 × 400 200 L	4	30,8
	58,4	41 450	2,36	MR CI 200 - 60 × 450 225 M	6	19,7
	55,8	42 500	3,15	MR C2I 225 - 55 × 400 200 L	4	31,4
	56,7	42 700	2,8	MR CI 225 - 60 × 450 225 M	6	20,3
	63,9	37 900	1,32	MR CI 160 - 60 × 450 225 M	6	18
	59,2	40 050	2	MR C2I 180 - 48 × 350 200 L BSR	4	29,6
	61,6	39 300	1,6	MR CI 180 - 60 × 450 225 M	6	18,7
	62,6	37 900	3	MR C2I 200 - 55 × 400 200 L	4	28
	60,9	38 900	4	MR C2I 225 - 55 × 400 200 L	4	28,7
	71,1	34 050	1,25	MR CI 160 - 55 × 400 200 L	4	24,6
	66,8	35 500	1,7	MR ICI 180 - 48 × 350 200 L BSR	4	26,2
	65,6	36 150	2	MR C2I 180 - 48 × 350 200 L BSR	4	26,7
	71,9	33 650	1,9	MR CI 180 - 60 × 450 225 M	6	16
	67,1	35 300	3,15	MR ICI 200 - 55 × 400 200 L	4	26,1
	68,4	34 650	3,15	MR C2I 200 - 55 × 400 200 L	4	25,6
	71,1	34 050	2,5	MR CI 200 - 55 × 400 200 L	4	24,6
	70,3	33 700	4,25	MR C2I 225 - 55 × 400 200 L	4	24,9
	78,1	30 950	2,12	MR CI 180 - 60 × 450 225 M	6	14,7
	87,5	27 650	1,06	MR CI 140 - 48 × 350 200 L BSR	4	20
	88,9	27 250	1,6	MR CI 160 - 55 × 400 200 L	4	19,7
	86,3	28 050	2,12	MR CI 180 - 55 × 400 200 L	4	20,3
	84,9	27 900	3,35	MR ICI 200 - 55 × 400 200 L	4	20,6
	88,9	27 250	3,35	MR CI 200 - 55 × 400 200 L	4	19,7
	97,2	24 900	1,18	MR CI 140 - 48 × 350 200 L BSR	4	18
	97,2	24 900	1,9	MR CI 160 - 55 × 400 200 L	4	18
	93,8	25 800	2,5	MR CI 180 - 55 × 400 200 L	4	18,7
	97,2	24 900	3,75	MR CI 200 - 55 × 400 200 L	4	18
	111	21 800	1,32	MR CI 140 - 48 × 350 200 L BSR	4	15,8
	106	22 850	1,9	MR CI 160 - 55 × 400 200 L	4	16,5
	109	22 100	2,8	MR CI 180 - 55 × 400 200 L	4	16
	123	19 650	1,6	MR CI 140 - 48 × 350 200 L BSR	4	14,2
	123	19 650	2,5	MR CI 160 - 55 × 400 200 L	4	14,2
	119	20 350	3,15	MR CI 180 - 55 × 400 200 L	4	14,7
	136	17 800	1,6	MR CI 140 - 48 × 350 200 L BSR	4	12,9
	134	18 050	2,65	MR CI 160 - 55 × 400 200 L	4	13
	152	15 900	1,6	MR CI 140 - 48 × 350 200 L BSR	4	11,5
	153	15 750	2,65	MR CI 160 - 55 × 400 200 L	4	11,4
	178	13 650	1,6	MR CI 140 - 48 × 350 200 L BSR	4	9,86
	177	13 650	2,65	MR CI 160 - 55 × 400 200 L	4	9,88
	227	10 650	2,65	MR CI 160 - 55 × 400 200 L	4	7,71
	284	8 520	2,65	MR CI 160 - 55 × 400 200 L	4	6,16
50	7,15	414 500	1,6	MR C2I 360 - 65 × 550 250 M	6	161
	8,91	332 400	1,4	MR C2I 320 - 65 × 550 250 M	6	129
	8,91	332 400	1,8	MR C2I 321 - 65 × 550 250 M	6	129
	9,06	326 900	2	MR C2I 360 - 65 × 550 250 M	6	127
	11,5	258 500	1,32	MR C2I 280 - 65 × 550 250 M	6	100
	11,2	264 400	1,4	MR C2I 320 - 60 × 450 225 S	4	156
	11,2	264 400	1,7	MR C2I 321 - 60 × 450 225 S	4	156
	11,1	265 900	1,7	MR C2I 320 - 65 × 550 250 M	6	103
	11,1	265 900	2,12	MR C2I 321 - 65 × 550 250 M	6	103
	10,9	272 400	2,36	MR C2I 360 - 60 × 450 225 S	4	161
	11,3	261 500	2,65	MR C2I 360 - 65 × 550 250 M	6	102
	12,8	231 000	1,5	MR C2I 280 - 65 × 550 250 M	6	89,7
	14,2	208 300	1,18	MR C2I 250 - 60 × 450 225 S	4	123
	14	212 300	1,5	MR C2I 280 - 60 × 450 225 S	4	125
	14,3	206 800	1,6	MR C2I 280 - 65 × 550 250 M	6	80,3
	13,6	218 400	2	MR C2I 320 - 60 × 450 225 S	4	129
	13,6	218 400	2,5	MR C2I 321 - 60 × 450 225 S	4	129
	13,8	214 800	3	MR C2I 360 - 60 × 450 225 S	4	127

Motor power P_1 hp 1)	Output speed n_2 rpm	Output torque T_2 lb in	Service factor fs	2)		Gear ratio i
50	17,8	166 700	1,5	MR C2I 250 - 60 × 450 225 S	4	98,5
	17,4	169 900	1,9	MR C2I 280 - 60 × 450 225 S	4	100
	17	174 700	2,36	MR C2I 320 - 60 × 450 225 S	4	103
	17	174 700	3	MR C2I 321 - 60 × 450 225 S	4	103
	19,4	152 800	1,06	MR C2I 225 - 60 × 450 225 S	4	90,3
	19,7	150 600	1,7	MR C2I 250 - 60 × 450 225 S	4	89
	19,5	151 800	2,24	MR C2I 280 - 60 × 450 225 S	4	89,7
	19,7	150 400	2,65	MR C2I 320 - 60 × 450 225 S	4	88,8
	21,8	135 700	1,25	MR C2I 225 - 60 × 450 225 S	4	80,2
	22,2	133 300	1,8	MR C2I 250 - 60 × 450 225 S	4	78,8
	21,8	135 900	2,36	MR C2I 280 - 60 × 450 225 S	4	80,3
	21,2	139 800	3	MR C2I 320 - 60 × 450 225 S	4	82,6
	24,2	122 200	1,32	MR C2I 225 - 60 × 450 225 S	4	72,2
	24,6	120 500	2	MR C2I 250 - 60 × 450 225 S	4	71,2
	24,4	121 400	2,8	MR C2I 280 - 60 × 450 225 S	4	71,7
	27,7	107 000	1,5	MR C2I 225 - 60 × 450 225 S	4	63,2
	28,2	105 100	2,24	MR C2I 250 - 60 × 450 225 S	4	62,1
	27,6	107 100	3	MR C2I 280 - 60 × 450 225 S	4	63,3
	31,6	93 850	1,32	MR C2I 200 - 60 × 450 225 S	4	55,5
	30,7	96 350	1,6	MR C2I 225 - 60 × 450 225 S	4	56,9
	31,2	95 000	2,65	MR C2I 250 - 60 × 450 225 S	4	56,1
	30,9	95 750	3,35	MR C2I 280 - 60 × 450 225 S	4	56,6
	35,5	83 350	1,12	MR ICI 200 - 60 × 450 225 S	4	49,2
	32,5	91 200	1,32	MR C2I 200 - 60 × 450 225 S	4	53,9
	33	89 850	1,7	MR C2I 225 - 60 × 450 225 S	4	53,1
	33,6	88 250	2,8	MR C2I 250 - 60 × 450 225 S	4	52,1
	36,2	83 450	1,8	MR CI 250 - 65 × 550 250 M	6	31,7
	32,9	89 950	3,35	MR C2I 280 - 60 × 450 225 S	4	53,1
	37,6	78 800	1,5	MR C2I 200 - 60 × 450 225 S	4	46,6
	36,6	80 900	2	MR C2I 225 - 60 × 450 225 S	4	47,8
	37,1	79 800	3	MR C2I 250 - 60 × 450 225 S	4	47,1
	41,2	73 450	1,8	MR CI 250 - 65 × 550 250 M	6	27,9
	44,4	66 650	1,5	MR ICI 200 - 60 × 450 225 S	4	39,4
	41,1	72 100	1,6	MR C2I 200 - 60 × 450 225 S	4	42,6
	46,7	64 750	1,32	MR CI 200 - 65 × 550 250 M	6	24,6
	42,3	70 100	2,24	MR C2I 225 - 60 × 450 225 S	4	41,4
	40,9	72 500	3,35	MR C2I 250 - 60 × 450 225 S	4	42,8
	45,3	66 800	2,65	MR CI 250 - 65 × 550 250 M	6	25,4
	49,6	59 750	1,9	MR C2I 200 - 60 × 450 225 S	4	35,3
	48,3	61 350	2,5	MR C2I 225 - 60 × 450 225 S	4	36,2
	47	63 050	3,55	MR C2I 250 - 60 × 450 225 S	4	37,2
	51,5	58 750	2,65	MR CI 250 - 65 × 550 250 M	6	22,3
	52,9	55 950	1,8	MR ICI 200 - 60 × 450 225 S	4	33,1
	54,2	54 650	2	MR C2I 200 - 60 × 450 225 S	4	32,3
	56,9	53 200	1,32	MR CI 200 - 60 × 450 225 S	4	30,8
	58,4	51 800	1,9	MR CI 200 - 65 × 550 250 M	6	19,7
	55,8	53 150	2,5	MR C2I 225 - 60 × 450 225 S	4	31,4
	56,7	53 350	2,24	MR CI 225 - 65 × 550 250 M	6	20,3
	51,7	57 300	4	MR C2I 250 - 60 × 450 225 S	4	33,9
	55,2	54 850	2,65	MR CI 250 - 60 × 450 225 S	4	31,7
	56,6	53 400	3,55	MR CI 250 - 65 × 550 250 M	6	20,3
	62,6	47 350	2,36	MR C2I 200 - 60 × 450 225 S	4	28
	60,9	48 600	3,15	MR C2I 225 - 60 × 450 225 S	4	28,7
	61,6	49 100	2,24	MR CI 225 - 65 × 550 250 M	6	18,7
	59,3	50 000	4,5	MR C2I 250 - 60 × 450 225 S	4	29,5
	62,7	48 250	2,65	MR CI 250 - 60 × 450 225 S	4	27,9
	67,1	44 150	2,5	MR ICI 200 - 60 × 450 225 S	4	26,1
	68,4	43 300	2,65	MR C2I 200 - 60 × 450 225 S	4	25,6
	71,1	42 550	2	MR CI 200 - 60 × 450 225 S	4	24,6
	70,3	42 100	3,35	MR C2I 225 - 60 × 450 225 S	4	24,9
	71,9	42 100	3	MR CI 225 - 65 × 550 250 M	6	16
	65,2	45 400	5	MR C2I 250 - 60 × 450 225 S	4	26,8
	68,9	43 900	3,75	MR CI 250 - 60 × 450 225 S	4	25,4

1) Powers valid for continuous duty S1; **increase possible** for duty cycles S2 ... S10 (see ch. 1 «General specifications»): in which case T_2 increases and fs decreases.
2) For complete designation when ordering see ch. 2.

13 - Bevel helical gearmotor selection tables

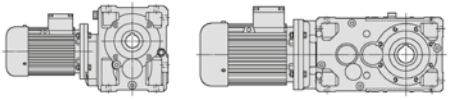

Motor power P_1 hp 1)	Output speed n_2 rpm	Output torque T_2 lb in	Service factor fs	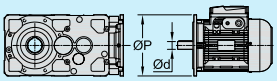 2)	Gear ratio i
50	**88,9**	34 050	1,32	**MR CI 160 - 60 × 450** 225 S 4	19,7
	86,3	35 050	1,7	**MR CI 180 - 60 × 450** 225 S 4	20,3
	84,9	34 900	2,65	**MR ICI 200 - 60 × 450** 225 S 4	20,6
	88,9	34 050	2,8	**MR CI 200 - 60 × 450** 225 S 4	19,7
	86,3	35 050	3,35	**MR CI 225 - 60 × 450** 225 S 4	20,3
	97,2	31 100	1,5	**MR CI 160 - 60 × 450** 225 S 4	18
	93,8	32 250	1,9	**MR CI 180 - 60 × 450** 225 S 4	18,7
	97,2	31 100	3	**MR CI 200 - 60 × 450** 225 S 4	18
	106	28 600	1,5	**MR CI 160 - 60 × 450** 225 S 4	16,5
	109	27 650	2,24	**MR CI 180 - 60 × 450** 225 S 4	16
	106	28 600	3	**MR CI 200 - 60 × 450** 225 S 4	16,5
	123	24 550	2	**MR CI 160 - 60 × 450** 225 S 4	14,2
	119	25 450	2,5	**MR CI 180 - 60 × 450** 225 S 4	14,7
	123	24 550	4	**MR CI 200 - 60 × 450** 225 S 4	14,2
	134	22 550	2,12	**MR CI 160 - 60 × 450** 225 S 4	13
	134	22 650	2,5	**MR CI 180 - 60 × 450** 225 S 4	13,1
	134	22 550	4,25	**MR CI 200 - 60 × 450** 225 S 4	13
	153	19 700	2,12	**MR CI 160 - 60 × 450** 225 S 4	11,4
	154	19 650	2,5	**MR CI 180 - 60 × 450** 225 S 4	11,4
	155	19 450	4,25	**MR CI 200 - 60 × 450** 225 S 4	11,3
	177	17 100	2,12	**MR CI 160 - 60 × 450** 225 S 4	9,88
	171	17 700	2,5	**MR CI 180 - 60 × 450** 225 S 4	10,3
	170	17 800	4,25	**MR CI 200 - 60 × 450** 225 S 4	10,3
	227	13 350	2,12	**MR CI 160 - 60 × 450** 225 S 4	7,71
	217	13 950	4,25	**MR CI 200 - 60 × 450** 225 S 4	8,06
	284	10 650	2,12	**MR CI 160 - 60 × 450** 225 S 4	6,16
	271	11 150	4,25	**MR CI 200 - 60 × 450** 225 S 4	6,46
60	**7,15**	497 400	1,32	**MR C2I 360 - 75 × 550** 280 S 6	161
	8,91	398 900	1,5	**MR C2I 321 - 75 × 550** 280 S 6	129
	9,06	392 300	1,7	**MR C2I 360 - 75 × 550** 280 S 6	127
	11,2	317 300	1,18	**MR C2I 320 - 60 × 450** 225 M 4	156
	11,2	317 300	1,4	**MR C2I 321 - 60 × 450** 225 M 4	156
	11,1	319 100	1,4	**MR C2I 320 - 75 × 550** 280 S 6	103
	11,1	319 100	1,8	**MR C2I 321 - 75 × 550** 280 S 6	103
	10,9	326 900	2	**MR C2I 360 - 60 × 450** 225 M 4	161
	11,3	313 900	2,24	**MR C2I 360 - 75 × 550** 280 S 6	102
	12,8	277 200	1,25	**MR C2I 280 - 75 × 550** 280 S 6	89,7
	12,9	274 600	1,5	**MR C2I 320 - 75 × 550** 280 S 6	88,8
	14	254 800	1,25	**MR C2I 280 - 60 × 450** 225 M 4	125
	14,3	248 200	1,32	**MR C2I 280 - 75 × 550** 280 S 6	80,3
	13,6	262 100	1,7	**MR C2I 320 - 60 × 450** 225 M 4	129
	13,6	262 100	2,12	**MR C2I 321 - 60 × 450** 225 M 4	129
	13,8	257 800	2,5	**MR C2I 360 - 60 × 450** 225 M 4	127
	17,8	200 000	1,25	**MR C2I 250 - 60 × 450** 225 M 4	98,5
	17,4	203 800	1,6	**MR C2I 280 - 60 × 450** 225 M 4	100
	17	209 700	2	**MR C2I 320 - 60 × 450** 225 M 4	103
	17	209 700	2,5	**MR C2I 321 - 60 × 450** 225 M 4	103
	17,2	206 200	3,15	**MR C2I 360 - 60 × 450** 225 M 4	102
	19,7	180 800	1,4	**MR C2I 250 - 60 × 450** 225 M 4	89
	19,5	182 100	1,9	**MR C2I 280 - 60 × 450** 225 M 4	89,7
	19,7	180 500	2,24	**MR C2I 320 - 60 × 450** 225 M 4	88,8
	19,7	180 500	2,8	**MR C2I 321 - 60 × 450** 225 M 4	88,8
	22,2	160 000	1,5	**MR C2I 250 - 60 × 450** 225 M 4	78,8
	21,8	163 100	1,9	**MR C2I 280 - 60 × 450** 225 M 4	80,3
	21,2	167 700	2,5	**MR C2I 320 - 60 × 450** 225 M 4	82,6
	21,2	167 700	3,15	**MR C2I 321 - 60 × 450** 225 M 4	82,6
	24,2	146 700	1,06	**MR C2I 225 - 60 × 450** 225 M 4	72,2
	24,6	144 600	1,7	**MR C2I 250 - 60 × 450** 225 M 4	71,2
	24,4	145 700	2,24	**MR C2I 280 - 60 × 450** 225 M 4	71,7
	24,6	144 400	2,8	**MR C2I 320 - 60 × 450** 225 M 4	71,1
	27,7	128 400	1,25	**MR C2I 225 - 60 × 450** 225 M 4	63,2
	28,2	126 200	1,9	**MR C2I 250 - 60 × 450** 225 M 4	62,1
	27,6	128 600	2,5	**MR C2I 280 - 60 × 450** 225 M 4	63,3
	26,9	132 300	3,15	**MR C2I 320 - 60 × 450** 225 M 4	65,1

Motor power P_1 hp 1)	Output speed n_2 rpm	Output torque T_2 lb in	Service factor fs	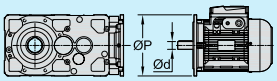 2)	Gear ratio i
60	**30,7**	115 600	1,4	**MR C2I 225 - 60 × 450** 225 M 4	56,9
	31,2	114 000	2,12	**MR C2I 250 - 60 × 450** 225 M 4	56,1
	30,9	114 900	2,8	**MR C2I 280 - 60 × 450** 225 M 4	56,6
	33	107 800	1,4	**MR C2I 225 - 60 × 450** 225 M 4	53,1
	33,6	105 900	2,24	**MR C2I 250 - 60 × 450** 225 M 4	52,1
	36,2	100 200	1,5	**MR CI 250 - 75 × 550** 280 S 6	31,7
	32,9	108 000	2,8	**MR C2I 280 - 60 × 450** 225 M 4	53,1
	37,6	94 550	1,25	**MR C2I 200 - 60 × 450** 225 M 4	46,6
	36,6	97 100	1,6	**MR C2I 225 - 60 × 450** 225 M 4	47,8
	37,1	95 750	2,5	**MR C2I 250 - 60 × 450** 225 M 4	47,1
	41,2	88 150	1,5	**MR CI 250 - 75 × 550** 280 S 6	27,9
	36,9	96 450	3,15	**MR C2I 280 - 60 × 450** 225 M 4	47,5
	44,4	80 000	1,25	**MR ICI 200 - 60 × 450** 225 M 4	39,4
	41,1	86 500	1,32	**MR C2I 200 - 60 × 450** 225 M 4	42,6
	46,7	77 700	1,12	**MR CI 200 - 75 × 550** 280 S 6	24,6
	42,3	84 100	1,9	**MR C2I 225 - 60 × 450** 225 M 4	41,4
	40,9	87 000	2,8	**MR C2I 250 - 60 × 450** 225 M 4	42,8
	45,3	80 150	2,24	**MR CI 250 - 75 × 550** 280 S 6	25,4
	42,1	84 400	3,75	**MR C2I 280 - 60 × 450** 225 M 4	41,6
	49,6	71 700	1,6	**MR C2I 200 - 60 × 450** 225 M 4	35,3
	48,3	73 600	2,12	**MR C2I 225 - 60 × 450** 225 M 4	36,2
	47	75 650	3	**MR C2I 250 - 60 × 450** 225 M 4	37,2
	51,5	70 500	2,24	**MR CI 250 - 75 × 550** 280 S 6	22,3
	52,9	67 150	1,5	**MR ICI 200 - 60 × 450** 225 M 4	33,1
	54,2	65 550	1,7	**MR C2I 200 - 60 × 450** 225 M 4	32,3
	58,4	62 150	1,6	**MR CI 200 - 75 × 550** 280 S 6	19,7
	55,8	63 750	2,12	**MR C2I 225 - 60 × 450** 225 M 4	31,4
	56,7	64 050	1,9	**MR CI 225 - 75 × 550** 280 S 6	20,3
	51,7	68 750	3,35	**MR C2I 250 - 60 × 450** 225 M 4	33,9
	55,2	65 800	2,24	**MR CI 250 - 60 × 450** 225 M 4	31,7
	56,6	64 100	3	**MR CI 250 - 75 × 550** 280 S 6	20,3
	62,6	56 850	2	**MR C2I 200 - 60 × 450** 225 M 4	28
	63,9	56 800	1,7	**MR CI 200 - 75 × 550** 280 S 6	18
	60,9	58 350	2,65	**MR C2I 225 - 60 × 450** 225 M 4	28,7
	61,6	58 950	1,9	**MR CI 225 - 75 × 550** 280 S 6	18,7
	59,3	59 950	3,75	**MR C2I 250 - 60 × 450** 225 M 4	29,5
	62,7	57 900	2,24	**MR CI 250 - 60 × 450** 225 M 4	27,9
	64,4	56 400	3,35	**MR CI 250 - 75 × 550** 280 S 6	17,9
	58,8	60 450	5	**MR C2I 280 - 60 × 450** 225 M 4	29,8
	67,1	52 950	2,12	**MR ICI 200 - 60 × 450** 225 M 4	26,1
	68,4	52 000	2,12	**MR C2I 200 - 60 × 450** 225 M 4	25,6
	71,1	51 050	1,7	**MR CI 200 - 60 × 450** 225 M 4	24,6
	70,3	50 550	2,8	**MR C2I 225 - 60 × 450** 225 M 4	24,9
	71,9	50 500	2,5	**MR CI 225 - 75 × 550** 280 S 6	16
	65,2	54 500	4,25	**MR C2I 250 - 60 × 450** 225 M 4	26,8
	68,9	52 650	3,15	**MR CI 250 - 60 × 450** 225 M 4	25,4
	67,2	52 900	5,6	**MR C2I 280 - 60 × 450** 225 M 4	26
	78,1	46 450	2,8	**MR CI 225 - 75 × 550** 280 S 6	14,7
	78,4	46 350	3,15	**MR CI 250 - 60 × 450** 225 M 4	22,3
	88,9	40 850	1,12	**MR CI 160 - 60 × 450** 225 M 4	19,7
	86,3	42 100	1,4	**MR CI 180 - 60 × 450** 225 M 4	20,3
	84,9	41 850	2,24	**MR ICI 200 - 60 × 450** 225 M 4	20,6
	88,9	40 850	2,24	**MR CI 200 - 60 × 450** 225 M 4	19,7
	86,3	42 100	2,8	**MR CI 225 - 60 × 450** 225 M 4	20,3
	97,2	37 350	1,25	**MR CI 160 - 60 × 450** 225 M 4	18
	93,8	38 700	1,6	**MR CI 180 - 60 × 450** 225 M 4	18,7
	97,2	37 350	2,5	**MR CI 200 - 60 × 450** 225 M 4	18
	93,8	38 700	2,8	**MR CI 225 - 60 × 450** 225 M 4	18,7
	106	34 300	1,25	**MR CI 160 - 60 × 450** 225 M 4	16,5
	109	33 200	1,9	**MR CI 180 - 60 × 450** 225 M 4	16
	106	34 300	2,5	**MR CI 200 - 60 × 450** 225 M 4	16,5
	109	33 200	3,75	**MR CI 225 - 60 × 450** 225 M 4	16
	123	29 450	1,6	**MR CI 160 - 60 × 450** 225 M 4	14,2
	119	30 550	2,12	**MR CI 180 - 60 × 450** 225 M 4	14,7
	123	29 450	3,35	**MR CI 200 - 60 × 450** 225 M 4	14,2

1) Powers valid for continuous duty S1; **increase possible** for duty cycles S2 ... S10 (see ch. 1 «General specifications»): in which case T_2 increases and fs decreases.
2) For complete designation when ordering see ch. 2.
* Mounting position **B5R** (see ch. 1.2).

13 - Bevel helical gearmotor selection tables

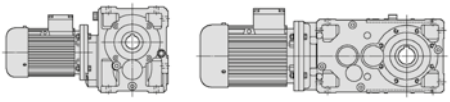

Motor power P_1 hp 1)	Output speed n_2 rpm	Output torque T_2 lb in	Service factor fs	2)		Gear ratio i
60	134	27 050	1,8	MR CI 160 - 60 × 450 225 M	4	13
	134	27 200	2,12	MR CI 180 - 60 × 450 225 M	4	13,1
	134	27 050	3,55	MR CI 200 - 60 × 450 225 M	4	13
	153	23 650	1,8	MR CI 160 - 60 × 450 225 M	4	11,4
	154	23 550	2,12	MR CI 180 - 60 × 450 225 M	4	11,4
	155	23 350	3,55	MR CI 200 - 60 × 450 225 M	4	11,3
	177	20 500	1,8	MR CI 160 - 60 × 450 225 M	4	9,88
	171	21 250	2,12	MR CI 180 - 60 × 450 225 M	4	10,3
	170	21 350	3,55	MR CI 200 - 60 × 450 225 M	4	10,3
	227	16 000	1,8	MR CI 160 - 60 × 450 225 M	4	7,71
	217	16 700	3,55	MR CI 200 - 60 × 450 225 M	4	8,06
	284	12 750	1,8	MR CI 160 - 60 × 450 225 M	4	6,16
	271	13 400	3,55	MR CI 200 - 60 × 450 225 M	4	6,46
75	10,9	408 600	1,6	MR C2I 360 - 65 × 550 250 M	4	161
	13,6	327 600	1,32	MR C2I 320 - 65 × 550 250 M	4	129
	13,6	327 600	1,7	MR C2I 321 - 65 × 550 250 M	4	129
	13,8	322 300	2	MR C2I 360 - 65 × 550 250 M	4	127
	17,4	254 800	1,25	MR C2I 280 - 65 × 550 250 M	4	100
	17	262 100	1,6	MR C2I 320 - 65 × 550 250 M	4	103
	17	262 100	2	MR C2I 321 - 65 × 550 250 M	4	103
	17,2	257 800	2,5	MR C2I 360 - 65 × 550 250 M	4	102
	19,5	227 700	1,5	MR C2I 280 - 65 × 550 250 M	4	89,7
	19,7	225 600	1,8	MR C2I 320 - 65 × 550 250 M	4	88,8
	19,7	225 600	2,24	MR C2I 321 - 65 × 550 250 M	4	88,8
	19,1	232 000	2,65	MR C2I 360 - 65 × 550 250 M	4	91,4
	22,2	200 000	1,18	MR C2I 250 - 65 × 550 250 M	4	78,8
	21,8	203 800	1,5	MR C2I 280 - 65 × 550 250 M	4	80,3
	21,2	209 700	2	MR C2I 320 - 65 × 550 250 M	4	82,6
	21,2	209 700	2,5	MR C2I 321 - 65 × 550 250 M	4	82,6
	21,5	206 200	3	MR C2I 360 - 65 × 550 250 M	4	81,2
	24,6	180 800	1,4	MR C2I 250 - 65 × 550 250 M	4	71,2
	24,4	182 100	1,8	MR C2I 280 - 65 × 550 250 M	4	71,7
	24,6	180 500	2,24	MR C2I 320 - 65 × 550 250 M	4	71,1
	24,6	180 500	2,8	MR C2I 321 - 65 × 550 250 M	4	71,1
	28,2	157 700	1,5	MR C2I 250 - 65 × 550 250 M	4	62,1
	27,6	160 700	1,9	MR C2I 280 - 65 × 550 250 M	4	63,3
	26,9	165 300	2,5	MR C2I 320 - 65 × 550 250 M	4	65,1
	26,9	165 300	3,15	MR C2I 321 - 65 × 550 250 M	4	65,1
	30,7	144 500	1,12	MR C2I 225 - 60 × 450 250 M	B5R 4	56,9
	31,2	142 500	1,7	MR C2I 250 - 65 × 550 250 M	4	56,1
	30,9	143 600	2,24	MR C2I 280 - 65 × 550 250 M	4	56,6
	31,2	142 300	2,8	MR C2I 320 - 65 × 550 250 M	4	56
	33	134 800	1,12	MR C2I 225 - 60 × 450 250 M	B5R 4	53,1
	33,6	132 400	1,8	MR C2I 250 - 65 × 550 250 M	4	52,1
	32,9	134 900	2,24	MR C2I 280 - 65 × 550 250 M	4	53,1
	34,1	130 300	3,15	MR C2I 320 - 65 × 550 250 M	4	51,3
	36,6	121 400	1,32	MR C2I 225 - 60 × 450 250 M	B5R 4	47,8
	37,1	119 700	2	MR C2I 250 - 65 × 550 250 M	4	47,1
	36,9	120 600	2,65	MR C2I 280 - 65 × 550 250 M	4	47,5
	39,6	112 100	3,55	MR C2I 320 - 65 × 550 250 M	4	44,2
	42,3	105 100	1,5	MR C2I 225 - 60 × 450 250 M	B5R 4	41,4
	40,9	108 800	2,24	MR C2I 250 - 65 × 550 250 M	4	42,8
	42,1	105 500	3	MR C2I 280 - 65 × 550 250 M	4	41,6
	48,3	92 000	1,7	MR C2I 225 - 60 × 450 250 M	B5R 4	36,2
	47	94 550	2,36	MR C2I 250 - 65 × 550 250 M	4	37,2
	46,6	95 300	3,15	MR C2I 280 - 65 × 550 250 M	4	37,5
	55,8	79 700	1,7	MR C2I 225 - 60 × 450 250 M	B5R 4	31,4
	51,7	85 950	2,65	MR C2I 250 - 65 × 550 250 M	4	33,9
	55,2	82 300	1,8	MR CI 250 - 65 × 550 250 M	4	31,7
	53,3	83 400	3,35	MR C2I 280 - 65 × 550 250 M	4	32,8
	60,9	72 950	2,12	MR C2I 225 - 60 × 450 250 M	B5R 4	28,7
	59,3	74 950	3	MR C2I 250 - 65 × 550 250 M	4	29,5
	62,7	72 400	1,8	MR CI 250 - 65 × 550 250 M	4	27,9
	58,8	75 550	4	MR C2I 280 - 65 × 550 250 M	4	29,8

Motor power P_1 hp 1)	Output speed n_2 rpm	Output torque T_2 lb in	Service factor fs	2)		Gear ratio i
75	71,1	63 850	1,32	MR CI 200 - 65 × 550 250 M	4	24,6
	70,3	63 200	2,24	MR C2I 225 - 60 × 450 250 M	B5R 4	24,9
	65,2	68 150	3,35	MR C2I 250 - 65 × 550 250 M	4	26,8
	68,9	65 800	2,5	MR CI 250 - 65 × 550 250 M	4	25,4
	67,2	66 100	4,5	MR C2I 280 - 65 × 550 250 M	4	26
	78,4	57 900	2,5	MR CI 250 - 65 × 550 250 M	4	22,3
	86,3	52 600	1,12	MR CI 180 - 60 × 450 250 M	B5R 4	20,3
	88,9	51 050	1,8	MR CI 200 - 65 × 550 250 M	4	19,7
	86,3	52 600	2,24	MR CI 225 - 65 × 550 250 M	4	20,3
	86,2	52 650	3,55	MR CI 250 - 65 × 550 250 M	4	20,3
	93,8	48 400	1,32	MR CI 180 - 60 × 450 250 M	B5R 4	18,7
	97,2	46 650	2	MR CI 200 - 65 × 550 250 M	4	18
	93,8	48 400	2,24	MR CI 225 - 65 × 550 250 M	4	18,7
	97,9	46 350	4	MR CI 250 - 65 × 550 250 M	4	17,9
	109	41 450	1,5	MR CI 180 - 60 × 450 250 M	B5R 4	16
	106	42 850	2	MR CI 200 - 65 × 550 250 M	4	16,5
	109	41 450	3	MR CI 225 - 65 × 550 250 M	4	16
	119	38 150	1,7	MR CI 180 - 60 × 450 250 M	B5R 4	14,7
	123	36 800	2,65	MR CI 200 - 65 × 550 250 M	4	14,2
	134	33 950	1,7	MR CI 180 - 60 × 450 250 M	B5R 4	13,1
	134	33 800	3	MR CI 200 - 65 × 550 250 M	4	13
	154	29 450	1,7	MR CI 180 - 60 × 450 250 M	B5R 4	11,4
	155	29 200	3	MR CI 200 - 65 × 550 250 M	4	11,3
	171	26 600	1,7	MR CI 180 - 60 × 450 250 M	B5R 4	10,3
	170	26 700	3	MR CI 200 - 65 × 550 250 M	4	10,3
	217	20 900	3	MR CI 200 - 65 × 550 250 M	4	8,06
	271	16 750	3	MR CI 200 - 65 × 550 250 M	4	6,46
100	13,6	436 800	1,25	MR C2I 321 - 75 × 550 280 S	4	129
	13,8	429 700	1,5	MR C2I 360 - 75 × 550 280 S	4	127
	17	349 500	1,18	MR C2I 320 - 75 × 550 280 S	4	103
	17	349 500	1,5	MR C2I 321 - 75 × 550 280 S	4	103
	17,2	343 700	1,9	MR C2I 360 - 75 × 550 280 S	4	102
	19,7	300 800	1,32	MR C2I 320 - 75 × 550 280 S	4	88,8
	19,7	300 800	1,7	MR C2I 321 - 75 × 550 280 S	4	88,8
	19,1	309 400	2	MR C2I 360 - 75 × 550 280 S	4	91,4
	21,8	271 800	1,18	MR C2I 280 - 75 × 550 280 S	4	80,3
	21,2	279 600	1,5	MR C2I 320 - 75 × 550 280 S	4	82,6
	21,2	279 600	1,9	MR C2I 321 - 75 × 550 280 S	4	82,6
	21,5	275 000	2,24	MR C2I 360 - 75 × 550 280 S	4	81,2
	24,4	242 900	1,4	MR C2I 280 - 75 × 550 280 S	4	71,7
	24,6	240 600	1,7	MR C2I 320 - 75 × 550 280 S	4	71,1
	24,6	240 600	2	MR C2I 321 - 75 × 550 280 S	4	71,1
	23,9	247 500	2,5	MR C2I 360 - 75 × 550 280 S	4	73,1
	28,2	210 300	1,12	MR C2I 250 - 75 × 550 280 S	4	62,1
	27,6	214 300	1,5	MR C2I 280 - 75 × 550 280 S	4	63,3
	26,9	220 400	1,9	MR C2I 320 - 75 × 550 280 S	4	65,1
	26,9	220 400	2,36	MR C2I 321 - 75 × 550 280 S	4	65,1
	27,3	216 800	2,8	MR C2I 360 - 75 × 550 280 S	4	64
	31,2	190 000	1,32	MR C2I 250 - 75 × 550 280 S	4	56,1
	30,9	191 500	1,7	MR C2I 280 - 75 × 550 280 S	4	56,6
	31,2	189 700	2,12	MR C2I 320 - 75 × 550 280 S	4	56
	31,2	189 700	2,65	MR C2I 321 - 75 × 550 280 S	4	56
	30,4	195 100	3,15	MR C2I 360 - 75 × 550 280 S	4	57,6
	33,6	176 500	1,4	MR C2I 250 - 75 × 550 280 S	4	52,1
	32,9	179 900	1,7	MR C2I 280 - 75 × 550 280 S	4	53,1
	34,1	173 700	2,36	MR C2I 320 - 75 × 550 280 S	4	51,3
	34,1	173 700	2,8	MR C2I 321 - 75 × 550 280 S	4	51,3
	34,7	170 800	3,55	MR C2I 360 - 75 × 550 280 S	4	50,5
	37,1	159 600	1,5	MR C2I 250 - 75 × 550 280 S	4	47,1
	36,9	160 800	1,9	MR C2I 280 - 75 × 550 280 S	4	47,5
	39,6	149 500	2,65	MR C2I 320 - 75 × 550 280 S	4	44,2
	40,9	145 000	1,7	MR C2I 250 - 75 × 550 280 S	4	42,8
	42,1	140 700	2,24	MR C2I 280 - 75 × 550 280 S	4	41,6
	44,3	133 800	3	MR C2I 320 - 75 × 550 280 S	4	39,5

1) Powers valid for continuous duty S1; **increase possible** for duty cycles S2 ... S10 (see ch. 1 «General specifications»): in which case T_2 increases and fs decreases.
2) For complete designation when ordering see ch. 2.
* Mounting position **B5R** (see ch. 1.2).

13 - Bevel helical gearmotor selection tables

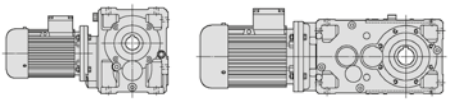

Motor power P_1 hp 1)	Output speed n_2 rpm	Output torque T_2 lb in	Service factor fs	2)		Gear ratio i
100	47	126 100	1,8	MR C2I 250 - 75 × 550 280 S	4	37,2
	46,6	127 100	2,36	MR C2I 280 - 75 × 550 280 S	4	37,5
	48,3	122 800	3,15	MR C2I 320 - 75 × 550 280 S	4	36,3
	51,7	114 600	2	MR C2I 250 - 75 × 550 280 S	4	33,9
	55,2	109 700	1,32	MR CI 250 - 75 × 550 280 S	4	31,7
	53,3	111 200	2,5	MR C2I 280 - 75 × 550 280 S	4	32,8
	53,9	109 900	3,55	MR C2I 320 - 75 × 550 280 S	4	32,5
	59,3	99 950	2,24	MR C2I 250 - 75 × 550 280 S	4	29,5
	62,7	96 500	1,32	MR CI 250 - 75 × 550 280 S	4	27,9
	58,8	100 700	3,15	MR C2I 280 - 75 × 550 280 S	4	29,8
	60,9	97 350	4	MR C2I 320 - 75 × 550 280 S	4	28,8
	65,2	90 850	2,5	MR C2I 250 - 75 × 550 280 S	4	26,8
	68,9	87 750	1,9	MR CI 250 - 75 × 550 280 S	4	25,4
	67,2	88 150	3,35	MR C2I 280 - 75 × 550 280 S	4	26
	68	87 150	4,5	MR C2I 320 - 75 × 550 280 S	4	25,7
	78,4	77 200	1,9	MR CI 250 - 75 × 550 280 S	4	22,3
	88,9	68 100	1,4	MR CI 200 - 75 × 550 280 S	4	19,7
	86,3	70 150	1,7	MR CI 225 - 75 × 550 280 S	4	20,3
	86,2	70 200	2,65	MR CI 250 - 75 × 550 280 S	4	20,3
	87,5	69 150	3,35	MR CI 280 - 75 × 550 280 S	4	20
	97,2	62 250	1,5	MR CI 200 - 75 × 550 280 S	4	18
	93,8	64 550	1,7	MR CI 225 - 75 × 550 280 S	4	18,7
	97,9	61 750	3	MR CI 250 - 75 × 550 280 S	4	17,9
	106	57 150	1,5	MR CI 200 - 75 × 550 280 S	4	16,5
	109	55 300	2,24	MR CI 225 - 75 × 550 280 S	4	16
	109	55 300	3	MR CI 250 - 75 × 550 280 S	4	16
	123	49 050	2	MR CI 200 - 75 × 550 280 S	4	14,2
	119	50 900	2,5	MR CI 225 - 75 × 550 280 S	4	14,7
	134	45 050	2,12	MR CI 200 - 75 × 550 280 S	4	13
	136	44 400	2,5	MR CI 225 - 75 × 550 280 S	4	12,8
	155	38 950	2,12	MR CI 200 - 75 × 550 280 S	4	11,3
	151	40 000	2,5	MR CI 225 - 75 × 550 280 S	4	11,6
	170	35 600	2,12	MR CI 200 - 75 × 550 280 S	4	10,3
	175	34 650	2,5	MR CI 225 - 75 × 550 280 S	4	10
	217	27 850	2,12	MR CI 200 - 75 × 550 280 S	4	8,06
	271	22 350	2,12	MR CI 200 - 75 × 550 280 S	4	6,46
125	13,8	537 100	1,18	MR C2I 360 - 75 × 550 280 M	4	127
	17	436 800	1,18	MR C2I 321 - 75 × 550 280 M	4	103
	17,2	429 700	1,5	MR C2I 360 - 75 × 550 280 M	4	102
	19,7	376 000	1,06	MR C2I 320 - 75 × 550 280 M	4	88,8
	19,7	376 000	1,32	MR C2I 321 - 75 × 550 280 M	4	88,8
	19,1	386 700	1,6	MR C2I 360 - 75 × 550 280 M	4	91,4
	21,2	349 500	1,18	MR C2I 320 - 75 × 550 280 M	4	82,6
	21,2	349 500	1,5	MR C2I 321 - 75 × 550 280 M	4	82,6
	21,5	343 700	1,8	MR C2I 360 - 75 × 550 280 M	4	81,2
	24,4	303 600	1,12	MR C2I 280 - 75 × 550 280 M	4	71,7
	24,6	300 800	1,32	MR C2I 320 - 75 × 550 280 M	4	71,1
	24,6	300 800	1,6	MR C2I 321 - 75 × 550 280 M	4	71,1
	23,9	309 400	2	MR C2I 360 - 75 × 550 280 M	4	73,1
	27,6	267 900	1,18	MR C2I 280 - 75 × 550 280 M	4	63,3
	26,9	275 500	1,5	MR C2I 320 - 75 × 550 280 M	4	65,1
	26,9	275 500	1,9	MR C2I 321 - 75 × 550 280 M	4	65,1
	27,3	271 000	2,24	MR C2I 360 - 75 × 550 280 M	4	64
	30,9	239 400	1,4	MR C2I 280 - 75 × 550 280 M	4	56,6
	31,2	237 200	1,7	MR C2I 320 - 75 × 550 280 M	4	56
	31,2	237 200	2,12	MR C2I 321 - 75 × 550 280 M	4	56
	30,4	243 900	2,65	MR C2I 360 - 75 × 550 280 M	4	57,6
	33,6	220 700	1,06	MR C2I 250 - 75 × 550 280 M	4	52,1
	32,9	224 900	1,4	MR C2I 280 - 75 × 550 280 M	4	53,1
	34,1	217 100	1,9	MR C2I 320 - 75 × 550 280 M	4	51,3
	34,1	217 100	2,24	MR C2I 321 - 75 × 550 280 M	4	51,3
	34,7	213 500	2,8	MR C2I 360 - 75 × 550 280 M	4	50,5

Motor power P_1 hp 1)	Output speed n_2 rpm	Output torque T_2 lb in	Service factor fs	2)		Gear ratio i
125	37,1	199 400	1,25	MR C2I 250 - 75 × 550 280 M	4	47,1
	36,9	201 000	1,6	MR C2I 280 - 75 × 550 280 M	4	47,5
	39,6	186 800	2,12	MR C2I 320 - 75 × 550 280 M	4	44,2
	39,6	186 800	2,65	MR C2I 321 - 75 × 550 280 M	4	44,2
	38,5	192 200	3,35	MR C2I 360 - 75 × 550 280 M	4	45,4
	40,9	181 300	1,4	MR C2I 250 - 75 × 550 280 M	4	42,8
	42,1	175 800	1,8	MR C2I 280 - 75 × 550 280 M	4	41,6
	44,3	167 300	2,36	MR C2I 320 - 75 × 550 280 M	4	39,5
	44,3	167 300	3	MR C2I 321 - 75 × 550 280 M	4	39,5
	47	157 600	1,4	MR C2I 250 - 75 × 550 280 M	4	37,2
	46,6	158 800	1,9	MR C2I 280 - 75 × 550 280 M	4	37,5
	48,3	153 500	2,65	MR C2I 320 - 75 × 550 280 M	4	36,3
	51,7	143 200	1,6	MR C2I 250 - 75 × 550 280 M	4	33,9
	53,3	139 000	2	MR C2I 280 - 75 × 550 280 M	4	32,8
	53,9	137 400	2,8	MR C2I 320 - 75 × 550 280 M	4	32,5
	59,3	124 900	1,8	MR C2I 250 - 75 × 550 280 M	4	29,5
	58,8	125 900	2,5	MR C2I 280 - 75 × 550 280 M	4	29,8
	60,9	121 700	3,15	MR C2I 320 - 75 × 550 280 M	4	28,8
	65,2	113 600	2	MR C2I 250 - 75 × 550 280 M	4	26,8
	68,9	109 700	1,5	MR CI 250 - 75 × 550 280 M	4	25,4
	67,2	110 200	2,65	MR C2I 280 - 75 × 550 280 M	4	26
	68	108 900	3,55	MR C2I 320 - 75 × 550 280 M	4	25,7
	78,4	96 500	1,5	MR CI 250 - 75 × 550 280 M	4	22,3
	88,9	85 100	1,12	MR CI 200 - 75 × 550 280 M	4	19,7
	86,3	87 650	1,32	MR CI 225 - 75 × 550 280 M	4	20,3
	86,2	87 750	2,12	MR CI 250 - 75 × 550 280 M	4	20,3
	87,5	86 450	2,65	MR CI 280 - 75 × 550 280 M	4	20
	97,2	77 800	1,18	MR CI 200 - 75 × 550 280 M	4	18
	93,8	80 650	1,32	MR CI 225 - 75 × 550 280 M	4	18,7
	97,9	77 200	2,36	MR CI 250 - 75 × 550 280 M	4	17,9
	97,2	77 800	2,65	MR CI 280 - 75 × 550 280 M	4	18
	106	71 450	1,18	MR CI 200 - 75 × 550 280 M	4	16,5
	109	69 100	1,8	MR CI 225 - 75 × 550 280 M	4	16
	109	69 150	2,36	MR CI 250 - 75 × 550 280 M	4	16
	111	68 150	3,55	MR CI 280 - 75 × 550 280 M	4	15,8
	123	61 350	1,6	MR CI 200 - 75 × 550 280 M	4	14,2
	119	63 600	2	MR CI 225 - 75 × 550 280 M	4	14,7
	124	60 900	3,15	MR CI 250 - 75 × 550 280 M	4	14,1
	134	56 350	1,7	MR CI 200 - 75 × 550 280 M	4	13
	136	55 500	2	MR CI 225 - 75 × 550 280 M	4	12,8
	139	54 500	3,55	MR CI 250 - 75 × 550 280 M	4	12,6
	155	48 700	1,7	MR CI 200 - 75 × 550 280 M	4	11,3
	151	50 000	2	MR CI 225 - 75 × 550 280 M	4	11,6
	153	49 300	3,55	MR CI 250 - 75 × 550 280 M	4	11,4
	170	44 500	1,7	MR CI 200 - 75 × 550 280 M	4	10,3
	175	43 300	2	MR CI 225 - 75 × 550 280 M	4	10
	169	44 800	3,55	MR CI 250 - 75 × 550 280 M	4	10,4
	217	34 850	1,7	MR CI 200 - 75 × 550 280 M	4	8,06
	271	27 900	1,7	MR CI 200 - 75 × 550 280 M	4	6,46
150	17,2	515 600	1,25	MR C2I 360 - 80 × 660 315 S	4	102
	19,7	451 200	1,12	MR C2I 321 - 80 × 660 315 S	4	88,8
	19,1	464 100	1,32	MR C2I 360 - 80 × 660 315 S	4	91,4
	21,2	419 400	1,25	MR C2I 321 - 80 × 660 315 S	4	82,6
	21,5	412 500	1,5	MR C2I 360 - 80 × 660 315 S	4	81,2
	24,6	360 900	1,12	MR C2I 320 - 80 × 660 315 S	4	71,1
	24,6	360 900	1,4	MR C2I 321 - 80 × 660 315 S	4	71,1
	23,9	371 200	1,7	MR C2I 360 - 80 × 660 315 S	4	73,1
	26,9	330 700	1,25	MR C2I 320 - 80 × 660 315 S	4	65,1
	26,9	330 700	1,6	MR C2I 321 - 80 × 660 315 S	4	65,1
	27,3	325 200	1,9	MR C2I 360 - 80 × 660 315 S	4	64
	30,9	287 200	1,12	MR C2I 280 - 75 × 550 315 S	B5R 4	56,6
	31,2	284 600	1,4	MR C2I 320 - 80 × 660 315 S	4	56
	31,2	284 600	1,7	MR C2I 321 - 80 × 660 315 S	4	56
	30,4	292 700	2,12	MR C2I 360 - 80 × 660 315 S	4	57,6

1) Powers valid for continuous duty S1; **increase possible** for duty cycles S2 ... S10 (see ch. 1 «General specifications»): in which case T_2 increases and fs decreases.
2) For complete designation when ordering see ch. 2.
* Mounting position **B5R** (see ch. 1.2).

13 - Bevel helical gearmotor selection tables

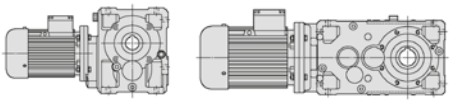

Motor power P_1 hp 1)	Output speed n_2 rpm	Output torque T_2 lb in	Service factor fs	2)		Gear ratio i
150	32,9	269 900	1,12	MR C2I 280 - 75 × 550 315 S	BSR 4	53,1
	34,1	260 500	1,6	MR C2I 320 - 80 × 660 315 S	4	51,3
	34,1	260 500	1,9	MR C2I 321 - 80 × 660 315 S	4	51,3
	34,7	256 200	2,36	MR C2I 360 - 80 × 660 315 S	4	50,5
	36,9	241 100	1,32	MR C2I 280 - 75 × 550 315 S	BSR 4	47,5
	39,6	224 200	1,8	MR C2I 320 - 80 × 660 315 S	4	44,2
	39,6	224 200	2,24	MR C2I 321 - 80 × 660 315 S	4	44,2
	38,5	230 600	2,65	MR C2I 360 - 80 × 660 315 S	4	45,4
	42,1	211 000	1,5	MR C2I 280 - 75 × 550 315 S	BSR 4	41,6
	44,3	200 700	2	MR C2I 320 - 80 × 660 315 S	4	39,5
	44,3	200 700	2,5	MR C2I 321 - 80 × 660 315 S	4	39,5
	42,7	208 200	3	MR C2I 360 - 80 × 660 315 S	4	41
	46,6	190 600	1,6	MR C2I 280 - 75 × 550 315 S	BSR 4	37,5
	48,3	184 200	2,12	MR C2I 320 - 80 × 660 315 S	4	36,3
	48,3	184 200	2,65	MR C2I 321 - 80 × 660 315 S	4	36,3
	46,9	189 400	3,15	MR C2I 360 - 80 × 660 315 S	4	37,3
	53,3	166 800	1,6	MR C2I 280 - 75 × 550 315 S	BSR 4	32,8
	53,9	164 900	2,36	MR C2I 320 - 80 × 660 315 S	4	32,5
	52	171 000	3,35	MR C2I 360 - 80 × 660 315 S	4	33,7
	58,8	151 100	2	MR C2I 280 - 75 × 550 315 S	BSR 4	29,8
	60,9	146 000	2,65	MR C2I 320 - 80 × 660 315 S	4	28,8
	60,9	146 000	3,35	MR C2I 321 - 80 × 660 315 S	4	28,8
	59,2	150 200	4,25	MR C2I 360 - 80 × 660 315 S	4	29,6
	68,9	131 600	1,25	MR CI 250 - 80 × 660 315 S	4	25,4
	67,2	132 200	2,24	MR C2I 280 - 75 × 550 315 S	BSR 4	26
	68	130 700	3	MR C2I 320 - 80 × 660 315 S	4	25,7
	68	130 700	3,75	MR C2I 321 - 80 × 660 315 S	4	25,7
	65,6	135 600	4,5	MR C2I 360 - 80 × 660 315 S	4	26,7
	78,4	115 800	1,25	MR CI 250 - 80 × 660 315 S	4	22,3
	86,3	105 200	1,12	MR CI 225 - 75 × 550 315 S	BSR 4	20,3
	86,2	105 300	1,7	MR CI 250 - 80 × 660 315 S	4	20,3
	87,5	103 700	2,24	MR CI 280 - 80 × 660 315 S	4	20
	93,8	96 800	1,12	MR CI 225 - 75 × 550 315 S	BSR 4	18,7
	97,9	92 650	2	MR CI 250 - 80 × 660 315 S	4	17,9
	97,2	93 350	2,24	MR CI 280 - 80 × 660 315 S	4	18
	109	82 950	1,5	MR CI 225 - 75 × 550 315 S	BSR 4	16
	109	83 000	2	MR CI 250 - 80 × 660 315 S	4	16
	111	81 800	3	MR CI 280 - 80 × 660 315 S	4	15,8
	119	76 350	1,6	MR CI 225 - 75 × 550 315 S	BSR 4	14,7
	124	73 050	2,65	MR CI 250 - 80 × 660 315 S	4	14,1
	136	66 600	1,6	MR CI 225 - 75 × 550 315 S	BSR 4	12,8
	139	65 400	3	MR CI 250 - 80 × 660 315 S	4	12,6
	151	59 950	1,6	MR CI 225 - 75 × 550 315 S	BSR 4	11,6
	153	59 150	3	MR CI 250 - 80 × 660 315 S	4	11,4
	175	51 950	1,6	MR CI 225 - 75 × 550 315 S	BSR 4	10
	169	53 750	3	MR CI 250 - 80 × 660 315 S	4	10,4
175	19,1	541 400	1,18	MR C2I 360 - 80 × 660 315 M	4	91,4
	21,5	481 200	1,25	MR C2I 360 - 80 × 660 315 M	4	81,2
	24,6	421 100	1,18	MR C2I 321 - 80 × 660 315 M	4	71,1
	23,9	433 100	1,5	MR C2I 360 - 80 × 660 315 M	4	73,1
	26,9	385 800	1,32	MR C2I 321 - 80 × 660 315 M	4	65,1
	27,3	379 400	1,6	MR C2I 360 - 80 × 660 315 M	4	64
	31,2	332 000	1,18	MR C2I 320 - 80 × 660 315 M	4	56
	31,2	332 000	1,5	MR C2I 321 - 80 × 660 315 M	4	56
	30,4	341 500	1,8	MR C2I 360 - 80 × 660 315 M	4	57,6
	34,1	303 900	1,4	MR C2I 320 - 80 × 660 315 M	4	51,3
	34,1	303 900	1,6	MR C2I 321 - 80 × 660 315 M	4	51,3
	34,7	299 000	2	MR C2I 360 - 80 × 660 315 M	4	50,5
	39,6	261 600	1,5	MR C2I 320 - 80 × 660 315 M	4	44,2
	39,6	261 600	1,9	MR C2I 321 - 80 × 660 315 M	4	44,2
	38,5	269 100	2,36	MR C2I 360 - 80 × 660 315 M	4	45,4
	44,3	234 200	1,7	MR C2I 320 - 80 × 660 315 M	4	39,5
	44,3	234 200	2,12	MR C2I 321 - 80 × 660 315 M	4	39,5
	42,7	242 900	2,65	MR C2I 360 - 80 × 660 315 M	4	41

Motor power P_1 hp 1)	Output speed n_2 rpm	Output torque T_2 lb in	Service factor fs	2)		Gear ratio i
175	48,3	214 900	1,8	MR C2I 320 - 80 × 660 315 M	4	36,3
	48,3	214 900	2,24	MR C2I 321 - 80 × 660 315 M	4	36,3
	46,9	221 000	2,8	MR C2I 360 - 80 × 660 315 M	4	37,3
	53,9	192 400	2	MR C2I 320 - 80 × 660 315 M	4	32,5
	53,9	192 400	2,5	MR C2I 321 - 80 × 660 315 M	4	32,5
	52	199 500	2,8	MR C2I 360 - 80 × 660 315 M	4	33,7
	60,9	170 300	2,36	MR C2I 320 - 80 × 660 315 M	4	28,8
	60,9	170 300	2,8	MR C2I 321 - 80 × 660 315 M	4	28,8
	59,2	175 200	3,55	MR C2I 360 - 80 × 660 315 M	4	29,6
	68,9	153 600	1,06	MR CI 250 - 80 × 660 315 M	4	25,4
	68	152 500	2,65	MR C2I 320 - 80 × 660 315 M	4	25,7
	68	152 500	3,15	MR C2I 321 - 80 × 660 315 M	4	25,7
	65,6	158 200	3,75	MR C2I 360 - 80 × 660 315 M	4	26,7
	78,4	135 100	1,06	MR CI 250 - 80 × 660 315 M	4	22,3
	86,2	122 900	1,5	MR CI 250 - 80 × 660 315 M	4	20,3
	87,5	121 000	1,9	MR CI 280 - 80 × 660 315 M	4	20
	97,9	108 100	1,7	MR CI 250 - 80 × 660 315 M	4	17,9
	97,2	108 900	1,9	MR CI 280 - 80 × 660 315 M	4	18
	109	96 800	1,7	MR CI 250 - 80 × 660 315 M	4	16
	111	95 400	2,65	MR CI 280 - 80 × 660 315 M	4	15,8
	124	85 250	2,36	MR CI 250 - 80 × 660 315 M	4	14,1
	123	85 850	2,8	MR CI 280 - 80 × 660 315 M	4	14,2
	139	76 350	2,5	MR CI 250 - 80 × 660 315 M	4	12,6
	136	77 800	2,8	MR CI 280 - 80 × 660 315 M	4	12,9
	153	69 000	2,5	MR CI 250 - 80 × 660 315 M	4	11,4
	152	69 500	2,8	MR CI 280 - 80 × 660 315 M	4	11,5
	169	62 700	2,5	MR CI 250 - 80 × 660 315 M	4	10,4
	174	60 800	2,8	MR CI 280 - 80 × 660 315 M	4	10,1
200	21,5	550 000	1,12	MR C2I 360 - 80 × 660 315 MC	4	81,2
	23,9	495 000	1,25	MR C2I 360 - 80 × 660 315 MC	4	73,1
	27,3	433 600	1,4	MR C2I 360 - 80 × 660 315 MC	4	64
	31,2	379 400	1,32	MR C2I 321 - 80 × 660 315 MC	4	56
	30,4	390 300	1,6	MR C2I 360 - 80 × 660 315 MC	4	57,6
	34,1	347 400	1,18	MR C2I 320 - 80 × 660 315 MC	4	51,3
	34,1	347 400	1,4	MR C2I 321 - 80 × 660 315 MC	4	51,3
	34,7	341 700	1,8	MR C2I 360 - 80 × 660 315 MC	4	50,5
	39,6	299 000	1,32	MR C2I 320 - 80 × 660 315 MC	4	44,2
	39,6	299 000	1,7	MR C2I 321 - 80 × 660 315 MC	4	44,2
	38,5	307 500	2	MR C2I 360 - 80 × 660 315 MC	4	45,4
	44,3	267 600	1,5	MR C2I 320 - 80 × 660 315 MC	4	39,5
	44,3	267 600	1,8	MR C2I 321 - 80 × 660 315 MC	4	39,5
	42,7	277 600	2,24	MR C2I 360 - 80 × 660 315 MC	4	41
	48,3	245 600	1,6	MR C2I 320 - 80 × 660 315 MC	4	36,3
	48,3	245 600	2	MR C2I 321 - 80 × 660 315 MC	4	36,3
	46,9	252 600	2,5	MR C2I 360 - 80 × 660 315 MC	4	37,3
	53,9	219 800	1,8	MR C2I 320 - 80 × 660 315 MC	4	32,5
	53,9	219 800	2,12	MR C2I 321 - 80 × 660 315 MC	4	32,5
	52	228 000	2,5	MR C2I 360 - 80 × 660 315 MC	4	33,7
	60,9	194 700	2	MR C2I 320 - 80 × 660 315 MC	4	28,8
	60,9	194 700	2,5	MR C2I 321 - 80 × 660 315 MC	4	28,8
	59,2	200 200	3,15	MR C2I 360 - 80 × 660 315 MC	4	29,6
	68	174 300	2,24	MR C2I 320 - 80 × 660 315 MC	4	25,7
	68	174 300	2,8	MR C2I 321 - 80 × 660 315 MC	4	25,7
	65,6	180 800	3,35	MR C2I 360 - 80 × 660 315 MC	4	26,7
	87,5	138 300	1,7	MR CI 280 - 80 × 660 315 MC	4	20
	97,2	124 500	1,7	MR CI 280 - 80 × 660 315 MC	4	18
	111	109 000	2,24	MR CI 280 - 80 × 660 315 MC	4	15,8
	123	98 150	2,5	MR CI 280 - 80 × 660 315 MC	4	14,2
	136	88 900	2,5	MR CI 280 - 80 × 660 315 MC	4	12,9
	152	79 450	2,5	MR CI 280 - 80 × 660 315 MC	4	11,5
	174	69 500	2,5	MR CI 280 - 80 × 660 315 MC	4	10,1

1) Powers valid for continuous duty S1; **increase possible** for duty cycles S2 ... S10 (see ch. 1 «General specifications»): in which case T_2 increases and fs decreases.
2) For complete designation when ordering see ch. 2.

This page is intentionally left blank.

14 – Dimensions, designs, mounting positions of bevel helical gearmotors

14.1 - Gearmotors MR CI 278

Dimensions 278
Designs (direction of rotation) 280
Mounting positions 281
Lubrication details 282

14.2 - Gearmotors MR ICI 283

Dimensions 283
Designs (direction of rotation) 284
Mounting positions 284
Lubrication details 285

14.3 - Gearmotors MR C3I 286

Dimensions 286
Designs (direction of rotation) 286
Mounting positions 287
Lubrication details 288

14.4 - Gearmotors MR C2I 289

Dimensions 289
Designs (direction of rotation) 290
Mounting positions 291
Lubrication details 292

Important note.

In the following pages, the gearmotor weight and dimensions X, Y, Y_2, W, W_1, W_2 are referred to the aluminium light alloy frame IEC electric motor of cat. TX11, up to motor size 132 included. For higher motor sizes these values are approximate and may vary according to the specific motor adopted; consult us, if need be.

The dimensions are expressed in mm

14.1 - Gearmotors MR CI

Dimensions

MR CI 40 ... 100

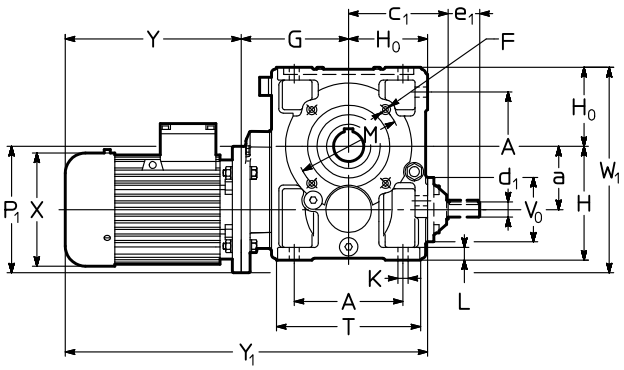

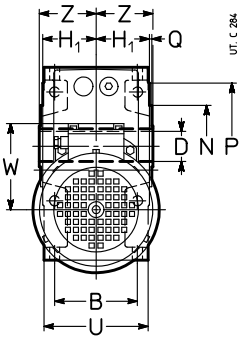

Red.	Mot.	a	A	c_1	D Ø	d_1 Ø	e_1	d_1 Ø	e_1	F	G	H	H_0	H_1	K	L	M Ø	N Ø h6	P Ø	Q	T	V_0 Ø	Z	P_1 Ø	X Ø ≈	Y ≈		Y_1 ≈		W ≈	W_1 ≈	lb	
	B5		B			$i_N \leq 12.5$		$i_N \geq 16$		1)											U						2)		2)				2)
40	**63**	41.5	73	74	19	11	23	11	23	M5	87	82	56	41.5	7	10	75	60	90	2.5	102	43	46	140	123	189	244	332	387	95	168	26	31
	71		65																		80			160	138	216	278	359	421	112	192	31	37
50	**63**	50	86	94	24	16	30	14	30	M6	98	100	67	49	9.5	12	85	70	105	2.5	120	78	53	140	123	189	244	354	409	95	187	35	40
	71		75																		95			160	138	216	278	381	443	112	197	40	46
	80																							200[3]	156	233	302	398	467	121	221	51	60
63	**71**	63	102	108	30	16	30	14	30	M8	118	125	80	58.5	11.5	14	100	80	120	3	143	78	63	160	138	216	278	414	476	112	223	51	57
64	**80**		90		**(63)**																114			200	156	233	302	431	500	121	243	62	71
	90				32																			200	176	287	366	485	564	141	243	75	88
	100[4]				**(64)**																			200	194	337	432	535	630	151	251	84	99
80	**80**	80	132	131	38	19	40	16	30	M10	138	150	100	69.5	14	17	130	110	160	3.5	180	86	75	200	156	233	302	471	540	121	280	86	95
81	**90**		106		**(80)**																135			200	176	287	366	525	604	141	280	99	112
	100[5]				40						150													250	194	310	405	558	653	151	305	108	123
	112[5]				**(81)**																			250	218	336	435	584	683	163	305	137	157
100	**90**	100	172	157	48	24	50	19	40	M12	170	180	125	84.5	16	20	165	130	200	3.5	228	104	90	200	176	287	366	582	661	141	325	143	157
	100		131																		165			250	194	310	405	605	700	151	350	152	168
	112																							250	218	336	435	631	730	163	350	181	201
	132[5]										190													300	257	445	553	760	868	194	375	258	284

1) Working length of thread 2 · F.
2) Values valid for brake motor.
3) On request and with price addition, dimension P_1 = 160: consult us.
4) Mounting position **B5R** (see ch. 1.2).
5) On request for 100LB 4, 112M 4 and 132M 4 also mounting position **B5R** (see ch. 1.2; dimensions Y and Y_2 increase by 27 mm, 26 mm and 35 mm, respectively).

MR CI 125 ... 280

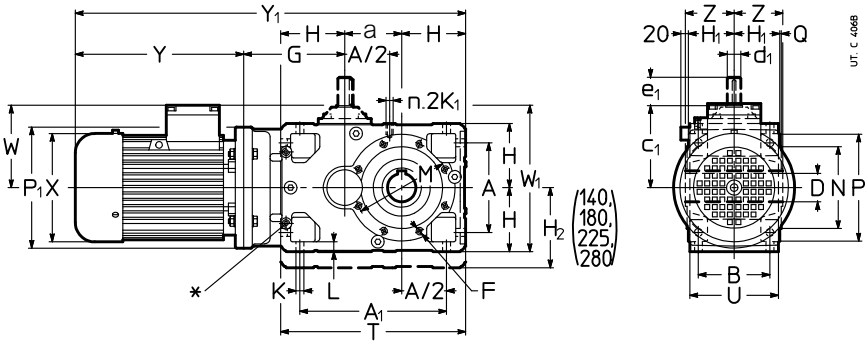

Red.	Mot. B5	a	A B	A_1	c_1	D Ø H7	d_1 Ø $i_N \leq 14$	e_1	d_1 Ø $i_N \geq 16$	e_1	F 1)	G	H h11	H_1 h12	H_2 h11	K Ø L	K_1 2)	M Ø	N Ø h6 Q	P Ø	T U	Z	P_1 Ø	X Ø ≈	Y ≈	Y ≈ 3)	Y_1 ≈	Y_1 ≈ 3)	W ≈	W_1 ≈	lb	lb 3)
125	**132**	125	212	337	188	60	28	60	24	50	4)	220	150	103.5	–	18	M12	215	180	250	425	110	300	257	445	553	940	1048	194	425	364	390
	160		162									250				23			4		201		350	315	539	640	1064	1165	241	450	465	476
	180																						350	354	613	734	1138	1259	278	453	595	573
							≤ 16		≥ 18																							
140	**132**	140	212	352	188	70	28	60	24	50	4)	220	150	103.5	180	18	M12	265	230	300	440	125	300	257	445	553	955	1063	194	470	392	419
	160		162									250				23			4		201		350	315	539	640	1079	1180	241	495	494	505
	180																						350	354	613	734	1153	1274	278	495	624	602
	2006)																						350	354	654	734	1194	1274	278	495	681	655
160	**160**	160	252	412	226	80	38	80	32	80	M16	282	180	128.5	–	22	M16	265	230	300	520	136	350	315	539	640	1161	1262	241	515	617	628
	180		201													28			4		249		350	354	613	734	1235	1356	278	515	747	725
	200																						400	354	654	734	1276	1356	278	540	805	778
	225											312											450	411	710	–	1362	–	298	565	1005	–
							≤ 16		≥ 18																							
180	**180**	180	252	432	226	90	38	80	32	80	M16	282	180	128.5	225	22	M16	300	250	350	540	150	350	354	613	734	1255	1376	278	580	798	776
	200		201													28			5		249		400	354	654	734	1296	1376	278	605	855	829
	225											312											450	411	710	–	1382	–	298	630	1056	–
	2506)																						450	411	710	–	1382	–	298	630	1107	–
200	**180**	200	320	520	282	100	48	110	38	80	4)	325	225	158	–	27	M20	350	300	400	650	167	350	354	613	734	1363	1484	278	600	1021	999
	200		250													34			5		307		400	354	654	734	1404	1484	278	625	1078	1052
	225											355											450	411	710	–	1490	–	298	650	1279	–
	250																						550	411	735	–	1515	–	298	700	1329	–
	280																						550	490	819	–	1599	–	360	700	1739	–
							≤ 16		≥ 18																							
225	**225**	225	320	545	282	110	48	110	38	80	M20	355	225	158	280	27	M20	400	350	450	675	180	450	411	710	–	1515	–	298	730	1371	–
	250		250													34			5		307		550	411	735	–	1540	–	298	780	1422	–
	280																						550	490	819	–	1624	–	360	780	1832	–
	3156)																						550	490	820	–	1625	–	360	780	1746	–
250	**225**	250	396	646	357	125	55	110	48	110	4)	410	280	195	–	33	M24	500	450	550	810	206	450	411	710	–	1650	–	298	755	1881	–
	250		310													42			5		380		550	411	735	–	1675	–	298	805	1799	–
	280																						550	490	819	–	1759	–	360	805	2218	–
	315											440											660	604	962	–	1932	–	445	860	2765	–
							≤ 16		≥ 18																							
280	**280**	280	396	676	357	140	55	110	48	110	M24	410	280	195	355	33	M24	500	450	550	840	222	550	490	819	–	1789	–	360	870	2379	–
	315		310									440				42			5		380		660	604	962	–	1962	–	445	925	2926	–

∗ Machined surface and N. 2 threaded holes (dimensions in ch. 6 «Gear reducer input face») on opposite side (not in view) too.
1) Working length of thread 2 · F.
2) Working length of thread 2 · K_1.
3) Values valid for brake motor.
4) For dimension, number and angular position see ch. 6.
6) Mounting position B5R (see ch. 1.2).

Designs[1] (direction of rotation)

MR CI 40 ... 100

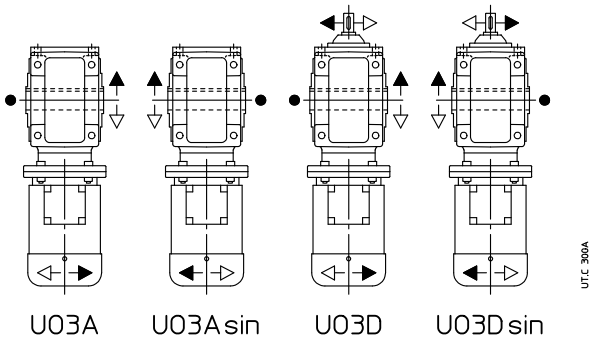

MR CI 125 ... 280

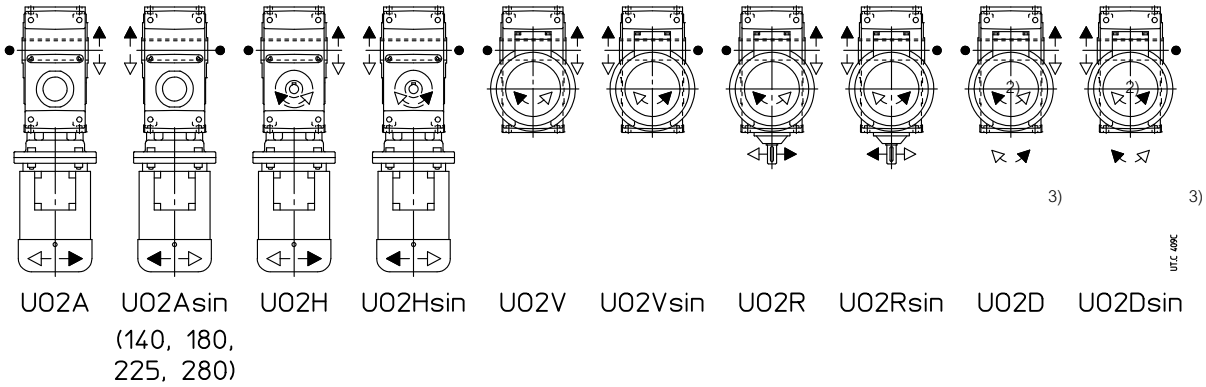

● Position of reference groove (see ch. 6) for radial load verification.
1) For motor design see ch. 2.
2) Direction of rotation of high speed shaft extension not in view.
3) Design **not possible** for sizes 140, 180, 225 and 280.

Mounting positions

Unless otherwise stated, gear reducers are supplied in mounting position **B3** (see ch. 2).

MR CI 40 ... 100

Designs:

UO3A
UO3Asin
UO3D
UO3Dsin

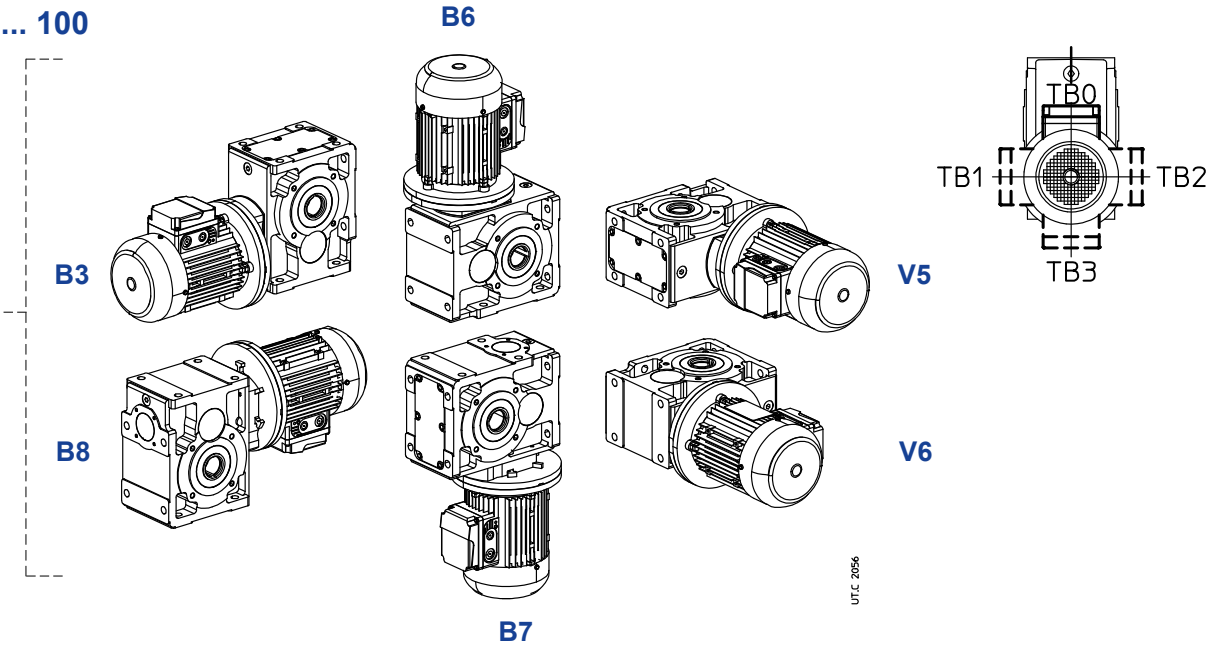

MR CI 125 ... 280

Designs:

(1)
UO2A
UO2Asin
UO2H
UO2Hsin

(2)
UO2V
UO2Vsin
UO2R
UO2R sin
UO2D
UO2Dsin

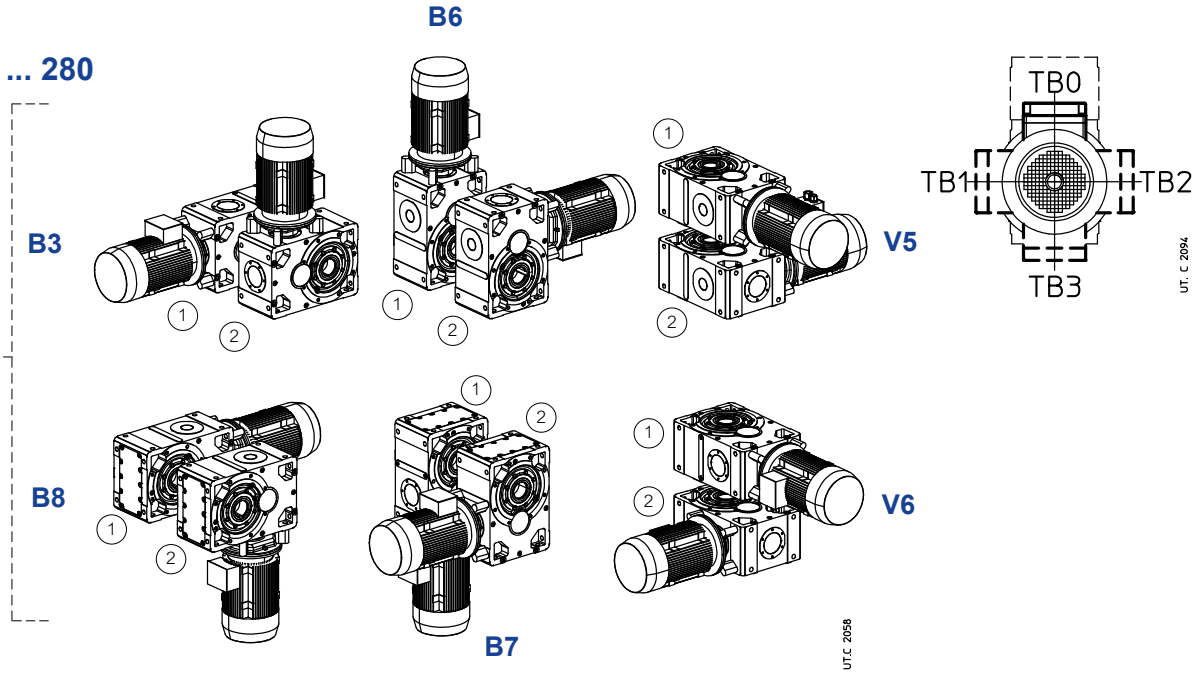

Oil quantity MR CI 40 ... 280

Lubricant quantities [gal] stated are approximate for provisioning. The exact oil quantity the gear reducer is to be filled with is defined by the level plug.

Mounting position	40	50	63, 64	80, 81	100	125	140	160	180	200	225	250	280
B3	0.07	0.11	0.21	0.34	0.69	1.4	2.2	2.8	4.3	5.4	8.3	11	16
B8	0.09	0.16	0.26	0.53	1	1.4	1.5	2.8	2.8	5.4	5.5	11	11
B6	0.07	0.11	0.21	0.34	0.77	1.8	2.3	3.6	4.5	7.1	8.8	14	17
B7	0.07	0.11	0.21	0.34	0.77	2	2.6	4	5	7.7	9.8	15	19
V5	0.08	0.12	0.25	0.48	0.92	2.4	2.7	4.6	5.3	9	10	18	20
V6	0.08	0.12	0.25	0.48	0.92	2.4	2.7	4.6	5.3	9	10	18	20

Lubrication details

MR CI 100

Designs:
UO3A
UO3Asin
UO3D
UO3Dsin

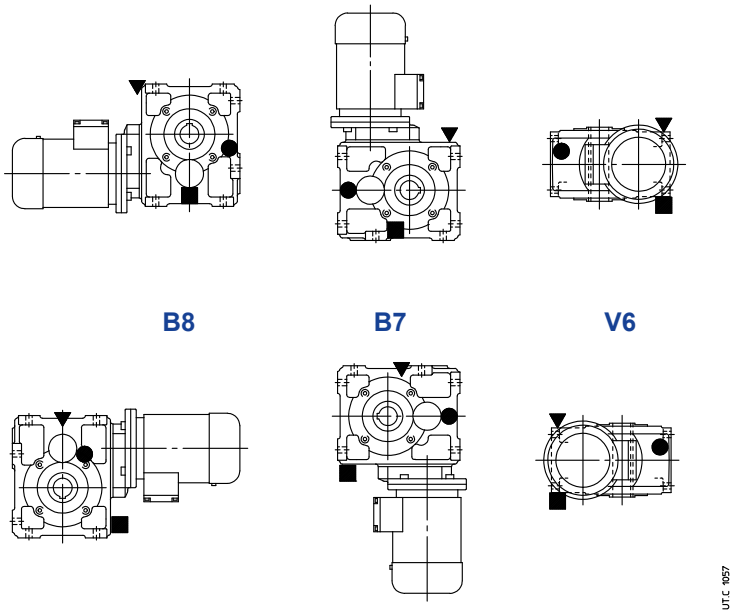

MR CI 125 ... 280

Designs:
(1)
UO2A
UO2Asin
UO2H
UO2Hsin
(2)
UO2V
UO2Vsin
UO2R
UO2R sin
UO2D
UO2D sin

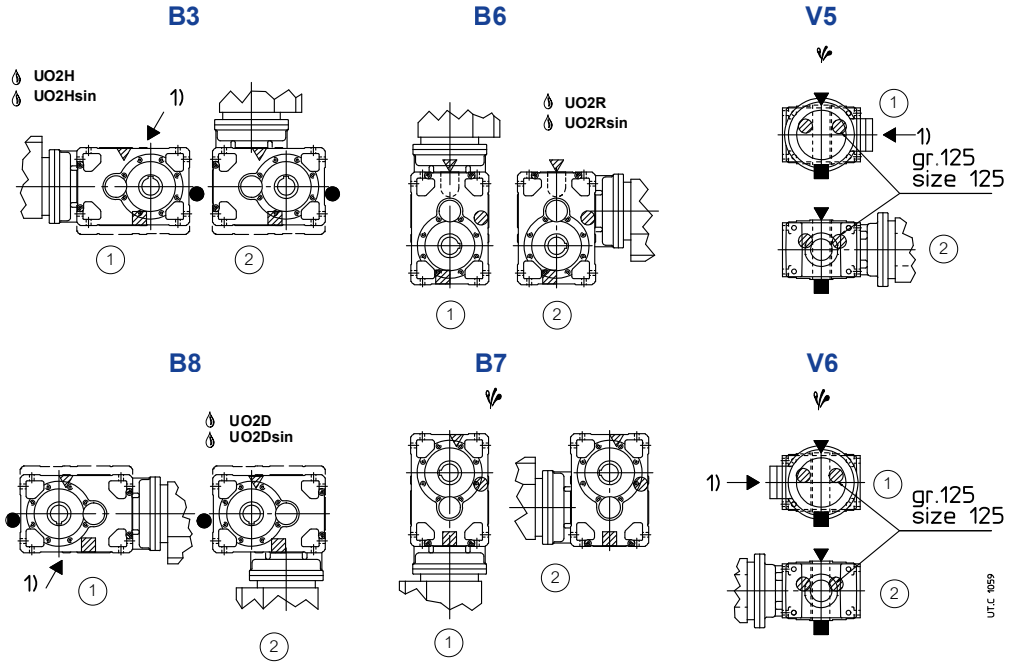

Possible high oil splash: for the corrective factor f_{t_3} of nominal thermal power P_{t_N} see ch. 4.
Possible bearing lubrication pump (see ch. 17 (19)).
1) Threaded hole position for mounting position individuation.

▼ oil filler plug
● oil level plug
■ oil drain plug

▽ oil filler plug on opposite side (not in view)
◍ oil level plug on opposite side (not in view)
▨ oil drain plug on opposite side (not in view)

14.2 - Gearmotors MR ICI

Dimensions

MR ICI 40 ... 200

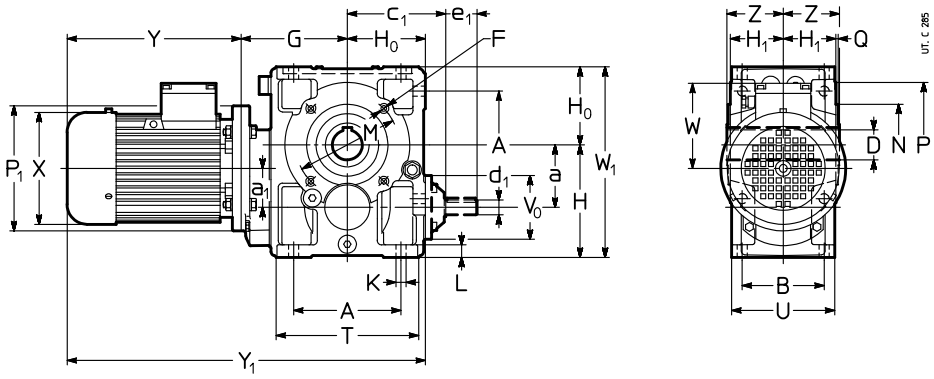

Red.	Mot.	a / a_1	A / B	c_1	D Ø H7	d_1 Ø / $i_N \leq 25$	e_1	d_1 Ø 8) / $i_N \geq 31.5$	e_1	F 1)	G	H h11	H_0 h11	H_1 h12	K Ø	L	M Ø	N Ø h6	P Ø	Q	T / U	V_0 Ø	Z	P_1 Ø	X Ø ≈	Y ≈	Y ≈ 2)	Y_1 ≈	Y_1 ≈ 2)	W ≈	W_1 ≈	lb	lb 2)
40	**63**	41.5	73	74	19	11	23	11	23	M5	87	82	56	41.5	7	10	75	60	90	2.5	102	43	46	140	123	189	244	332	387	95	176	26	31
	71	40	65																		80			160	138	216	278	359	421	112	193	31	37
50	**63**	50	86	94	24	16	30	14[5]	30[5]	M6	98	100	67	49	9.5	12	85	70	105	2.5	120	78	53	140	123	189	244	354	409	95	185	35	40
	71	40	75																		95			160	138	216	278	381	443	112	202	40	46
	80																							200[7]	156	233	302	398	467	121	221	51	60
63	**71**	63	102	108	30	16	30	14[5]	30[5]	M8	118	125	80	58.5	11.5	14	100	80	120	3	143	78	63	160	138	216	278	414	476	112	224	51	57
64	**80**	50	90		**(63)**																114			200	156	233	302	431	500	121	233	62	71
	90				32																			200	176	287	366	485	564	141	253	75	88
					(64)																												
80	**71**	80	132	131	38	19	40	16[5]	30[5]	M10	138	150	100	69.5	14	17	130	110	160	3.5	180	86	75	160	138	216	278	454	516	112	250	77	84
81	**80**	50	106		**(80)**																135			200	156	233	302	471	540	121	250	88	97
	90				40																			200	176	287	366	525	604	141	261	101	115
	100[6]				**(81)**																			200	194	337	432	575	670	151	271	110	126
100	**80**	100	172	157	48	24	50	19[5]	40[5]	M12	170	180	125	84.5	16	20	165	130	200	3.5	228	104	90	200	156	233	302	528	597	121	305	134	143
	90	62.5	131																		165			200	176	287	366	582	661	141	305	148	161
	100																							250	194	310	405	605	700	151	305	157	172
	112																							250	218	336	435	631	730	163	306	185	205
125	**90**	125	212	188	60	28	60	24[5]	50[5]	4)	205	225	150	103.5	18	23	215	180	250	4	274	122	110	200	176	287	366	642	721	141	375	234	247
	100	80	162																		201			250	194	310	405	665	760	151	375	243	258
	112																							250	218	336	435	691	790	163	375	271	291
	132																							300	257	445	553	800	908	194	375	348	375
140	**90**	140	212	188	70	28	60	24[5]	50[5]	4)	205	240	150	103.5	18	23	265	230	300	4	274	122	125	200	176	287	366	642	721	141	390	265	278
	100	80	162																		201			250	194	310	405	665	760	151	390	273	289
	112																							250	218	336	435	691	790	163	390	302	322
	132																							300	257	445	553	800	908	194	390	379	406
	160[6]																							300	315	539	640	894	995	241	421	474	485
160	**100**	160	252	226	80	38	80	32[5]	80[5]	4)	247	280	180	128.5	22	28	265	230	300	4	328	155	136	250	194	310	405	737	832	151	460	403	419
	112	100	201																		249			250	218	336	435	763	862	163	460	432	452
	132																							300	257	445	553	872	980	194	460	509	536
	160										260													350	315	539	640	979	1080	241	461	611	622
	180																							350	354	613	734	1053	1174	278	498	741	719
180	**112**	180	252	226	90	38	80	32[5]	80[5]	4)	247	300	180	128.5	22	28	300	250	350	5	328	155	150	250	218	336	435	763	862	163	480	485	505
	132	100	201																		249			300	257	445	553	872	980	194	480	562	589
	160										260													350	315	539	640	979	1080	241	480	664	675
	180																							350	354	613	734	1053	1174	278	498	794	772
	200[6]																							350	354	654	734	1094	1174	278	498	851	825
200	**132**	200	320	282	100	48	110	38[5]	80[5]	4)	305	355	225	158	27	34	350	300	400	5	410	190	167	300	257	445	553	975	1083	194	580	798	825
	160	125	250																		307			350	315	539	640	1069	1170	241	580	899	911
	180																							350	354	613	734	1143	1264	278	580	1030	1008
	200																							400	354	654	734	1184	1264	278	580	1087	1060
	225										315													450	411	710	–	1250	–	298	580	1287	–

1) Working length of thread 2 · F.
2) Values valid for brake motor.
4) For dimension, number and angular position, see ch. 6.
5) For the combined units – gear red. 50 with mot. 71, gear red. 63 ... 81 with mot. 80, gear red. 100 with mot. 90, gear red. 125 with mot. 100, 112, gear red. 140 with mot. 100, 112, 132, gear red. 160 with mot. 132, gear red. 180 with mot. 132 ... 180, gear red. 200 with mot. 160, 180 – having i_N = 31.5 (and i_N = 40 for gear red. 50 with mot. 63, for gear red. 140 with mot. 112 and for gear red. 180 with mot. 132) see column $i_N \leq 25$.
6) Mounting position **B5R** (see ch. 1.2).
7) On request and with price addition, dimension P_1 = 160: consult us.
8) For combined units with i_N final = 31.5 see column $i_N \leq 25$.

Designs[1] (direction of rotation)

MR ICI 40 ... 200

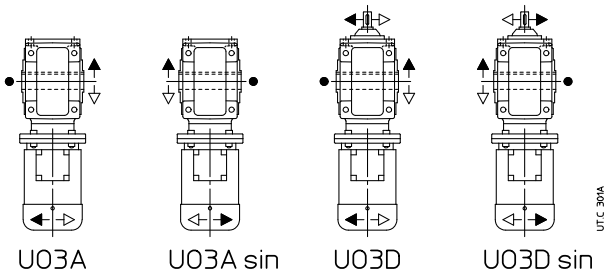

Mounting positions

Unless otherwise stated, gear reducers are supplied in mounting position **B3** (see ch. 2).

MR ICI 40 ... 200

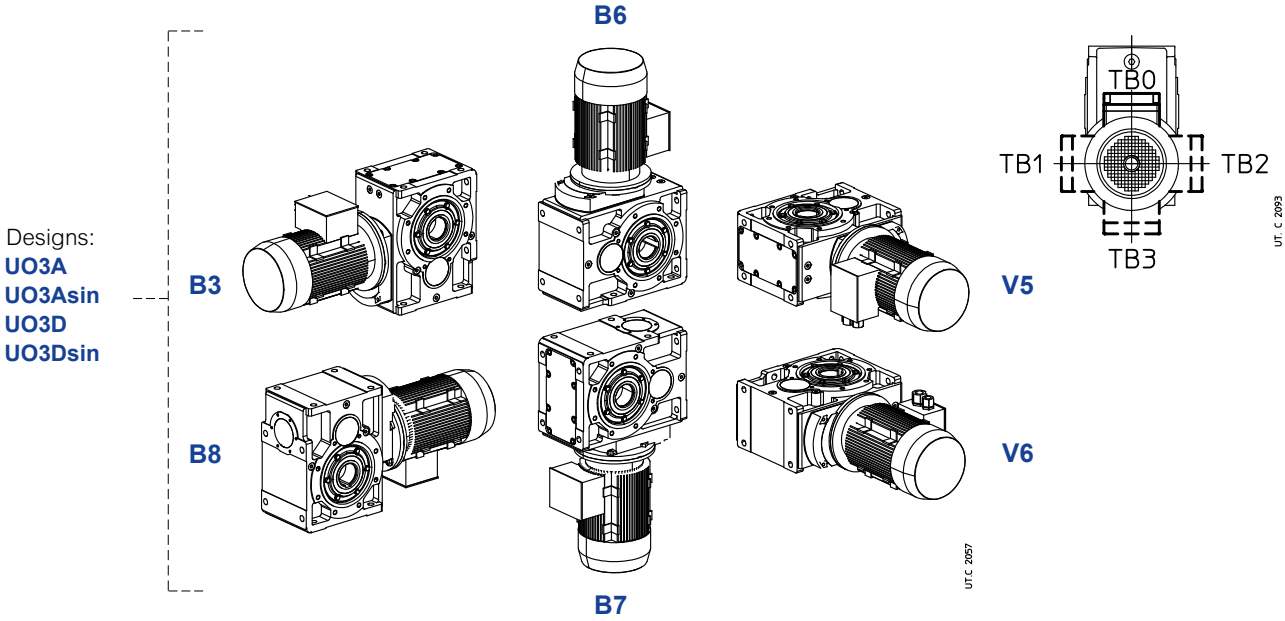

Oil quantity MR ICI 40 ... 200

Lubricant quantities [gal] stated are approximate for provisioning. The exact oil quantity the gear reducer is to be filled with is defined by the level plug.

Mounting position	40	50	63, 64	80, 81	100	125	140	160	180	200
B3	0.08	0.12	0.26	0.42	0.79	1.6	1.8	2.8	3.1	5.3
B8	0.09	0.17	0.32	0.58	1.1	2.4	2.8	4.2	5	7.9
B7	0.08	0.12	0.26	0.42	0.79	1.6	1.8	2.8	3.1	5.3
B6	0.13	0.21	0.42	0.71	1.5	3.1	3.6	5.5	6.6	11
V5	0.08	0.13	0.3	0.53	1	1.8	2.2	3.4	4	6.3
V6	0.08	0.13	0.3	0.53	1	1.8	2.2	3.4	4	6.3

● Position of reference groove (see ch. 6) for radial load verification.
1) For motor design see ch. 2.

Lubrication details

MR ICI 100 ... 200

Designs:
UO3A
UO3Asin
UO3D
UO3Dsin

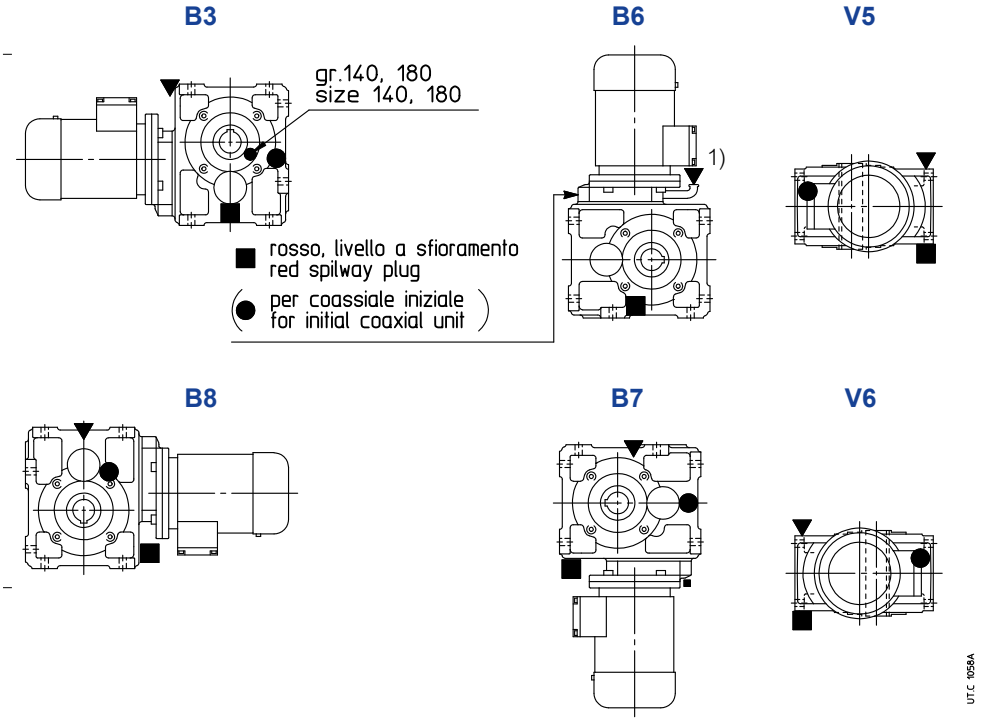

1) See also ch. 6 page 43.

▼ oil filler plug
● oil level plug
■ oil drain plug

▽ oil filler plug on opposite side (not in view)
◍ oil level plug on opposite side (not in view)
▨ oil drain plug on opposite side (not in view)

14.3 - Gearmotors MR C3I

Dimensions

MR C3I 50 ... 125

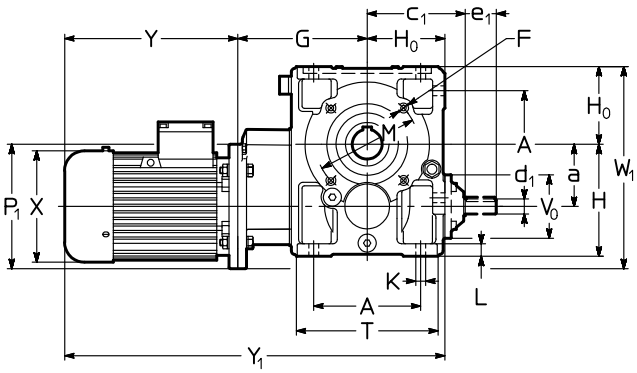

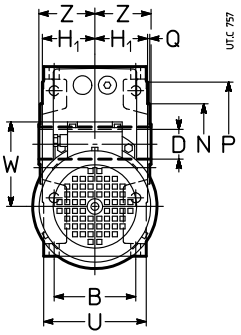

Red.	Mot.	a	A	c_1	D Ø H7	d_1 Ø	e_1	d_1 Ø	e_1	F	G	H h11	H_0 h11	H_1 h12	K	L	M Ø	N Ø h6	P Ø	Q	T	V_0 Ø	Z	P_1 Ø	X Ø ≈	Y ≈		Y_1 ≈		W ≈	W_1 ≈	ℓℓ lb	
	B5		B			$i_N \leqslant 125$		$i_N \geqslant 160$		1)											U					2)		2)				2)
50	63 71	50	86 75	94	24	16[3]	30[3]	14	30	M6	117	100	67	49	9,5	12	85	70	105	2,5	120 95	78	53	140 160	123 138	189 216	244 278	373 400	428 462	95 112	187 197	37 42	42 49
63 64	71 80	63	102 90	108	30 **(63)** 32 **(64)**	16[3]	30[3]	14	30	M8	145	125	80	58,5	11,5	14	100	80	120	3	143 114	78	63	160 200	138 156	216 233	278 302	441 458	503 527	112 121	223 243	53 64	60 73
80 81	71 80	80	132 106	131	38 **(80)** 40 **(81)**	19[3]	40[3]	16	30	M10	165	150	100	69,5	14	17	130	110	160	3,5	180 135	86	75	160 200	138 156	216 233	278 302	481 498	543 567	112 121	260 280	79 90	86 99
100	80 90	100	172 131	157	48	24[3]	50[3]	19	40	M12	203	180	125	84,5	16	20	165	130	200	3,5	228 165	104	90	200 200	156 176	233 287	302 366	561 615	630 694	121 141	325 325	139 152	148 165
125	90 100 112	125	212 162	188	60	28[3]	60[3]	24	50	4)	249	225	150	103,5	18	23	215	180	250	4	274 201	122	110	200 250 250	176 194 218	287 310 336	366 405 435	686 709 735	765 804 834	141 151 163	375 400 400	240 249 278	254 265 298

Designs[5] (direction of rotation)

MR C3I 50 ... 125

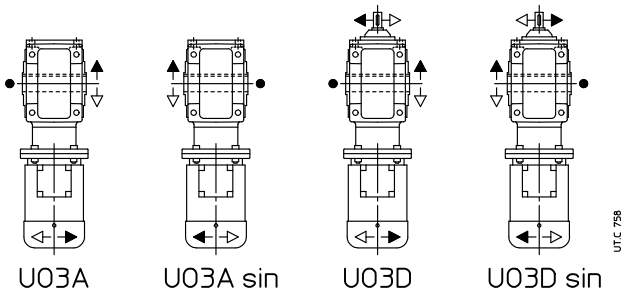

● Position of reference groove (see ch. 6) for radial load verification.
1) Working length for thread 2 · F.
2) Values valid for brake motor.
3) For gearmotor size 50 with motor 71, sizes 63, 64 with motor 80, sizes 80, 81 with motor 80, size 100 with motor 90, size 125 with motors 100, 112 and with i_N = 125, see d_1 for $i_N \geqslant 160$.
4) For dimension, number and angular position see ch. 6.
5) For motor design see ch. 2.

Mounting positions

Unless otherwise stated, gear reducers are supplied in mounting position **B3** (see ch. 2).

MR C3I 50 ... 125

Designs:
UO3A
UO3Asin
UO3D
UO3Dsin

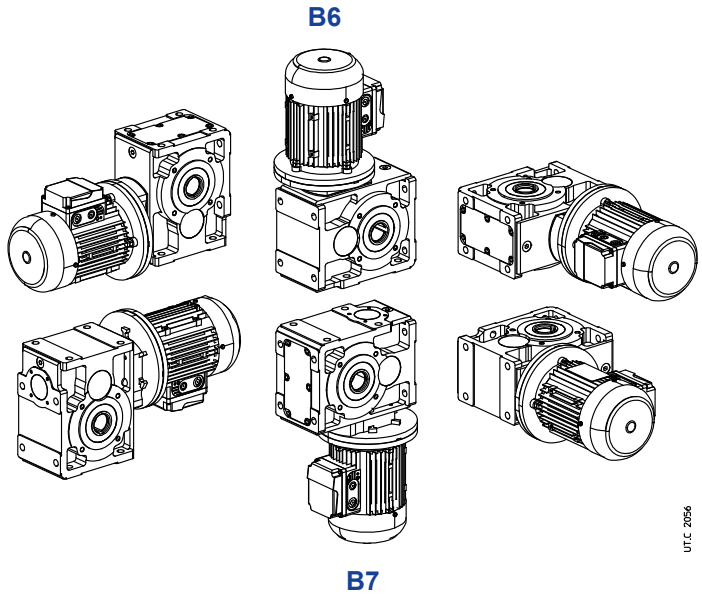

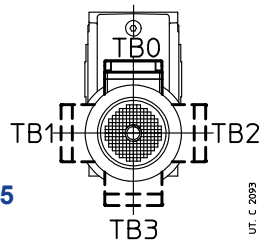

Oil quantity MR C3I 50 ... 125

Lubricant quantities [gal] stated are approximate for provisioning. The exact oil quantity the gear reducer is to be filled with is defined by the level plug.

Mounting position	50	63, 64	80, 81	100	125
B3	0.13	0.32	0.5	0.87	1.7
B8	0.18	0.37	0.66	1.2	2.5
B7	0.13	0.32	0.5	0.87	1.7
B6	0.24	0.48	0.79	1.7	3.4
V5	0.15	0.36	0.61	1.1	2
V6	0.15	0.36	0.61	1.1	2

Lubrication details

MR C3I 100 ... 125

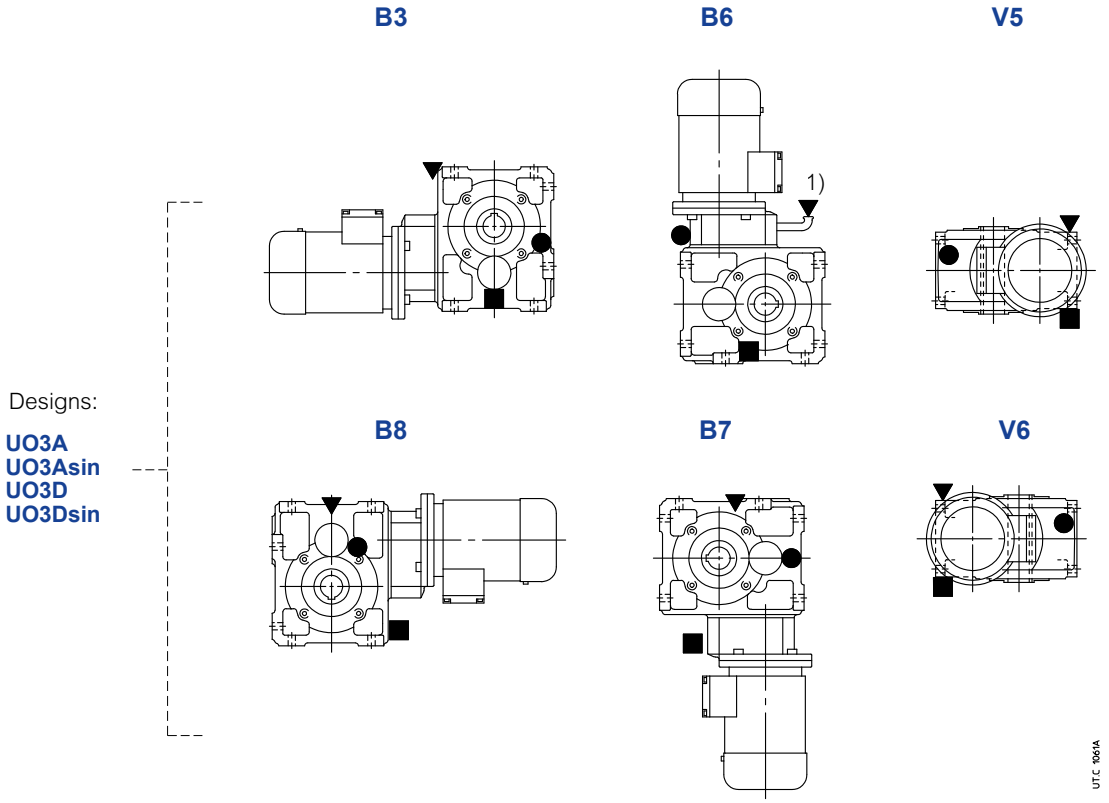

1) See also ch. 6 page 43.

▼ oil filler plug
● oil level plug
■ oil drain plug

▽ oil filler plug on opposite side (not in view)
◍ oil level plug on opposite side (not in view)
▨ oil drain plug on opposite side (not in view)

14.4 - Gearmotors MR C2I

Dimensions

MR C2I 140 ... 360

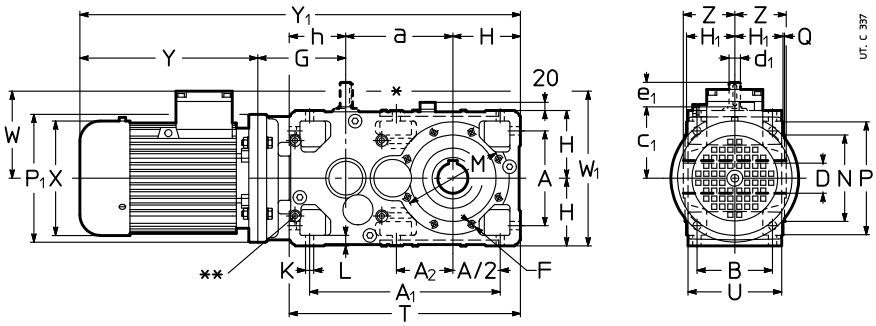

Red.	Mot. B5	a	A B	A_1	A_2	c_1	D Ø H7	d_1 Ø $i_N \leq 63$	e_1	d_1 Ø $i_N \geq 71$	e_1	F 1)	G 4)	H h11	H_1 h12	h h11	K Ø	L	M Ø	N Ø h6 Q	P Ø	T U	Z	P_1 Ø	X Ø ≈	Y ≈	Y ≈ 2)	Y_1 ≈	Y_1 ≈ 2)	W ≈	W_1 ≈	lb	lb 2)
140	**100**	240	212	427	127	157	70	24	50	19	40	5)	170	150	103.5	125	18	23	265	230	300	515	125	250	194	310	405	870	965	151	301	309	324
	112		162																	4		201		250	218	336	435	896	995	163	313	337	357
	132												195											300	257	445	553	1030	1138	194	344	414	441
	160[3]																							300	315	539	640	1124	1225	241	391	509	520
160	**100**	285	252	507	150*	188	80	28	60	24	50	M16	205	180	128.5	150	22	28	265	230	300	615	136	250	194	310	405	980	1075	151	360	465	481
	112		201																	4		249		250	218	336	435	1006	1105	163	360	494	514
	132												220											300	257	445	553	1130	1238	194	374	571	597
	160												250											350	315	539	640	1254	1355	241	421	672	683
	180																							350	354	613	734	1328	1449	278	458	802	780
180	**100**	305	252	527	170	188	90	28	60	24	50	M16	205	180	128.5	150	22	28	300	250	350	635	150	250	194	310	405	1000	1095	151	360	505	520
	112		201																	5		249		250	218	336	435	1026	1125	163	360	534	553
	132												220											300	257	445	553	1150	1258	194	374	611	637
	160												250											350	315	539	640	1274	1375	241	421	712	723
	180																							350	354	613	734	1348	1469	278	458	842	820
	200[3]																							350	354	654	734	1389	1469	278	458	899	873
200	**132**	360	320	635	198*	226	100	38	80	32	80	5)	252	225	158	180	27	34	350	300	400	765	167	300	257	445	553	1282	1390	194	450	877	904
	160		250										282							5		307		350	315	539	640	1406	1507	241	466	979	990
	180																							350	354	613	734	1480	1601	278	503	1109	1087
	200																							400	354	654	734	1521	1601	278	503	1166	1140
	225												312											450	411	710	–	1607	–	298	523	1367	–
225	**132**	385	320	660	223	226	110	38	80	32	80	M20	252	225	158	180	27	34	400	350	450	790	180	300	257	445	553	1307	1415	194	450	946	972
	160		250										282							5		307		350	315	539	640	1431	1532	241	466	1047	1058
	180																							350	354	613	734	1505	1626	278	503	1177	1155
	200																							400	354	654	734	1546	1626	278	503	1235	1208
	225												312											450	411	710	–	1632	–	298	523	1435	–
	250[3]																							450	411	710	–	1632	–	298	523	1486	–
250	**160**	450	396	791	247*	282	125	48	110	38	80	5)	325	280	195	225	33	42	500	450	550	955	206	350	315	539	640	1594	1695	241	560	1512	1523
	180		310																	5		380		350	354	613	734	1668	1789	278	560	1642	1620
	200																							400	354	654	734	1709	1789	278	560	1700	1673
	225												355											450	411	710	–	1795	–	298	578	1900	–
	250																							550	411	735	–	1820	–	298	578	1951	–
	280																							550	490	819	–	1904	–	360	640	2361	–
280	**160**	480	396	821	277	282	140	48	110	38	80	M24	325	280	195	225	33	42	500	450	550	985	222	350	315	539	640	1624	1725	241	560	1631	1642
	180		310																	5		380		350	354	613	734	1698	1819	278	560	1761	1739
	200																							400	354	654	734	1739	1819	278	560	1819	1792
	225												355											450	411	710	–	1825	–	298	578	2019	–
	250																							550	411	735	–	1850	–	298	578	2070	–
	280																							550	490	819	–	1934	–	360	640	2480	–
	315[3]																							550	490	820	–	1935	–	360	640	2394	–
320	**200**	570	510	1005	318*	357[6]	160	55[7]	110[7]	48	110	5)	380	355	241	280	39	52	600	550	660	1205	254	400	354	654	734	1959	2039	278	710	2643	2617
321	**225**		386			380[8]		70[8]	140[8]				410							6		470		450	411	710	–	2045	–	298	710	2844	–
	250																							550	411	735	–	2070	–	298	710	2995	–
	280																							550	490	819	–	2154	–	360	715	3305	–
	315												440											660	604	962	–	2327	–	445	800	3851	–
360	**200**	610	510	1045	358	357[6]	180	55[7]	110[7]	48	110	M30	380	355	241	280	39	52	600	550	660	1245	273	400	354	654	734	1999	2079	278	710	2853	2826
	225		386			380[8]		70[8]	140[8]				410							6		470		450	411	710	–	2085	–	298	710	3053	–
	250																							550	411	735	–	2110	–	298	710	3104	–
	280																							550	490	819	–	2194	–	360	715	3514	–
	315												440											660	604	962	–	2367	–	445	800	4061	–

∗ Only No. 2 holes M 16 × 32 (size 160), M 20 × 38 (size 200), M 24 × 46 (size 250) and M 30 × 58 (size 320) and not for design UO2A.

∗∗ Machined surface and N. 4 threaded holes (dimensions in ch. 6 «Gear reducer input face») on opposite side (not in view) too.

1) Working length for thread 2 · F.
2) Values valid for brake motor.
3) Mounting position **B5R** (see ch. 1.2).
4) For designs **...V**, **...V sin**, **...R**, **...R sin**, sizes 140 ... 360, dimension **G** increases by maximum 10 mm.
5) For dimension, number and angular position see ch. 6.
6) Dimension valid for $i_N \geq 31.5$.
7) Dimension valid for $i_N = 31.5 \ldots 63$.
8) Dimension valid for $i_N \leq 28$.

Designs[1] (direction of rotation)

MR C2I 140 ... 360

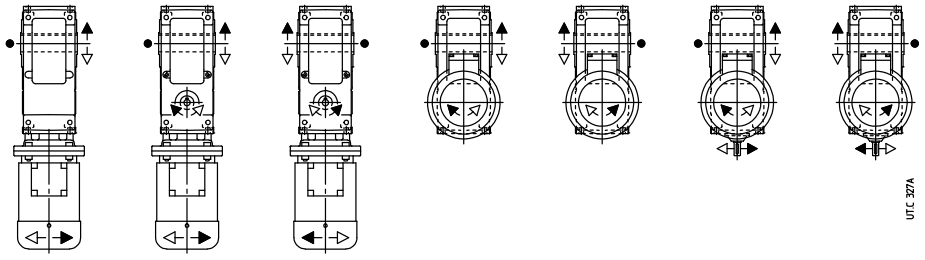

U02A[2] U02H U02Hsin U02V U02Vsin U02R U02Rsin

● Position of reference groove (see ch. 6) for radial load verification.
1) For motor design see ch. 2.
2) The housing of this design is not pre-arranged for other designs.

Mounting positions

Unless otherwise stated, gear reducers are supplied in mounting position **B3** (see ch. 2).

MR C2I 140 ... 360

Designs:
(1)
UO2A
UO2H
UO2Hsin
(2)
UO2V
UO2Vsin
UO2R
UO2Rsin

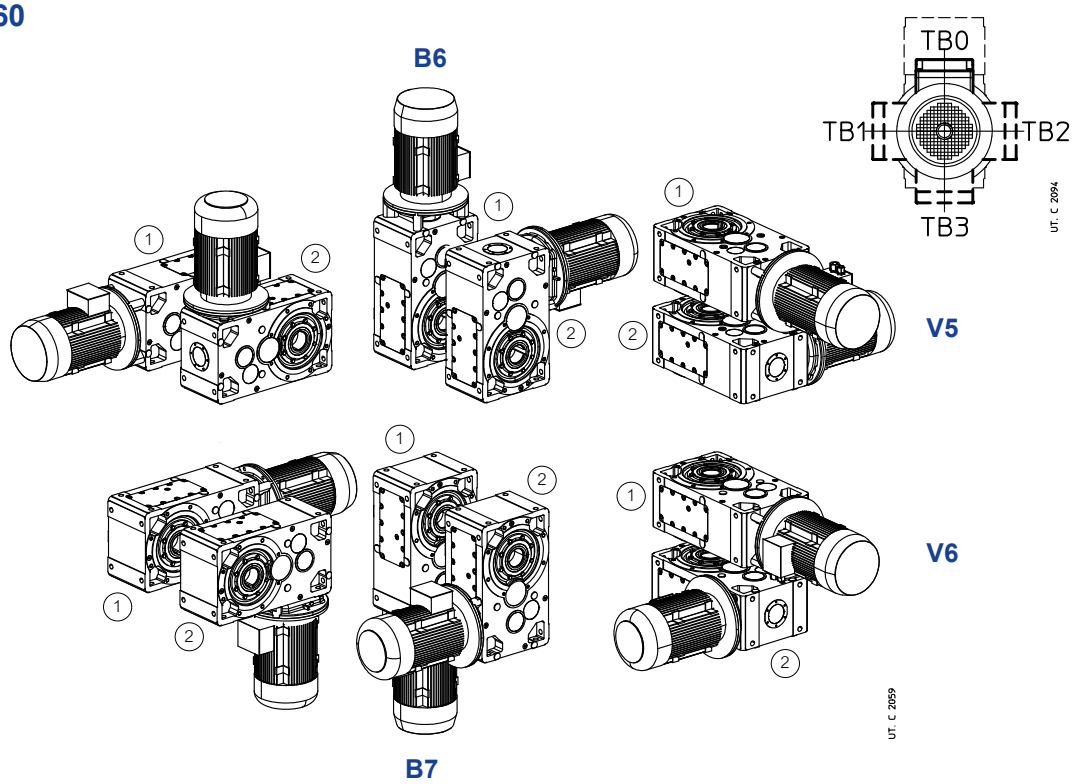

Oil quantity MR C2I 140 ... 360

Lubricant quantities [gal] stated are approximate for provisioning. The exact oil quantity the gear reducer is to be filled with is defined by the level plug.

Mounting position	140	160	180	200	225	250	280	320, 321	360
B3	1.7	3.2	3.4	6.6	6.9	12	13	26	26
B8	1.7	3.2	3.4	6.6	6.9	12	13	26	26
B7	2.6	4.8	5	9.2	9.8	18	19	36	37
B6	2.9	5.3	5.5	10	11	20	21	40	41
V5	2.6	4.8	5	9.2	9.8	18	19	36	37
V6	2.6	4.8	5	9.2	9.8	18	19	36	37

Lubrication details

MR C2I 140 ... 360

Designs:
(1)
UO2A
UO2H
UO2Hsin
(2)
UO2V
UO2Vsin
UO2R
UO2Rsin

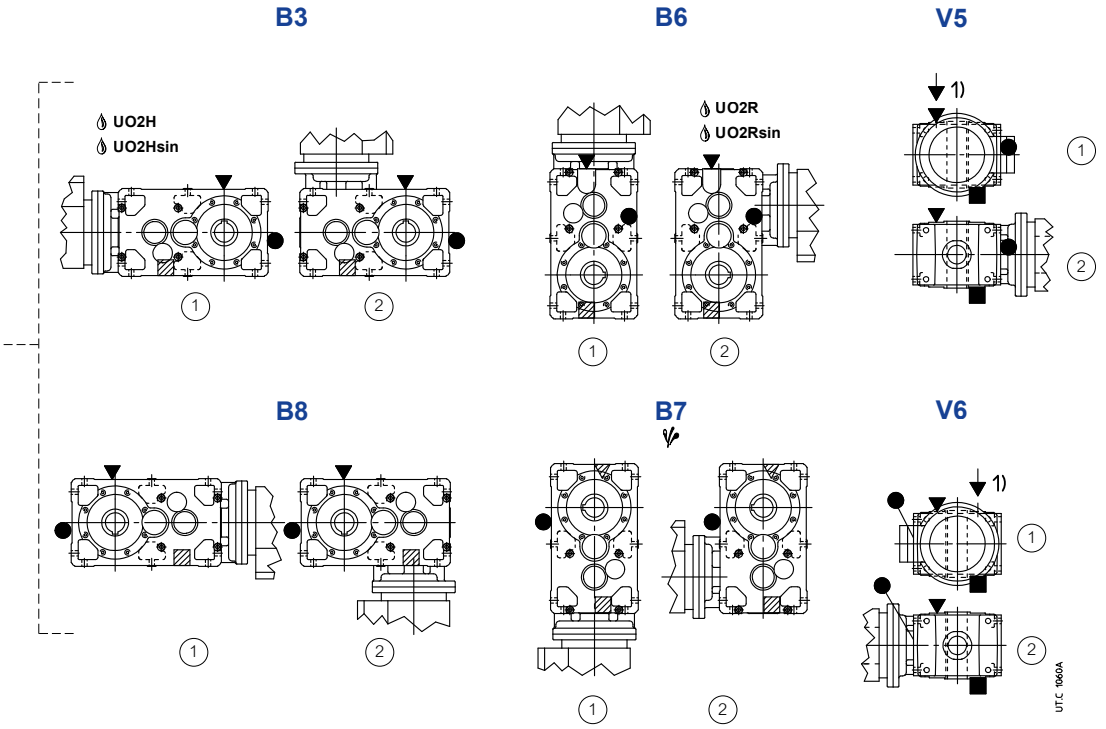

Possible high oil splash: for the corrective factor f_{t_3} of nominal thermal power Pt_N see ch. 4.
Possible bearing lubrication pump (see ch 17 (19)).
1) Position of intermediate hole for mounting position identification.

▼ oil filler plug
● oil level plug
■ oil drain plug

▽ oil drain plug on opposite side (not in view)
◍ oil level plug on opposite side (not in view)
▨ oil drain plug on opposite side (not in view)

15 – Combined gear units

Final helical gear reducer

T_{N2} [lb in] for $n_2 \leqslant$ **14** rpm[1]	**MR 2I + R 2I, 3I** **MR 2I + MR 2I, 3I** 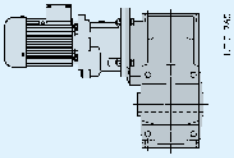 $i_N \approx$ 80 ... 2 500 η_{final} = 0.96	**MR 3I + R 2I, 3I** **MR 3I + MR 2I, 3I** 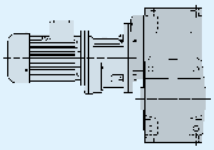 $i_N \approx$ 160 ... 8 000 η_{final} = 0.94	**MR 3I + R 2I, 3I** **MR 3I + MR 2I, 3I** 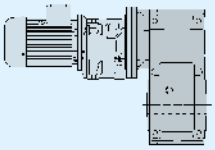 $i_N \approx$ 125 ... 12 500 η_{final} = 0.94
2 790	**MR 2I 63 - 19×160 – 19.3** + **R 2I** or **MR 2I, 3I 40** i_{final} = 19.3	**MR 3I 63 - 14×140 – 48.9** + **R 2I** or **MR 2I, 3I 32** i_{final} = 48.9	
3 540	**MR 2I 64 - 19×160 – 20.1** + **R 2I** or **MR 2I, 3I 40** i_{final} = 20.1	**MR 3I 64 - 14×140 – 50.9** + **R 2I** or **MR 2I, 3I 32** i_{final} = 50.9	
5 930	**MR 2I 80 - 19×160 – 20.8** + **R 2I** or **MR 2I, 3I 40** i_{final} = 20.8	**MR 3I 80 - 19×160 – 52.9** + **R 2I** or **MR 2I, 3I 40** i_{final} = 52.9	
6 900	**MR 2I 81 - 19×160 – 20.8** + **R 2I** or **MR 2I, 3I 40** i_{final} = 20.8	**MR 3I 81 - 19×160 – 52.9** + **R 2I** or **MR 2I, 3I 40** i_{final} = 52.9	
14 150	**MR 2I 100 - 24×200 – 19.3** + **R 2I, 3I** or **MR 2I, 3I 50**[2] i_{final} = 19.3	**MR 3I 100 - 24×200 – 49** + **R 2I, 3I** or **MR 2I, 3I 50**[2] i_{final} = 49	
27 900	**MR 2I 125 - 28×250 – 19.3** + **R 2I, 3I** or **MR 2I, 3I 63**[2] i_{final} = 19.3	**MR 3I 125 - 24×200 – 60.2** + **R 2I, 3I** or **MR 2I, 3I 50**[2] i_{final} = 60.2	
42 050			**MR 3I 140 - 28×250 – 50.4** + **R** or **MR 2I, 3I 63**[2] i_{final} = 50.4
62 850			**MR 3I 160 - 38×300 – 31.6** + **R** or **MR 2I 80**[2] i_{final} = 31.6 **MR 3I 160 - 28×250 – 107** + **R** or **MR 2I, 3I 63**[2] i_{final} = 107 for $n_2 \leqslant$ 2.8 rpm
84 100			**MR 3I 180 - 38×300 – 51** +**R** or **MR 2I 80**[2] i_{final} = 51 **MR 3I 180 - 28×250 – 108** +**R** or **MR 2I, 3I 63**[2] i_{final} = 108 for $n_2 \leqslant$ 2.8 rpm
123 900			**MR 3I 200 - 48×350 – 31.5** +**R** or **MR 2I 100**[2] i_{final} = 31.5 **MR 3I 200 - 38×300 – 100** +**R** or **MR 2I, 3I 80**[2] i_{final} = 100 for $n_2 \leqslant$ 2.8 rpm
177 000			**MR 3I 225 - 48×350 – 51.8** +**R** or **MR 2I 100**[2] i_{final} = 51.8 **MR 3I 225 - 38×300 – 98.5** +**R** or **MR 2I, 3I 80**[2] i_{final} = 98.5 for $n_2 \leqslant$ 2.8 rpm
278 800			**MR 3I 250 - 60×450 – 33.5** +**R** or **MR 2I 125**[2] i_{final} = 33.5 **MR 3I 250 - 48×350 – 98.5** +**R** or **MR 2I, 3I 100**[2] i_{final} = 98.5 for $n_2 \leqslant$ 2.8 rpm
331 900			**MR 3I 280 - 60×450 – 52.7** +**R** or **MR 2I 125**[2] i_{final} = 52.7 **MR 3I 280 - 48×350 – 100** +**R** or **MR 2I, 3I 100**[2] i_{final} =100 for $n_2 \leqslant$ 2.8 rpm
420 400			**MR 3I 320 - 60×450 – 67.1** + **R** or **MR 2I 125**[2] i_{final} = 67.1 **MR 3I 320 - 60×450 – 105** + **R** or **MR 2I, 3I 125**[2] i_{final} = 105 for $n_2 \leqslant$ 2.8 rpm
531 000			**MR 3I 321 - 60×450 – 67.1** + **R** or **MR 2I 125**[2] i_{final} = 67.1 **MR 3I 321 - 60×450 – 105** + **R** or **MR 2I, 3I 125**[2] i_{final} = 105 for $n_2 \leqslant$ 2.8 rpm
685 900			**MR 3I 360 - 60×450 – 103** + **R** or **MR 2I, 3I 125**[2] i_{final} = 103

Initial gear reducer or gearmotor dimensions and performance: catalog E ch. 8, 9 and 10.
1) *fs* required may be reduced by **1.06** for n_2 = 2,8 – 0.7 rpm, by **1.12** for $n_2 \leqslant$ 0.71 rpm, provided that it is always $\geqslant$ 0.8.
2) Initial gear reducer or gearmotor design «Oversized B5 flange»; size 63 has a low speed shaft reduced to 28 mm: «Oversized B5 flange - Ø 28».

Final bevel helical gear reducer

T_{N2} [lb in] for $n_2 \leqslant$ **14** rpm[1]	**MR ICI + R 2I, 3I** **MR ICI + MR 2I, 3I** 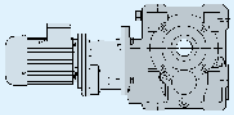 $i_N \approx$ 125 ... 8 000 η_{final} = 0.94	**MR C2I + MR 2I, 3I** **MR C2I + MR 2I, 3I** 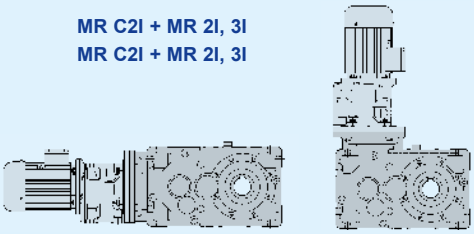 $i_N \approx$ 125 ... 12 500 η_{final} = 0.94
2 790	**MR ICI 63 - 19×160 – 32** + **R** or **MR 2I, 3I 40** i_{final} = 32	
3 540	**MR ICI 64 - 19×160 – 32** + **R** or **MR 2I, 3I 40** i_{final} = 32	
5 930	**MR ICI 80 - 19×160 – 33.4** + **R** or **MR 2I, 3I 40** i_{final} = 33.4	
6 900	**MR ICI 81 - 19×160 – 33.4** + **R** or **MR 2I, 3I 40** i_{final} = 33.4	
14 150	**MR ICI 100 - 24×200 – 31.4** + **R** or **MR 2I, 3I 50**[2] i_{final} = 31.4	
27 900	**MR ICI 125 - 28×250 – 32** + **R** or **MR 2I, 3I 63**[2] i_{final} = 32 **MR ICI 125 - 24×200 – 62.5** + **R** or **MR 2I, 3I 50**[2] i_{final} = 62.5 for $T_{N2} \leqslant$ 23450 lb in	
42 050	**MR ICI 140 - 28×250 – 40** + **R** or **MR 2I, 3I 63**[2] i_{final} = 40 for $T_{N2} \leqslant$ 33200 lb in	**MR C2I 140 - 28×250 – 50.4** + **R** or **MR 2I, 3I 63**[2] i_{final} = 50.4
62 850	**MR ICI 160 - 38×300 – 33.3** + **R** or **MR 2I, 3I 80**[2] i_{final} = 33.3 **MR ICI 160 - 28×250 – 62.5** + **R** or **MR 2I, 3I 63**[2] i_{final} = 62.5 for $T_{N2} \leqslant$ 53100 lb in	**MR C2I 160 - 38×300 – 32.5** + **R** or **MR 2I 80**[2] i_{final} = 32.5 **MR C2I 160 - 28×250 – 103** + **R** or **MR 2I, 3I 63**[2] i_{final} = 103 for $n_2 \leqslant$ 2.8 rpm
84 100	**MR ICI 180 - 38×300 – 40.9** + **R** or **MR 2I, 3I 80**[2] i_{final} = 40.9 for $T_{N2} \leqslant$ 75250 lb in	**MR C2I 180 - 38×300 – 52.4** + **R** or **MR 2I 80**[2] i_{final} = 52.4 **MR C2I 180 - 28×250 – 104** + **R** or **MR 2I, 3I 63**[2] i_{final} = 104 for $n_2 \leqslant$ 2.8 rpm
123 900	**MR ICI 200 - 48×350 – 33.3** + **R** or **MR 2I, 3I 100**[2] i_{final} = 33.3 **MR ICI 200 - 38×300 – 62.5** + **R** or **MR 2I, 3I 80**[2] i_{final} = 62.5 for $T_{N2} \leqslant$ 104400 lb in	**MR C2I 200 - 48×350 – 32.3** + **R** or **MR 2I 100**[2] i_{final} = 32.3 **MR C2I 200 - 38×300 – 102** + **R** or **MR 2I, 3I 80**[2] i_{final} =102 for $n_2 \leqslant$ 2.8 rpm
177 000		**MR C2I 225 - 48×350 – 53.1** + **R** or **MR 2I 100**[2] i_{final} = 53.1 **MR C2I 225 - 38×300 – 100** + **R** or **MR 2I, 3I 80**[2] i_{final} = 100 for $n_2 \leqslant$ 2.8 rpm
278 800		**MR C2I 250 - 60×450 – 33.9** + **R** or **MR 2I 125**[2] i_{final} = 33.9 **MR C2I 250 - 48×350 – 98.5** + **R** or **MR 2I, 3I 100**[2] i_{final} = 98.5 for $n_2 \leqslant$ 2.8 rpm
331 900		**MR C2I 280 - 60×450 – 53.1** + **R** or **MR 2I 125**[2] i_{final} = 53.1 **MR C2I 280 - 48×350 – 100** + **R** or **MR 2I, 3I 100**[2] i_{final} = 100 for $n_2 \leqslant$ 2.8 rpm
420 400		**MR C2I 320 - 60×450 – 65.1** + **R** or **MR 2I 125**[2] i_{final} = 65.1 **MR C2I 320 - 60×450 – 103** + **R** or **MR 2I, 3I 125**[2] i_{final} = 103 for $n_2 \leqslant$ 2.8 rpm
531 000		**MR C2I 321 - 60×450 – 65.1** + **R** or **MR 2I 125**[2] i_{final} = 65.1 **MR C2I 321 - 60×450 – 103** + **R** or **MR 2I, 3I 125**[2] i_{final} = 103 for $n_2 \leqslant$ 2.8 rpm
685 900		**MR C2I 360 - 60×450 – 102** + **R** or **MR 2I, 3I 125**[2] i_{final} = 102

Initial gear reducer or gearmotor dimensions and performance: catalog E ch. 8, 9 and 10.
1) *f*s required may be reduced by **1.06** for n_2 = 2.8 – 0.7 rpm, by **1.12** for $n_2 \leqslant$ 0.71 rpm, provided that it is always ⩾ 0.8.
2) Initial gear reducer or gearmotor design «Oversized B5 flange»; size 63 has a low speed shaft reduced to 28 mm: «Oversized B5 flange - Ø 28».

Initial gear reducer or gearmotor mounting position

In order to make easier the individualization of the combined gearmotors mounting position refer to the following table where, according to the type, to the mounting position and to the final gear reducer, the mounting positions of the initial gear reducer or gearmotor are stated.

Initial **gear reducer or gearmotor** mounting position

	mounting position of final gear reducer					
	B3	**B6**	**B7**	**B8**	**V5**	**V6**
MR 2I 63 ... 125 + R 2I, 3I od.r MR 2I, 3I	B5* =40 1) B7 ≥50	B5* =40 B3* ≥50	B5* =40 B3* ≥50	B5* =40 1) B6 ≥50	V1 =40 V5 ≥50	V3 =40 V6 ≥50
MR 3I 63 ... 125 + R 2I, 3I od.r MR 2I, 3I	B5* ≤40 1) B7 ≥50	B5* ≤40 B3* ≥50	B5* ≤40 B3* ≥50	B5* ≤40 1) B6 ≥50	V1 ≤40 V5 ≥50	V3 ≤40 V6 ≥50
MR 3I 140 ... 360 + R 2I, 3I od.r MR 2I, 3I	B7	B3*	B3*	B6	V5	V6
MR ICI 63 ... 200 + R 2I, 3I od.r MR 2I, 3I	B5* ≤40 B3* ≥50	V1 ≤40 V5 ≥50	V3 ≤40 V6 ≥50	B5* ≤40 B3* ≥50	B5* ≤40 1) B6 ≥50	B5* ≤40 1) B7 ≥50
MR C2I 140 ... 360 + R 2I, 3I od.r MR 2I, 3I	B3*	V5	V6	B3*	B7	B6
	V5	B3*	B3*	V6	B7	B6

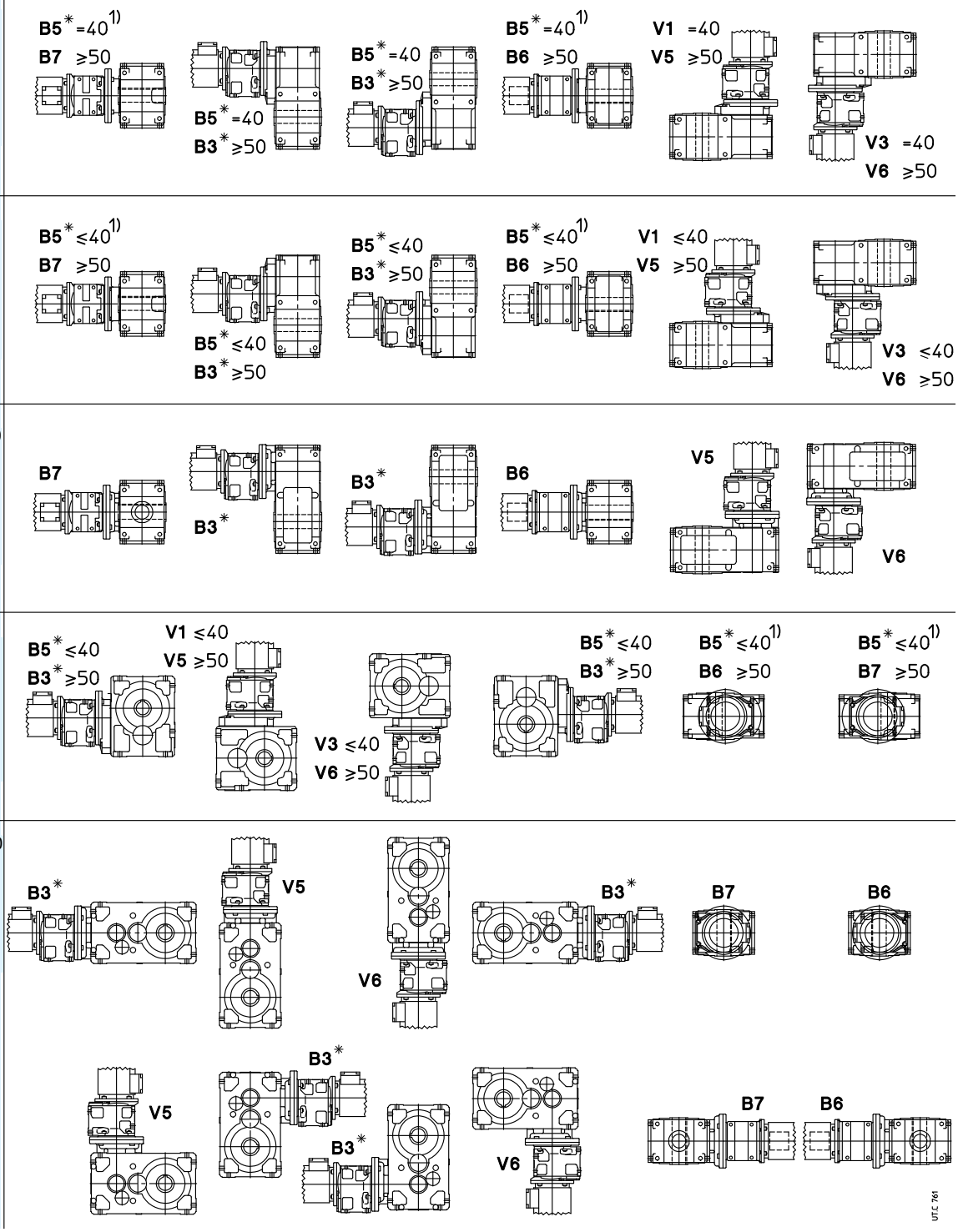

* This mounting position, being standard, must not be stated in the designation.
1) Grease quantity is the same foreseen for B3 mounting position in cat. E.
On name plate there is a * in correspondence of mounting position.

16 – Radial loads

16.1 - Radial loads F_{r1} [lb] on high speed shaft end

Radial loads generated on the shaft end by a drive connecting gear reducer and motor must be less than or equal to those given in the relevant table.

n_1 rpm	50		63, 64				80, 81			100				125, 140				
	2I		I	2I	3I		I	2I	3I	I	2I	3I		I	2I	3I 140	3I 125	
	CI	ICI		CI		ICI		CI	ICI		CI	ICI			CI	C2I	ICI	
												$i_N \leq 80$	$i_N \geq 100$				$i_N \leq 80$	$i_N \geq 100$
1800	67	34	170	106	34	53	265	170	85	425	265	132	85	670	425	265	212	132
1400	75	38	190	118	38	60	300	190	95	475	300	150	95	750	475	300	236	150
1120	80	40	200	125	40	63	315	200	100	500	315	160	100	800	500	315	250	160
900	85	43	212	132	43	67	335	212	106	530	335	170	106	850	530	335	265	170
710	95	48	236	150	48	75	375	236	118	600	375	190	118	950	600	375	300	190
560	100	50	250	160	50	80	400	250	125	630	400	200	125	1 000	630	400	315	200
450	106	53	265	170	53	85	425	265	132	670	425	212	132	1 060	670	425	335	212
355	118	60	300	190	60	95	475	300	150	750	475	236	150	1 180	750	475	375	236
F_{r1max}	118	60	300	190	60	95	475	300	150	750	475	236	150	1180	750	475	375	236

n_1 rpm	160, 180				200, 225				250, 280			320 ... 360		
	I	2I	3I		I	2I	3I		I	2I	3I	I	2I	3I
		CI	C2I	ICI		CI	C2I	ICI		CI	C2I		CI	C2I
1800	1 060	670	425	335	1 700	1 060	670	530	2 650	1 700	1 060	4 250	2 650	1 700
1400	1 180	750	475	375	1 900	1 180	750	600	3 000	1 900	1 180	4 750	3 000	1 900
1120	1 250	800	500	400	2 000	1 250	800	630	3 150	2 000	1 250	5 000	3 150	2 000
900	1 320	850	530	425	2 120	1 320	850	670	3 350	2 120	1 320	5 300	3 350	2 120
710	1 500	950	600	475	2 360	1 500	950	750	3 750	2 360	1 500	6 000	3 750	2 360
560	1 600	1 000	630	500	2 500	1 600	1 000	800	4 000	2 500	1 600	6 300	4 000	2 500
450	1 700	1 060	670	530	2 650	1 700	1 060	850	4 250	2 650	1 700	6 700	4 250	2 650
355	1 900	1 180	750	600	3 000	1 900	1 180	950	4 750	3 000	1 900	7 500	4 750	3 000
F_{r1max}	**1 900**	**1 180**	**750**	**600**	**3 000**	**1 900**	**1 180**	**950**	**4 750**	**3 000**	**1 900**	**7 500**	**4 750**	**3 000**

The radial load *F*r1 given by the following formula refers to most common:

$$F_{r1} = \frac{189\,090 \cdot P_1}{d \cdot n_1}$$ [lb] for timing belt drive

$$F_{r1} = \frac{315\,150 \cdot P_1}{d \cdot n_1}$$ [lb] for V-belt drive

where:
P_1 [hp] is the power required at the input side of gear reducer;
n_1 [rpm] is the speed;
d [in] is the pitch diameter.

Radial loads given in the table are valid for overhung loads on centre line of high speed shaft end, i.e. operating at a distance of 0.5 · e (e = shaft end length) from the shoulder. If radial loads are in a different position, i.e. at a distance differing from 0.5 · e from shoulder, re-calculate the permissible value of radial load according to the following formula, trying not to exceed the maximum value F_{r1max}, stated in the table:

$$F_{r1}' = F_{r1} \cdot \frac{e/2 + y}{x + y}$$ [lb]

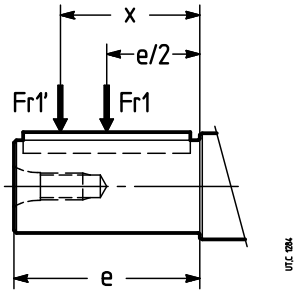

where:
F_{r1}' [lb] is the permissible radial load acting at the distance x from shaft shoulder;
F_{r1} [lb] is the permissible radial load acting on centre line of high speed shaft end (see table above);
e [mm] is shaft end length (see ch. 8, 10);
y [mm] is given in the table;
x [mm] is the distance between the shaft shoulder and the load application point.

16.1 - Radial loads F_{r1} [lb] on high speed shaft end

	y [mm]									
	R I		R 2I	R 3I	R CI		R ICI	R C2I		
40	–		–	–	–	–		–		
50	–		92	–	62 54	$i \leqslant 7.85$ $i \geqslant 10.3$	44	–		
63. 64	92		98	37.5	75 60	$i \leqslant 8$ $i \geqslant 10$	52.5	–		
80. 81	110		112	52.5	88 74	$i \leqslant 8.33$ $i \geqslant 10.4$	52.5	–		
100	142 136	$i \leqslant 3.27$ $i \geqslant 3.92$	137	63	99 87	$i \leqslant 7.85$ $i \geqslant 9.81$	63	–		
125	170 167	$i \leqslant 3.62$ $i \geqslant 4$	166	74	134 94	$i \leqslant 8$ $i \geqslant 10$	74	–		
140	166 173	$i \leqslant 4.08$ $i \geqslant 4.5$	166	98	134 94	$i \leqslant 9$ $i \geqslant 10.2$	74	99 87	$i \leqslant 32$ $i \geqslant 37.5$	
160	210		207	121	135 110	$i \leqslant 8.27$ $i \geqslant 9.04$	87	134 94	$i \leqslant 33.1$ $i \geqslant 37.5$	
180	214		207	121	135 110	$i \leqslant 9.33$ $i \geqslant 10.4$	87	134 94	$i \leqslant 33.2$ $i \geqslant 37.3$	
200	265		256	146	163 139	$i \leqslant 8.27$ $i \geqslant 8.93$	102	135 110	$i \leqslant 34.2$ $i \geqslant 35.3$	
225	265		256	146	163 139	$i \leqslant 9.33$ $i \geqslant 10.2$	–	135 110	$i \leqslant 33.7$ $i \geqslant 36.2$	
250	356 332	$i \leqslant 3.62$ $i \geqslant 4$	317	182	200 174	$i \leqslant 10$ $i \geqslant 11.4$	–	163 139	$i \leqslant 33.1$ $i \geqslant 37.2$	
280	356 332	$i \leqslant 4.08$ $i \geqslant 4.5$	317	182	200 174	$i \leqslant 11.3$ $i \geqslant 12.9$	–	163 139	$i \leqslant 33.7$ $i \geqslant 37.5$	
320. 321	417		390	222	256 250	$i \leqslant 6.27$ $i \geqslant 7.83$	–	204 174	$i \leqslant 31.3$ $i \geqslant 36.3$	
360	417		390	222	256 250	$i \leqslant 9.2$ $i \geqslant 10$	–	204 174	$i \leqslant 32.5$ $i \geqslant 37.3$	

It is always advisable **to mount the pulley against the shaft shoulder** and in any case to avoid that the pulley exceeds the shaft end.

An **axial load** of up to 0.2 times the value in the table is permissible, simultaneously with the radial load.

In absence of the radial load, an axial load may be acting on center line, not higher than 0.5 times the stated radial load.

IMPORTANT: tabulated values for radial load *F*r1 can increase considerably in certain instances (direction of rotation, angular position of load, etc.). If necessary and/or in presence of **misaligned** axial loads, consult us.

16.1 - Radial loads F_{r1} [N] on high speed shaft end

V-belt drives

In the table the motor pulleys are given for the several power and motor polarity, together with radial loads present on motor and gear reducer motor shaft.

The drives have been calculated with a service factor ⩾1.4; in order to increase the service factor with same ***d*** value and number of belts, replace section SPA with SPB, section SPB with SPC, section SPC with 8V.

The radial loads have been calculated according to the formula $\frac{315\,150 \cdot P_1}{d \cdot n_1}$.

Radial load F_{r1}, relevant to the motor pulley selected, must be less than or equal to the one permitted by gear reducer.

IMPORTANT: for the good drive running and in order not to overload the motor and gear reducer bearings, reduce the overhang to a minimum and do not stress the belts excessively. The pulleys with ***d*** ⩾ 16 must be dynamically balanced.

Motor			Motor pulley: belt number and section, pitch diameter ***d*** [in], radial load F_{r1} [lb]														
P_1 hp	Size and pole n.			***d***	F_{r1} ≈		***d***	F_{r1} ≈		***d***	F_{r1} ≈		***d***	F_{r1} ≈		***d***	F_{r1} ≈
1,5	80B	2	2 Z	**2.8**	50	2 Z	**3.15**	45	2 Z	**3.55**	40	1 Z	**4**	36	1 Z	**4.5**	32
	90S	4	2 A	**3.55**	80	2 A	**4**	71	2 A	**4.5**	63	1 A	**5**	56	1 A	**5.6**	50
	90L	6	2 A	**3.55**	118	2 A	**4**	100	2 A	**4.5**	90	2 A	**5**	80	1 A	**5.6**	75
2	90S	2	2 A	**3.55**	53	2 A	**4**	48	1 A	**4.5**	40	1 A	**5**	38	1 A	**5.6**	34
	90L	4	2 A	**3.55**	106	2 A	**4**	95	2 A	**4.5**	80	2 A	**5**	75	1 A	**5.6**	67
	100LA	6	3 A	**3.55**	150	3 A	**4**	140	2 A	**4.5**	118	2 A	**5**	112	2 A	**5.6**	100
3	90LA	2	2 A	**3.55**	80	2 A	**4**	71	2 A	**4.5**	63	2 A	**5**	56	1 A	**5.6**	50
	100LA	4	3 A	**3.55**	160	3 A	**4**	140	3 A	**4.5**	125	2 A	**5**	112	2 A	**5.6**	100
	112M	6	3 A	**4.5**	180	3 A	**5**	160	3 A	**5.6**	150	2 A	**6.3**	132	2 A	**7.1**	118
4	100LA	2	3 A	**3.55**	106	3 A	**4**	95	2 A	**4.5**	80	2 A	**5**	75	2 A	**5.6**	67
	100LB	4	3 A	**4.5**	160	3 A	**5**	150	2 A	**5.6**	132	2 A	**6.3**	118	2 A	**7.1**	106
	132S	6	3 SPA	**4**	280	3 SPA	**4.5**	250	2 SPA	**5**	224	2 SPA	**5.6**	200	2 SPA	**6.3**	170
5.4	112M	2	3 A	**4**	125	3 A	**4.5**	112	2 A	**5**	100	2 A	**5.6**	90	2 A	**6.3**	80
	112M	4	3 A	**5**	200	3 A	**5.6**	180	3 A	**6.3**	160	2 A	**7.1**	140	2 A	**8**	125
	132M	6	3 SPA	**4.5**	335	3 SPA	**5**	300	2 SPA	**5.6**	265	2 SPA	**6.3**	236	2 SPA	**7.1**	212
7.5	132S	2	3 SPA	**4**	170	3 SPA	**4.5**	150	2 SPA	**5**	140	2 SPA	**5.6**	125	2 SPA	**6.3**	112
	132S	4	3 SPA	**4.5**	315	3 SPA	**5**	400	2 SPA	**5.6**	250	2 SPA	**6.3**	224	2 SPA	**7.1**	200
	132MB	6	3 SPA	**5.6**	375	3 SPA	**6.3**	335	2 SPA	**7.1**	280	2 SPA	**8**	250	2 SPA	**9**	224
10	132SB (SC)	2	3 SPA	**4.5**	250	3 SPA	**5**	224	2 SPA	**5.6**	200	2 SPA	**6.3**	180	2 SPA	**7.1**	132
(12.4)	132M (MB)	4	3 SPA	**5**[1)]	375	3 SPA	**5.6**	400	2 SPA	**6.3**	335	2 SPA	**7.1**	315	2 SPA	**8**	280
	160M	6	3 SPA	**6.3**	425	3 SPA	**7.1**	375	3 SPA	**8**	335	2 SPA	**9**	300	2 SPA	**10**	280
15	160MR	2	3 SPA	**5**	280	3 SPA	**5.6**	250	2 SPA	**6.3**	224	2 SPA	**7.1**	200	2 SPA	**8**	170
	160M	4	3 SPA	**6.3**	450	3 SPA	**7.1**	400	3 SPA	**8**	355	2	**9**	315	2 SPA	**10**	280
	160L	6	3 SPA	**8**	500	3 SPA	**9**	450	3 SPA	**10**	400	2	**11.2**	375	2 SPA	**12.5**	335
20	160M	2	3 SPA	**5.6**	335	3 SPA	**6.3**	300	3 SPA	**7.1**	265	2 SPA	**8**	236	2 SPA	**9**	200
	160L	4	3 SPA	**7.1**	530	3 SPA	**8**	475	3 SPA	**9**	400	3 SPA	**10**	375	2 SPA	**11.2**	335
	180L	6	4 SPA	**8**	670	4 SPA	**9**	600	4 SPA	**10**	560	3 SPA	**11.2**	500	3 SPA	**12.5**	450
25	160L	2	3 SPA	**6.3**	375	3 SPA	**7.1**	335	3 SPA	**8**	280	3 SPA	**9**	265	2 SPA	**10**	236
	180M	4	4 SPA	**7.1**	670	4 SPA	**8**	560	4 SPA	**9**	500	3 SPA	**10**	475	3 SPA	**11.2**	425
	200LR	6	4 SPB	**8**	850	4 SPB	**9**	750	3 SPB	**10**	670	3 SPB	**11.2**	600	3 SPB	**12.5**	560
30	180L	4	4 SPA	**8**	710	4 SPA	**9**	630	4 SPA	**10**	560	3 SPA	**11.2**	500	3 SPA	**12.5**	450
	200L	6	4 SPB	**9**	900	4 SPB	**10**	800	3 SPB	**11.2**	750	3 SPB	**12.5**	670	3 SPB	**14**	600
40	200L	4	4 SPB	**9**	800	4 SPB	**10**	750	3 SPB	**11.2**	670	3 SPB	**12.5**	600	3 SPB	**14**	530
	225M	6	5 SPB	**10**	1120	5 SPB	**11.2**	1000	4 SPB	**12.5**	900	4 SPB	**14**	800	4 SPB	**16**	670
50	225S	4	5 SPB	**9**	1000	5 SPB	**10**	950	4 SPB	**11.2**	850	4 SPB	**12.5**	750	4 SPB	**14**	670
	250M	6	6 SPB	**10**	1400	6 SPB	**11.2**	1250	5 SPB	**12.5**	1120	5 SPB	**14**	1000	5 SPB	**16**	850
60	225M	4	5 SPB	**10**	1120	5 SPB	**11.2**	1000	4 SPB	**12.5**	900	4 SPB	**14**	800	4 SPB	**16**	710
75	250M	4	6 SPB	**10**	1400	6 SPB	**11.2**	1250	5 SPB	**12.5**	1120	5 SPB	**14**	1000	5 SPB	**16**	850
100	280S	4	6 SPB	**11.2**	1700	5 SPB	**12.5**	1500	5 SPB	**14**	1320	5 SPB	**16**	1180	–	–	–
125	280M	4	6 SPB	**12.5**	1900	5 SPC	**12.5**	1900	5 SPC	**14**	1700	4 SPC	**16**	1400	–	–	–
150	315S	4	6 SPC	**12.5**	2240	5 SPC	**14**	2000	4 SPC	**16**	1700	–	–	–	–	–	–
175	315M	4	6 SPC	**14**	2360	5 SPC	**16**	2000	4 SPC	**18**	1800	–	–	–	–	–	–
200	315MC	4	6 SPC	**16**	2360	6 SPC	**18**	2000	5 8V	**18**	2000	–	–	–	–	–	–

1) Not valid for power 12.4 hp: d ⩾ 4.5 in.

Note: Pulley band width: **1 Z** 16, **2 Z** 28, **1A** 20, **2 A-2 SPA** 35, **3 A-3 SPA** 50, **4 SPA** 65, **3 SPB** 63, **4 SPB** 82, **5 SPB** 101, **6 SPB** 120, **4 SPC** 110, **5 SPC** 136, **6 SPC** 162, **5 8V** 152.

16.2 - Axial loads F_{a2} [lb] or radial loads F_{r2} [lb] on low speed shaft end

Axial loads F_{a2}

Permissible *F*a2 is shown in the column where direction of rotation of low speed shaft (black or white arrow) and direction of the axial force (solid or broken arrow) correspond to those of the gear reducer in question. Direction of rotation and direction of force may be established viewing the gear reducer from any point (from groove side or from opposite side to groove, indifferently), providing the same point is adopted for rotation and axial load (see fig. below).

Notes:

– White and black arrows of present chapter do not refer to the ones stating the correspondence of direction of rotation for the different designs (see ch. 8, 10, 12, 14);

– Wherever possible, choose the load conditions corresponding to the column with the highest admissible values.

– The values stated in the table are valid for the center line axial load; in the event of a misaligned axial load, consult us.

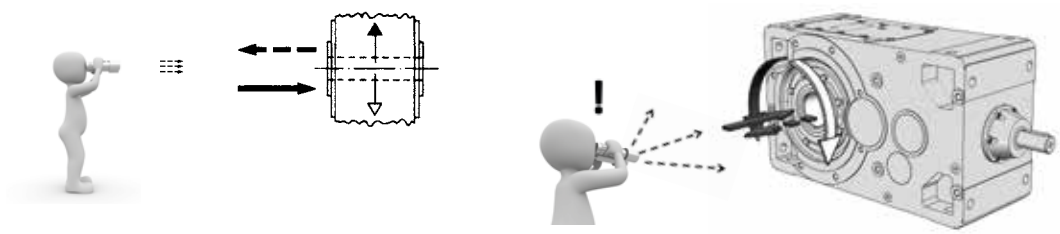

Radial loads F_{r2}

Radial loads generated on the shaft end by a drive connecting gear reducer and machine must be less than or equal to those given in the following pages.

Normally, radial loads on low speed shaft ends are considerable: in fact there is a tendency to connect the gear reducer to the machine by means of a transmission with high transmission ratio (economizing on the gear reducer) and with small diameters (economizing on the drive, and for requirements dictated by overall dimensions).

Bearing life and wear (which also affect gears unfavourably) and low speed shaft strength, clearly impose limits on permissible radial load.

The permissible radial loads stated in the tables are according to: low speed shaft end where the radial load is applied according to reference groove (see ch. 6) of the product of angular speed n_2 [rpm] multiplied by the bearing life required L_h [h], of direction of rotation, of angular position φ [°] of load and of torque required T_2 [lbf in].

The radial loads given in the tables are valid for loads on shaft center line of low speed shaft, i.e. at a distance from shoulder of 0,5 · E (E = shaft end length); in the event of radial load acting in a different position (not center line), i.e. at a distance from shoulder different from 0,5 · E, re-calculate the permissible value of radial load according to the following formula, verifying simultaneously not to exceed the maximum value F_{r2max}, given in the tables.

$$F_{r2}' = F_{r2} \cdot \frac{E/2 + y}{x + y} \quad [lb]$$

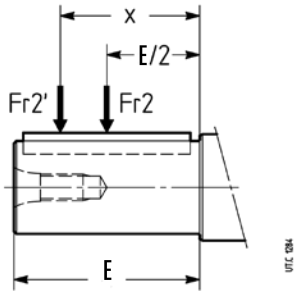

where:

F_{r2}' [lb] is the permissible radial load acting at distance x from the shoulder;

F_{r2} [lb] is the permissible radial load acting on center line of low speed shaft end (see table on following pages); [mm] is the shaft end length (see ch. 17);

y [mm] is given in the table;

x [mm] is the distance of load application starting from shaft shoulder.

	size															
	40	**50**	**63, 64**	**80**	**81**	**100**	**125**	**140**	**160**	**180**	**200**	**225** 1)	**250**	**280** 1)	**320, 321**	**360** 1)
y	86	88	95	111	116	134	166	189	205	228	258	287 (279)	318	351 (344)	398	432 (424)
E	30	36	58	58	58	82	97	105	130	130	165	165	200	200	240	240

1) Values in brackets are valid for solid low speed shaft (see ch. 17(2)).

16.2 - Axial loads F_{a2} [lb] or radial loads F_{r2} [lb] on low speed shaft end

Chain drives

This drive is usually advised for low tip speeds (v ⩽ 0.5 ft/s with periodical lubrication, v ⩽ 1.5 ft/s with drop lubrication) and for this reason it is usually placed between gear reducer and machine. Compared with gear transmissions it offers the advantage of a high flexibility, allowing larger misalignements and higher distances among the shaft to be connected.

On the other hand, it is less suitable with alternate shock operations, in particular with high tip speed (shocks, noise, clearance worsening) and requires a specific maintenance as it is subjected to wear and periodic clearance taking up.

For the correct belt drive dimensioning refer to specific manufacturer's literature; as a rough guide, we can assume:

$$p \approx 0{,}5 \cdot D$$
$$d = p \cdot z / \pi$$

where:

p chain pitch

D diameter of gear reducer shaft end

d pinion pitch diameter

z pinion number of teeth

Keep in mind that the number of pinion teeth ***z***, except some particular cases, should be at least **17** (the numbers of teeth classically adopted are: 17, 19, 21, 23) and that the smaller the pitch, the quieter the chain;

As a rough guide, for a rapid evaluation of the radial load generated on the low speed shaft end of gear reducer by a chain drive, see the table including:

– the **pitch diameter** values ***d*** of pinion and the **maximum transmissible power**, for two pinion speeds, according to pitch ***p*** and teeth number ***z***

– the **maximum pinion width** b_{max}, the **mass** and the **maximum breaking load** R_R of chain, according to the pitch and to the chain (simple, double or triple).

No. teeth	Pitch ***p***																							
	1/2" (12,7)			**5/8"** (15,875)			**3/4"** (19,05)			**1"** (25,4)			**1 1/4"** (31,75)			**1 1/2"** (38,1)			**1 3/4"** (44,45)			**2"** (50,8)		
	d	P_{max}		*d*	P_{max}		*d*	P_{max}		*d*	P_{max}		*d*	P_{max}		*d*	P_{max}		*d*	P_{max}		*d*	P_{max}	
z	in	hp		in	hp		in	hp		in	hp		in	hp		in	hp		in	hp		in	hp	
		50 rpm	100 rpm		50 rpm	100 rpm		50 rpm	100 rpm		50 rpm	100 rpm		50 rpm	100 rpm		50 rpm	100 rpm		50 rpm	100 rpm		50 rpm	100 rpm
15	2.39	0.36	1.22	2.98	0.54	0.94	3.58	0.80	1.61	4.77	2.41	4.56	5.97	4.29	8.05	7.16	6.84	12.7	8.36	10.7	20.1	9.55	16.1	28.2
16	2.55	0.39	1.34	3.18	0.54	1.07	3.82	0.94	1.88	5.09	2.55	4.69	6.37	4.56	8.45	7.64	7.38	13.4	8.91	11.4	21.5	10.2	16.1	30.8
17	2.71	0.43	1.41	3.38	0.67	1.07	4.06	1.07	2.01	5.41	2.68	4.96	6.76	4.83	9.12	8.12	7.78	14.8	9.47	12.2	22.8	10.8	17.4	32.2
18	2.86	0.46	1.50	3.58	0.67	1.21	4.30	1.07	2.01	5.73	2.95	5.36	7.16	5.10	9.66	8.59	8.31	16.1	10.0	12.9	24.1	11.5	18.8	34.9
19	3.02	0.48	1.58	3.78	0.67	1.21	4.54	1.21	2.15	6.05	3.08	5.63	7.56	5.50	10.2	9.07	8.85	16.1	10.6	13.4	25.5	12.1	20.1	37.5
20	3.18	0.50	1.69	3.98	0.80	1.21	4.77	1.21	2.28	6.37	3.22	5.90	7.96	5.77	10.7	9.55	9.25	17.4	11.1	14.8	26.8	12.7	21.5	38.9
21	3.34	0.51	1.78	4.18	0.80	1.34	5.01	1.34	2.41	6.68	3.35	6.30	8.36	6.17	11.4	10.0	9.79	18.8	11.7	14.8	28.2	13.4	22.8	48.3
22	3.50	0.54	1.89	4.38	0.80	1.34	5.25	1.34	2.55	7.00	3.62	6.57	8.75	6.44	11.9	10.5	10.3	18.8	12.3	16.1	29.5	14.0	22.8	42.9
23	3.66	0.55	2.01	4.58	0.80	1.48	5.49	1.48	2.68	7.32	3.75	6.97	9.15	6.71	12.5	11.0	10.9	20.1	12.8	17.4	32.2	14.6	24.1	45.6
24	3.82	0.58	2.12	4.77	0.80	1.48	5.73	1.48	2.82	7.64	3.89	7.24	9.55	7.11	13.1	11.5	11.4	21.5	13.4	17.4	33.5	15.3	25.5	46.9
25	3.98	0.60	2.21	4.97	0.94	1.48	5.97	1.61	2.95	7.96	4.16	7.64	9.95	7.38	13.4	11.9	11.8	22.8	13.9	18.8	34.9	15.9	26.8	49.6
26	4.14	0.63	2.29	5.17	0.98	1.53	6.21	1.68	3.07	8.28	4.26	7.78	10.3	7.58	13.8	12.4	12.2	23.9	14.5	19.4	36.2	16.6	27.6	51.6
27	4.30	0.66	2.39	5.37	1.02	1.60	6.45	1.74	3.19	8.59	4.36	7.91	10.7	7.71	14.2	12.9	12.9	24.8	15.0	20.8	37.5	17.2	28.4	52.6
28	4.46	0.68	2.55	5.57	1.07	1.74	6.68	1.88	3.49	8.91	4.43	8.05	11.1	7.91	14.8	13.4	13.4	25.5	15.6	21.5	38.9	17.8	29.5	56.3
29	4.62	0.71	2.64	5.77	1.11	1.81	6.92	1.94	3.62	9.23	4.56	8.33	11.5	8.18	15.6	13.8	14.2	26.3	16.2	22.3	39.7	18.5	30.8	58.3
30	4.77	0.74	2.68	5.97	1.21	1.88	7.16	2.01	3.75	9.55	4.69	8.72	11.9	8.45	16.1	14.3	14.8	26.8	16.7	22.8	41.6	19.1	32.2	60.3

Pitch ***p*** in	Chain type **simple**			**double**			**triple**		
	b_{max} in	weight lbf / ft	R_R lbf	b_{max} in	weight lbf / ft	R_R lbf	b_{max} in	weight lbf / ft	R_R lbf
1/2	**0.94**	0.27	3 150	**1.54**	0.94	6 300	**2.09**	1.34	9 500
5/8	**1.06**	0.60	5 000	**1.73**	1.14	10 000	**2.40**	1.68	15 000
3/4	**1.18**	0.81	7 100	**2.05**	1.61	14 000	**2.80**	2.49	21 200
1	**1.81**	1.81	12 500	**3.11**	3.49	25 000	**4.37**	5.38	37 500
1¼	**1.97**	2.42	20 000	**3.58**	4.84	40 000	**5.04**	7.39	60 000
1½	**2.56**	4.50	28 000	**4.53**	9.07	56 000	**6.46**	14.1	85 000
1¾	**3.07**	5.58	40 000	**5.51**	11.4	80 000	**7.87**	16.8	118 000
2	**3.07**	7.06	50 000	**5.55**	14.1	100 000	**7.87**	21.5	150 000

16.2 - Axial loads F_{a2} [lb] or radial loads F_{r2} [lb] on low speed shaft end

Radial load F_{r2} for most common drives has the following value and angular position:

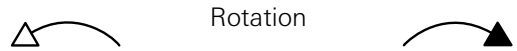

$$F_{r2} = \frac{126\,000 \cdot P_2}{d \cdot n_2} \text{ [lb]}$$

for chain drive (lifting in general); for timing belt drive replace 126 000 with 189 090

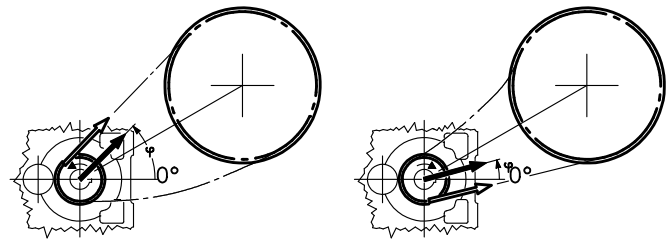

$$F_{r2} = \frac{315\,150 \cdot P_2}{d \cdot n_2} \text{ [lb]}$$

for V-belt drive

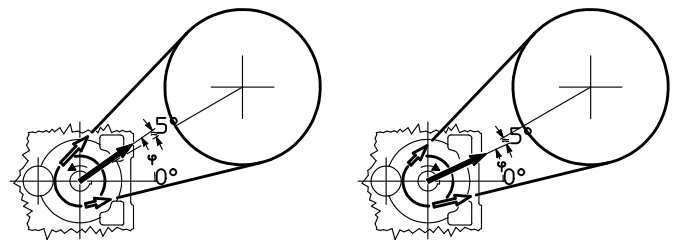

$$F_{r2} = \frac{134\,110 \cdot P_2}{d \cdot n_2} \text{ [lb]}$$

for spur gear pair drive

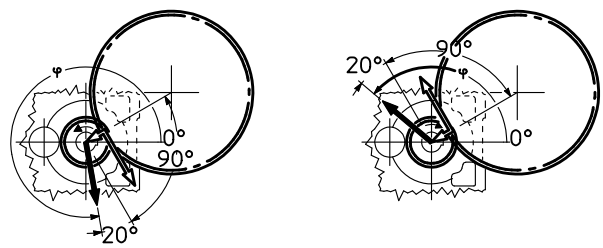

$$F_{r2} = \frac{447\,550 \cdot P_2}{d \cdot n_2} \text{ [lb]}$$

for friction wheel drive (rubber-on-metal)

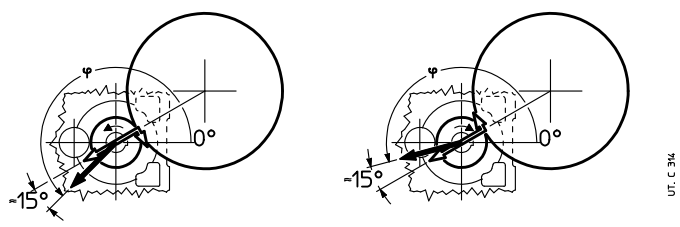

where: P_2 [hp] is power required at the output side of the gear reducer, n_2 [rpm] is the speed, d [in] is the pitch diameter.
IMPORTANT: 0° coincides with a straight line concurrent with the axis of the last reduction and orientated as shown above, and therefore it follows the rotation of the housing, as shown below.

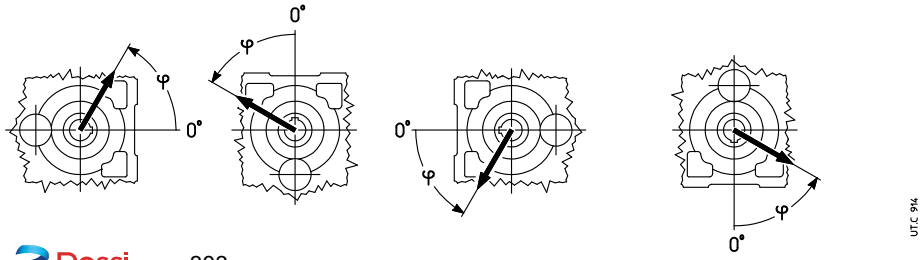

16.2 - Axial loads F_{a2} [lb] or radial loads F_{r2} [lb] on low speed shaft end

Radial load applied on **opposite side to groove**

Size **40**

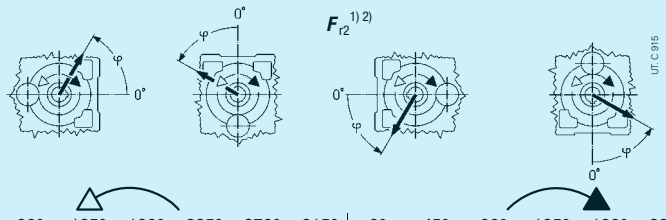

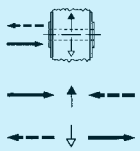

$n_2 \cdot L_h$	T_2	F_{r2} 1) 2)																F_{a2} 1)	
rpm · h	lb in	0°	45°	90°	135°	180°	225°	270°	315°	0°	45°	90°	135°	180°	225°	270°	315°		
355 000	710	500	500	500	500	500	500	500	500	500	500	500	500	500	500	500	500	180	355
	500	500	500	500	500	500	500	500	500	500	500	500	500	500	500	500	500	180	355
	355	500	500	500	500	500	500	500	500	500	500	500	500	500	500	500	500	180	355
450 000	710	500	500	500	500	500	500	500	500	500	475	500	500	500	500	500	500	180	355
	500	500	500	500	500	500	500	500	500	500	500	500	500	500	500	500	500	180	355
	355	500	500	500	500	500	500	500	500	500	500	500	500	500	500	500	500	180	355
560 000	710	500	500	500	500	500	475	475	500	475	450	475	500	500	500	500	500	180	355
	500	500	500	500	500	500	500	500	500	500	475	500	500	500	500	500	500	180	355
	355	500	500	500	500	500	500	500	500	500	500	500	500	500	500	500	500	180	355
710 000	710	500	500	500	500	500	450	425	450	425	400	425	500	500	500	500	500	160	335
	500	500	500	500	500	500	450	450	475	450	425	450	500	500	500	500	500	180	355
	355	500	500	500	500	500	475	475	500	475	450	475	500	500	500	500	500	180	355
900 000	710	475	500	450	425	450	400	375	425	375	355	375	450	500	500	500	475	118	300
	500	475	500	500	500	450	425	425	450	400	375	400	475	500	500	500	475	180	315
	355	475	500	500	500	475	450	425	450	425	425	425	475	500	500	500	475	180	335
1 120 000	710	450	500	335	315	425	355	355	375	355	315	335	425	500	450	425	425	90	265
	500	450	500	500	475	425	375	375	400	375	355	375	425	500	500	500	450	160	280
	355	450	475	475	475	425	400	400	425	400	375	400	450	475	500	475	450	180	300
1 400 000	500	425	475	475	450	400	355	355	375	355	335	335	400	475	500	475	400	125	265
	355	425	450	450	425	400	375	355	375	355	355	355	400	450	475	450	400	180	265
	250	425	450	450	425	400	375	375	400	375	355	375	400	450	450	450	400	180	300
1 800 000	500	375	425	450	400	355	315	315	335	315	300	315	355	425	475	425	375	106	224
	355	375	425	425	400	355	335	335	355	335	315	335	375	425	450	425	375	150	250
	250	375	400	400	400	375	355	355	355	355	335	335	375	400	425	400	375	180	250
2 240 000	500	355	400	355	335	335	300	300	315	300	265	280	335	400	425	400	335	80	200
	355	355	375	400	375	335	315	315	335	315	300	315	335	375	400	400	355	125	212
	250	355	375	375	355	335	335	315	335	315	315	315	355	375	400	375	355	160	236
2 800 000	355	335	355	375	355	315	300	280	300	280	265	280	315	355	375	355	315	112	190
	250	335	355	355	335	315	300	300	315	300	280	300	315	355	375	355	335	140	200
max		**500**																**180**	**355**

Size **50**

355 000	1 400	670	710	710	710	710	710	630	560	710	710	630	670	710	710	710	710	500	250
	1 000	710	710	710	710	710	710	710	670	710	710	710	710	710	710	710	710	500	250
	710	710	710	710	710	710	710	710	710	710	710	710	710	710	710	710	710	500	250
450 000	1 400	600	710	710	710	710	710	560	530	710	630	560	630	710	710	710	710	500	200
	1 000	670	710	710	710	710	710	630	600	710	670	630	670	710	710	710	710	500	250
	710	710	710	710	710	710	710	670	670	710	710	670	710	710	710	710	710	500	250
560 000	1 400	530	710	710	710	710	670	500	450	710	560	500	560	710	710	710	710	450	160
	1 000	600	710	710	710	710	710	560	530	710	630	600	630	710	710	710	710	475	250
	710	630	710	710	710	710	710	630	600	710	670	630	670	710	710	710	710	500	250
710 000	1 400	450	670	710	710	710	600	425	375	670	500	450	500	630	630	670	710	400	112
	1 000	530	670	710	710	710	630	500	475	670	560	530	560	670	710	710	710	425	224
	710	600	670	710	710	710	670	560	530	670	600	560	600	670	710	710	710	450	250
900 000	1 400	400	600	670	710	710	530	375	335	600	450	400	450	600	450	500	710	355	75
	1 000	475	630	710	710	710	600	450	425	630	530	475	500	600	710	710	710	375	180
	710	530	630	710	710	710	600	500	500	630	560	530	560	630	710	710	710	400	250
1 120 000	1 400	355	530	530	600	710	475	315	280	560	400	355	400	475	300	335	710	335	40
	1 000	425	560	710	710	670	530	425	400	600	475	425	475	560	710	710	710	375	140
	710	475	600	710	710	670	560	475	450	600	500	475	500	560	670	710	670	355	212
1 400 000	1 000	400	530	710	710	670	475	375	335	530	425	375	425	530	630	670	670	315	112
	710	450	560	670	710	630	500	425	400	530	475	425	450	530	630	670	630	335	180
	500	475	560	630	670	600	530	475	450	560	500	475	500	530	600	630	600	335	250
1 800 000	1 000	355	475	630	710	630	425	335	300	475	375	335	375	475	500	560	630	280	80
	710	400	500	630	670	600	475	375	355	500	425	375	400	475	600	630	600	300	150
	500	425	500	600	630	560	475	425	400	500	450	425	450	500	560	600	560	300	200
2 240 000	1 000	315	450	530	600	560	400	280	265	450	335	315	335	425	400	425	600	250	53
	710	355	475	600	630	560	425	335	315	475	375	355	375	450	530	600	560	265	118
	500	400	475	560	560	530	450	375	355	475	400	375	400	450	530	560	530	280	180
2 800 000	710	335	450	560	600	530	400	315	300	450	355	335	355	425	500	560	530	236	100
	500	375	450	530	560	500	425	355	335	450	375	355	375	425	500	530	500	250	160
max		**710**																**500**	**250**

1) An axial load of up to 0.2 times the value in the table is permissible, simultaneously with the radial load. If exceeded consult us.
2) For radial loads acting simultaneously on both sides consult us.

16.2 - Axial loads F_{a2} [lb] or radial loads F_{r2} [lb] on low speed shaft end

Radial load applied on **groove side** •

Size **40**

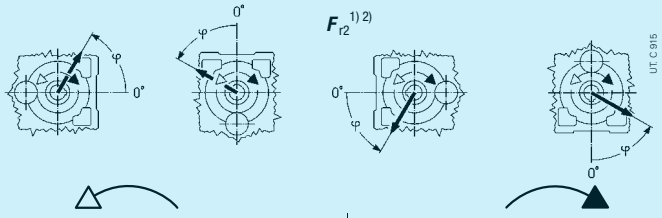

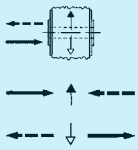

$n_2 \cdot L_h$	T_2	F_{r2} 1) 2)																F_{a2} 1)	
rpm · h	lb in	0°	45°	90°	135°	180°	225°	270°	315°	0°	45°	90°	135°	180°	225°	270°	315°		
355 000	710	425	500	500	500	500	475	335	315	500	375	355	425	500	500	500	500	180	355
	500	500	500	500	500	500	500	425	425	500	475	450	500	500	500	500	500	180	355
	355	500	500	500	500	500	500	500	500	500	500	500	500	500	500	500	500	180	355
450 000	710	355	500	500	500	500	425	300	280	475	335	315	375	500	500	500	500	180	355
	500	450	500	500	500	500	500	375	375	500	425	400	450	500	500	500	500	180	355
	355	500	500	500	500	500	500	450	450	500	475	450	500	500	500	500	500	180	355
560 000	710	315	500	500	500	500	355	236	236	425	280	265	335	500	500	500	500	180	355
	500	400	500	500	500	500	450	335	335	475	375	355	425	500	500	500	500	180	355
	355	450	500	500	500	500	500	400	400	500	425	400	475	500	500	500	500	180	355
710 000	710	265	500	500	500	500	315	200	190	355	236	224	300	475	500	500	500	160	335
	500	355	500	500	500	500	400	300	300	425	335	315	375	500	500	500	500	180	355
	355	425	500	500	500	500	450	355	355	475	375	375	425	500	500	500	500	180	355
900 000	710	212	450	500	500	500	265	160	150	315	200	180	236	425	500	500	500	118	300
	500	315	475	500	500	500	355	265	250	375	300	265	335	475	500	500	500	180	315
	355	375	500	500	500	500	400	315	315	425	335	335	375	475	500	500	500	180	335
1 120 000	710	170	400	500	500	500	212	118	112	280	170	150	200	400	500	500	500	90	265
	500	280	450	500	500	500	315	224	212	355	250	236	300	425	500	500	500	160	280
	355	335	450	500	500	500	355	300	280	375	315	300	335	450	500	500	500	180	300
1 400 000	500	250	400	500	500	475	280	190	180	315	224	200	265	400	500	500	500	125	265
	355	315	425	500	500	475	335	265	250	355	280	265	315	425	500	500	475	180	265
	250	335	425	500	300	450	355	315	300	375	315	315	335	425	500	500	450	180	300
1 800 000	500	200	375	500	500	425	236	160	150	280	190	170	224	355	500	500	450	106	224
	355	265	375	500	500	425	300	224	212	315	250	236	280	375	500	500	450	150	250
	250	315	400	475	500	425	335	265	265	335	300	280	315	375	450	475	425	180	250
2 240 000	500	170	335	500	500	400	200	125	118	250	160	140	190	335	500	500	425	80	200
	355	236	355	500	500	400	265	190	190	280	212	200	250	355	475	500	400	125	212
	250	280	355	450	475	400	300	250	236	315	265	250	280	355	425	450	400	160	236
2 800 000	355	212	335	475	475	375	236	180	160	265	190	180	224	315	450	475	375	112	190
	250	250	335	425	450	355	280	224	212	300	236	224	250	335	400	425	375	140	200
max		**500**																**180**	**355**

Size **50**

355 000	1 400	500	710	710	710	710	630	425	375	710	500	450	560	710	710	710	710	500	250
	1 000	630	710	710	710	710	710	560	530	710	630	600	670	710	710	710	710	500	250
	710	710	710	710	710	710	710	670	630	710	710	670	710	710	710	710	710	500	250
450 000	1 400	425	710	710	710	710	530	355	335	630	425	400	475	710	710	710	710	500	236
	1 000	560	710	710	710	710	670	500	475	710	560	530	600	710	710	710	710	500	250
	710	670	710	710	710	710	710	600	560	710	630	600	670	710	710	710	710	500	250
560 000	1 400	355	670	710	710	710	475	300	265	560	375	335	425	670	710	710	710	475	190
	1 000	500	710	710	710	710	600	450	400	670	500	450	530	710	710	710	710	500	250
	710	600	710	710	710	710	670	530	500	670	560	530	600	710	710	710	710	500	250
710 000	1 400	300	630	710	710	710	400	224	212	500	315	280	355	600	710	710	710	425	150
	1 000	450	670	710	710	710	530	375	355	600	450	400	475	670	710	710	710	450	250
	710	530	710	710	710	710	600	475	450	630	500	475	560	670	710	710	710	450	250
900 000	1 400	236	530	710	710	710	315	180	160	425	250	224	300	530	710	710	710	375	100
	1 000	375	630	710	710	710	475	335	300	530	375	355	425	600	710	710	710	400	200
	710	475	670	710	710	710	530	425	400	600	475	425	500	630	710	710	710	400	250
1 120 000	1 400	160	450	710	710	670	236	112	100	375	212	180	236	475	710	710	710	355	71
	1 000	335	560	710	710	710	425	280	265	475	335	315	375	560	710	710	710	355	170
	710	425	600	710	710	670	500	375	355	530	425	375	450	600	710	710	710	375	236
1 400 000	1 000	300	500	710	710	670	355	236	212	425	300	265	335	500	710	710	670	335	132
	710	375	560	710	710	630	450	335	315	475	375	335	400	530	710	710	670	335	200
	500	450	560	670	710	630	500	400	400	500	450	425	450	560	670	670	630	355	250
1 800 000	1 000	236	450	710	710	600	315	180	170	375	250	212	280	450	710	710	630	300	100
	710	335	500	710	710	600	400	280	265	425	335	300	355	500	670	710	600	315	160
	500	400	530	630	670	560	450	355	335	475	375	355	400	500	630	670	600	315	212
2 240 000	1 000	190	400	710	710	560	250	150	132	335	200	180	236	400	670	710	600	280	75
	710	300	475	670	710	560	355	250	236	400	300	265	315	450	630	670	560	280	132
	500	355	475	600	630	530	400	315	315	425	355	335	375	475	600	630	560	280	180
2 800 000	710	265	450	670	670	530	315	224	190	355	250	236	280	425	600	630	560	250	112
	500	335	450	560	600	500	375	300	280	400	335	300	335	450	560	600	530	265	160
max		**710**																**500**	**250**

1) An axial load of up to 0.2 times the value in the table is permissible, simultaneously with the radial load. If exceeded consult us.
2) For radial loads acting simultaneously on both sides consult us.

16.2 - Axial loads F_{a2} [lb] or radial loads F_{r2} [lb] on low speed shaft end

Radial load applied on **opposite side to groove**

Sizes **63, 64**

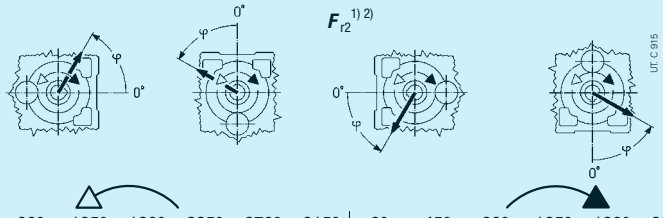

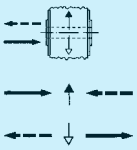

$n_2 \cdot L_h$	T_2	F_{r2} 1) 2)																F_{a2} 1)	
rpm · h	lb in	0°	45°	90°	135°	180°	225°	270°	315°	0°	45°	90°	135°	180°	225°	270°	315°		
1 120 000	2 800	1 120	1 120	1 120	1 120	1 120	1 120	1 120	1 120	1 120	1 120	1 120	1 120	1 120	1 120	1 120	1 120	400	800
	2 000	1 120	1 120	1 120	1 120	1 120	1 120	1 120	1 120	1 120	1 120	1 120	1 120	1 120	1 120	1 120	1 120	400	800
	1 400	1 120	1 120	1 120	1 120	1 120	1 120	1 120	1 120	1 120	1 120	1 120	1 120	1 120	1 120	1 120	1 120	400	800
	1 000	1 120	1 120	1 120	1 120	1 120	1 120	1 120	1 120	1 120	1 120	1 120	1 120	1 120	1 120	1 120	1 120	400	800
1 400 000	2 000	1 120	1 120	1 120	1 120	1 120	1 120	1 120	1 120	1 120	1 120	1 120	1 120	1 120	1 120	1 120	1 120	400	800
	1 400	1 120	1 120	1 120	1 120	1 120	1 120	1 120	1 120	1 120	1 120	1 120	1 120	1 120	1 120	1 120	1 120	400	800
	1 000	1 120	1 120	1 120	1 120	1 120	1 120	1 120	1 120	1 120	1 120	1 120	1 120	1 120	1 120	1 120	1 120	400	800
1 800 000	2 000	1 120	1 120	1 120	1 120	1 120	1 120	1 120	1 120	1 120	1 120	1 120	1 120	1 120	1 120	1 120	1 120	400	800
	1 400	1 120	1 120	1 120	1 120	1 120	1 120	1 120	1 120	1 120	1 120	1 120	1 120	1 120	1 120	1 120	1 120	400	800
	1 000	1 120	1 120	1 120	1 120	1 120	1 120	1 120	1 120	1 120	1 120	1 120	1 120	1 120	1 120	1 120	1 120	400	800
2 240 000	2 000	1 120	1 120	1 120	1 120	1 120	1 120	1 120	1 120	1 060	1 000	1 120	1 120	1 120	1 120	1 120	1 120	400	750
	1 400	1 120	1 120	1 120	1 120	1 120	1 120	1 120	1 120	1 120	1 120	1 120	1 120	1 120	1 120	1 120	1 120	400	750
	1 000	1 120	1 120	1 120	1 120	1 120	1 120	1 120	1 120	1 120	1 120	1 120	1 120	1 120	1 120	1 120	1 120	400	750
2 800 000	1 400	1 120	1 120	1 120	1 120	1 120	1 060	1 060	1 120	1 060	1 000	1 060	1 120	1 120	1 120	1 120	1 120	400	710
	1 000	1 120	1 120	1 120	1 120	1 120	1 120	1 120	1 120	1 120	1 060	1 120	1 120	1 120	1 120	1 120	1 120	400	710
3 550 000	1 400	1 120	1 120	1 120	1 120	1 060	1 000	1 000	1 060	950	950	950	1 120	1 120	1 120	1 120	1 060	400	670
	1 000	1 120	1 120	1 120	1 120	1 060	1 000	1 000	1 060	1 000	1 000	1 000	1 120	1 120	1 120	1 120	1 120	400	670
4 500 000	1 400	1 060	1 120	1 120	1 060	1 000	900	900	950	900	850	900	1 000	1 120	1 120	1 120	1 000	400	630
	1 000	1 060	1 120	1 120	1 060	1 000	950	950	1 000	950	900	950	1 000	1 120	1 120	1 120	1 000	400	630
5 600 000	1 400	1 000	1 060	1 060	1 000	900	850	850	900	850	800	850	950	1 060	1 120	1 060	950	355	600
	1 000	1 000	1 060	1 060	1 000	950	900	900	900	850	850	900	950	1 060	1 060	1 060	950	400	600
7 100 000	1 400	900	1 000	950	900	850	800	800	850	750	710	750	900	1 000	1 060	1 000	850	315	530
	1 000	900	950	950	950	850	850	800	850	800	800	800	900	950	1 000	950	900	400	530
max		**1 120**																**400**	**800**

Sizes **80, 81**

355 000	5 600	1 800	1 800	1 800	1 800	1 800	1 800	1 800	1 800	1 800	1 800	1 800	1 800	1 800	1 800	1 800	1 800	1 250	630
	4 000	1 800	1 800	1 800	1 800	1 800	1 800	1 800	1 800	1 800	1 800	1 800	1 800	1 800	1 800	1 800	1 800	1 250	630
	2 800	1 800	1 800	1 800	1 800	1 800	1 800	1 800	1 800	1 800	1 800	1 800	1 800	1 800	1 800	1 800	1 800	1 250	630
450 000	5 600	1 800	1 800	1 800	1 800	1 800	1 800	1 800	1 800	1 800	1 800	1 800	1 800	1 800	1 800	1 800	1 800	1 250	630
	4 000	1 800	1 800	1 800	1 800	1 800	1 800	1 800	1 800	1 800	1 800	1 800	1 800	1 800	1 800	1 800	1 800	1 250	630
	2 800	1 800	1 800	1 800	1 800	1 800	1 800	1 800	1 800	1 800	1 800	1 800	1 800	1 800	1 800	1 800	1 800	1 250	630
560 000	5 600	1 800	1 800	1 800	1 800	1 800	1 800	1 800	1 700	1 800	1 800	1 800	1 800	1 800	1 800	1 800	1 800	1 250	630
	4 000	1 800	1 800	1 800	1 800	1 800	1 800	1 800	1 800	1 800	1 800	1 800	1 800	1 800	1 800	1 800	1 800	1 250	630
	2 800	1 800	1 800	1 800	1 800	1 800	1 800	1 800	1 800	1 800	1 800	1 800	1 800	1 800	1 800	1 800	1 800	1 250	630
710 000	5 600	1 700	1 800	1 800	1 800	1 800	1 800	1 700	1 600	1 800	1 800	1 700	1 700	1 800	1 800	1 800	1 800	1 250	630
	4 000	1 800	1 800	1 800	1 800	1 800	1 800	1 800	1 700	1 800	1 800	1 800	1 800	1 800	1 800	1 800	1 800	1 250	630
	2 800	1 800	1 800	1 800	1 800	1 800	1 800	1 800	1 800	1 800	1 800	1 800	1 800	1 800	1 800	1 800	1 800	1 250	630
900 000	5 600	1 500	1 800	1 800	1 800	1 800	1 800	1 500	1 400	1 800	1 700	1 600	1 600	1 600	1 700	1 800	1 800	1 180	600
	4 000	1 700	1 800	1 800	1 800	1 800	1 800	1 700	1 600	1 800	1 800	1 700	1 700	1 800	1 800	1 800	1 800	1 250	630
	2 800	1 700	1 800	1 800	1 800	1 800	1 800	1 800	1 700	1 800	1 800	1 800	1 800	1 800	1 800	1 800	1 800	1 250	630
1 120 000	5 600	1 400	1 600	1 700	1 800	1 800	1 800	1 400	1 250	1 800	1 600	1 400	1 500	1 400	1 500	1 700	1 800	1 120	530
	4 000	1 500	1 800	1 800	1 800	1 800	1 800	1 500	1 400	1 800	1 700	1 600	1 600	1 700	1 800	1 800	1 800	1 120	630
	2 800	1 600	1 800	1 800	1 800	1 800	1 800	1 600	1 600	1 800	1 700	1 700	1 700	1 800	1 800	1 800	1 800	1 180	630
	2 000	1 700	1 800	1 800	1 800	1 800	1 800	1 700	1 600	1 800	1 800	1 700	1 700	1 800	1 800	1 800	1 800	1 180	630
1 400 000	4 000	1 400	1 700	1 800	1 800	1 800	1 700	1 400	1 320	1 800	1 600	1 400	1 400	1 600	1 700	1 800	1 800	1 060	630
	2 800	1 500	1 700	1 800	1 800	1 800	1 700	1 500	1 400	1 800	1 600	1 500	1 500	1 600	1 800	1 800	1 800	1 120	630
	2 000	1 600	1 700	1 800	1 800	1 800	1 700	1 600	1 500	1 700	1 600	1 600	1 600	1 700	1 800	1 800	1 800	1 120	630
1 800 000	4 000	1 250	1 500	1 700	1 800	1 800	1 500	1 250	1 180	1 700	1 400	1 320	1 320	1 400	1 500	1 600	1 800	950	560
	2 800	1 320	1 500	1 700	1 800	1 800	1 600	1 400	1 320	1 600	1 500	1 400	1 400	1 500	1 700	1 800	1 700	1 000	630
	2 000	1 400	1 600	1 700	1 800	1 700	1 600	1 400	1 400	1 600	1 500	1 400	1 400	1 500	1 600	1 700	1 700	1 000	630
2 240 000	4 000	1 180	1 400	1 500	1 700	1 700	1 400	1 180	1 120	1 500	1 320	1 180	1 250	1 250	1 320	1 500	1 600	900	500
	2 800	1 250	1 400	1 700	1 700	1 700	1 400	1 250	1 180	1 500	1 400	1 250	1 250	1 400	1 600	1 700	1 700	950	630
	2 000	1 320	1 400	1 600	1 700	1 600	1 500	1 320	1 250	1 500	1 400	1 320	1 320	1 400	1 500	1 600	1 600	950	630
2 800 000	2 800	1 180	1 320	1 500	1 700	1 600	1 320	1 180	1 120	1 400	1 250	1 180	1 180	1 320	1 400	1 500	1 500	900	600
	2 000	1 250	1 320	1 500	1 600	1 500	1 320	1 250	1 180	1 400	1 320	1 250	1 250	1 320	1 400	1 500	1 500	900	630
3 550 000	2 800	1 060	1 250	1 400	1 500	1 500	1 250	1 120	1 000	1 320	1 180	1 120	1 120	1 180	1 250	1 400	1 400	800	530
	2 000	1 120	1 250	1 400	1 500	1 400	1 250	1 120	1 120	1 320	1 180	1 180	1 180	1 250	1 320	1 400	1 400	850	630
4 500 000	2 800	1 000	1 180	1 250	1 400	1 400	1 180	1 000	950	1 250	1 120	1 000	1 000	1 120	1 180	1 250	1 320	750	450
	2 000	1 060	1 180	1 320	1 400	1 320	1 180	1 060	1 000	1 250	1 120	1 060	1 060	1 120	1 250	1 320	1 320	750	560
5 600 000	2 800	900	1 060	1 180	1 250	1 250	1 120	900	850	1 180	1 000	950	950	1 000	1 060	1 180	1 250	710	400
	2 000	950	1 120	1 250	1 250	1 250	1 120	1 000	950	1 120	1 060	1 000	1 000	1 060	1 180	1 250	1 250	710	500
7 100 000	2 800	850	1 000	1 060	1 180	1 180	1 000	850	800	1 060	950	850	900	900	950	1 060	1 180	630	355
	2 000	900	1 000	1 180	1 250	1 180	1 000	900	850	1 060	950	900	900	1 000	1 120	1 180	1 180	670	450
max		**1 800**																**1 250**	**630**

1) An axial load of up to 0.2 times the value in the table is permissible, simultaneously with the radial load. If exceeded consult us.
2) For radial loads acting simultaneously on both sides consult us.

16.2 - Axial loads F_{a2} [lb] or radial loads F_{r2} [lb] on low speed shaft end

Radial load applied on **groove side •**

Sizes **63, 64**

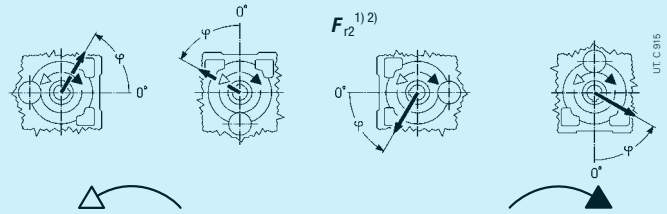

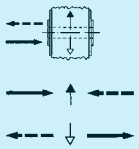

$n_2 \cdot L_h$	T_2	F_{r2} [1) 2)]																F_{a2} [1)]	
rpm · h	lb in	0°	45°	90°	135°	180°	225°	270°	315°	0°	45°	90°	135°	180°	225°	270°	315°		
1 120 000	2 800	1 120	1 120	1 120	1 120	1 120	1 120	1 060	1 120	1 120	950	1 000	1 120	1 120	1 120	1 120	1 120	400	800
	2 000	1 120	1 120	1 120	1 120	1 120	1 120	1 120	1 120	1 120	1 120	1 120	1 120	1 120	1 120	1 120	1 120	400	800
	1 400	1 120	1 120	1 120	1 120	1 120	1 120	1 120	1 120	1 120	1 120	1 120	1 120	1 120	1 120	1 120	1 120	400	800
	1 000	1 120	1 120	1 120	1 120	1 120	1 120	1 120	1 120	1 120	1 120	1 120	1 120	1 120	1 120	1 120	1 120	400	800
1 400 000	2 000	1 120	1 120	1 120	1 120	1 120	1 120	1 120	1 120	1 120	1 000	1 060	1 120	1 120	1 120	1 120	1 120	400	800
	1 400	1 120	1 120	1 120	1 120	1 120	1 120	1 120	1 120	1 120	1 120	1 120	1 120	1 120	1 120	1 120	1 120	400	800
	1 000	1 120	1 120	1 120	1 120	1 120	1 120	1 120	1 120	1 120	1 120	1 120	1 120	1 120	1 120	1 120	1 120	400	800
1 800 000	2 000	1 120	1 120	1 120	1 120	1 120	1 060	1 000	1 060	1 060	900	950	1 120	1 120	1 120	1 120	1 120	400	800
	1 400	1 120	1 120	1 120	1 120	1 120	1 120	1 120	1 120	1 120	1 060	1 060	1 120	1 120	1 120	1 120	1 120	400	800
	1 000	1 120	1 120	1 120	1 120	1 120	1 120	1 120	1 120	1 120	1 120	1 120	1 120	1 120	1 120	1 120	1 120	400	800
2 240 000	2 000	1 120	1 120	1 120	1 120	1 120	1 000	900	950	950	850	900	1 120	1 120	1 120	1 120	1 120	400	750
	1 400	1 120	1 120	1 120	1 120	1 120	1 060	1 000	1 060	1 060	950	1 000	1 120	1 120	1 120	1 120	1 120	400	750
	1 000	1 120	1 120	1 120	1 120	1 120	1 120	1 060	1 120	1 120	1 060	1 060	1 120	1 120	1 120	1 120	1 120	400	750
2 800 000	1 400	1 120	1 120	1 120	1 120	1 120	1 000	900	950	950	900	900	1 060	1 120	1 120	1 120	1 120	400	710
	1 000	1 120	1 120	1 120	1 120	1 120	1 060	1 000	1 060	1 060	950	1 000	1 120	1 120	1 120	1 120	1 120	400	710
3 550 000	1 400	1 060	1 120	1 120	1 120	1 060	900	850	900	900	800	850	1 000	1 120	1 120	1 120	1 120	400	670
	1 000	1 060	1 120	1 120	1 120	1 120	950	900	950	950	900	900	1 060	1 120	1 120	1 120	1 120	400	670
4 500 000	1 400	950	1 120	1 120	1 120	1 000	850	750	850	800	710	750	900	1 120	1 120	1 120	1 000	400	630
	1 000	1 000	1 120	1 120	1 120	1 000	900	850	900	900	800	850	950	1 120	1 120	1 120	1 060	400	630
5 600 000	1 400	900	1 120	1 120	1 120	950	750	710	750	750	630	670	850	1 120	1 120	1 120	950	355	600
	1 000	950	1 060	1 120	1 060	950	850	800	850	850	750	750	900	1 060	1 120	1 120	950	400	600
7 100 000	1 400	850	1 060	1 120	1 060	900	710	630	670	670	600	630	800	1 060	1 120	1 120	900	315	530
	1 000	850	1 000	1 060	1 000	900	750	710	750	750	670	710	850	1 000	1 120	1 060	900	400	530
max		**1 120**																**400**	**800**

Sizes **80, 81**

355 000	5 600	1 800	1 800	1 800	1 800	1 800	1 800	1 700	1 600	1 800	1 800	1 700	1 800	1 800	1 800	1 800	1 800	1 250	630
	4 000	1 800	1 800	1 800	1 800	1 800	1 800	1 800	1 800	1 800	1 800	1 800	1 800	1 800	1 800	1 800	1 800	1 250	630
	2 800	1 800	1 800	1 800	1 800	1 800	1 800	1 800	1 800	1 800	1 800	1 800	1 800	1 800	1 800	1 800	1 800	1 250	630
450 000	5 600	1 700	1 800	1 800	1 800	1 800	1 800	1 500	1 400	1 800	1 700	1 500	1 800	1 800	1 800	1 800	1 800	1 250	630
	4 000	1 800	1 800	1 800	1 800	1 800	1 800	1 800	1 700	1 800	1 800	1 800	1 800	1 800	1 800	1 800	1 800	1 250	630
	2 800	1 800	1 800	1 800	1 800	1 800	1 800	1 800	1 800	1 800	1 800	1 800	1 800	1 800	1 800	1 800	1 800	1 250	630
560 000	5 600	1 500	1 800	1 800	1 800	1 800	1 800	1 320	1 250	1 800	1 500	1 400	1 600	1 800	1 800	1 800	1 800	1 250	630
	4 000	1 800	1 800	1 800	1 800	1 800	1 800	1 600	1 500	1 800	1 700	1 600	1 800	1 800	1 800	1 800	1 800	1 250	630
	2 800	1 800	1 800	1 800	1 800	1 800	1 800	1 800	1 700	1 800	1 800	1 800	1 800	1 800	1 800	1 800	1 800	1 250	630
710 000	5 600	1 320	1 800	1 800	1 800	1 800	1 600	1 180	1 060	1 800	1 320	1 250	1 400	1 800	1 800	1 800	1 800	1 250	630
	4 000	1 600	1 800	1 800	1 800	1 800	1 800	1 400	1 320	1 800	1 600	1 500	1 700	1 800	1 800	1 800	1 800	1 250	630
	2 800	1 800	1 800	1 800	1 800	1 800	1 800	1 700	1 600	1 800	1 700	1 700	1 800	1 800	1 800	1 800	1 800	1 250	630
900 000	5 600	1 180	1 800	1 800	1 800	1 800	1 500	1 000	950	1 700	1 180	1 120	1 250	1 800	1 800	1 800	1 800	1 180	600
	4 000	1 400	1 800	1 800	1 800	1 800	1 700	1 250	1 250	1 800	1 400	1 320	1 500	1 800	1 800	1 800	1 800	1 250	630
	2 800	1 600	1 800	1 800	1 800	1 800	1 800	1 500	1 400	1 800	1 600	1 500	1 700	1 800	1 800	1 800	1 800	1 250	630
1 120 000	5 600	1 060	1 700	1 800	1 800	1 800	1 320	900	800	1 500	1 060	950	1 120	1 700	1 800	1 800	1 800	1 120	530
	4 000	1 320	1 800	1 800	1 800	1 800	1 500	1 180	1 120	1 700	1 320	1 180	1 320	1 800	1 800	1 800	1 800	1 120	630
	2 800	1 500	1 800	1 800	1 800	1 800	1 700	1 320	1 320	1 700	1 500	1 400	1 500	1 800	1 800	1 800	1 800	1 180	630
	2 000	1 600	1 800	1 800	1 800	1 800	1 700	1 500	1 500	1 800	1 600	1 500	1 600	1 800	1 800	1 800	1 800	1 180	630
1 400 000	4 000	1 180	1 700	1 800	1 800	1 800	1 400	1 060	1 000	1 500	1 180	1 120	1 250	1 700	1 800	1 800	1 800	1 060	630
	2 800	1 320	1 700	1 800	1 800	1 800	1 500	1 250	1 180	1 600	1 320	1 250	1 400	1 700	1 800	1 800	1 800	1 120	630
	2 000	1 500	1 700	1 800	1 800	1 800	1 600	1 400	1 320	1 700	1 400	1 400	1 500	1 700	1 800	1 800	1 800	1 120	630
1 800 000	4 000	1 060	1 500	1 800	1 800	1 800	1 250	900	850	1 400	1 060	950	1 120	1 500	1 800	1 800	1 800	950	560
	2 800	1 250	1 600	1 800	1 800	1 800	1 400	1 120	1 060	1 500	1 250	1 120	1 250	1 600	1 800	1 800	1 800	1 000	630
	2 000	1 320	1 600	1 800	1 800	1 800	1 500	1 250	1 180	1 500	1 320	1 250	1 320	1 600	1 800	1 800	1 800	1 000	630
2 240 000	4 000	950	1 400	1 800	1 800	1 800	1 120	850	750	1 250	950	900	1 000	1 400	1 800	1 800	1 800	900	500
	2 800	1 120	1 500	1 800	1 800	1 700	1 250	1 000	950	1 400	1 120	1 060	1 180	1 400	1 800	1 800	1 700	950	630
	2 000	1 250	1 500	1 800	1 800	1 700	1 320	1 180	1 120	1 400	1 250	1 180	1 250	1 500	1 700	1 800	1 700	950	630
2 800 000	2 800	1 000	1 400	1 800	1 800	1 600	1 180	950	900	1 250	1 000	950	1 060	1 320	1 700	1 800	1 600	900	600
	2 000	1 120	1 400	1 700	1 700	1 500	1 250	1 060	1 000	1 320	1 120	1 060	1 180	1 320	1 600	1 700	1 600	900	630
3 550 000	2 800	950	1 250	1 700	1 800	1 500	1 060	850	800	1 180	950	850	950	1 250	1 600	1 700	1 500	800	530
	2 000	1 060	1 250	1 600	1 600	1 400	1 180	950	950	1 250	1 060	1 000	1 060	1 250	1 500	1 600	1 400	850	630
4 500 000	2 800	850	1 180	1 600	1 700	1 400	1 000	750	710	1 060	850	800	900	1 120	1 500	1 600	1 400	750	450
	2 000	950	1 180	1 500	1 500	1 320	1 060	900	850	1 120	950	900	950	1 180	1 400	1 500	1 320	750	560
5 600 000	2 800	750	1 120	1 500	1 600	1 320	900	670	630	1 000	750	710	800	1 060	1 320	1 500	1 320	710	400
	2 000	900	1 120	1 400	1 500	1 250	1 000	800	750	1 060	900	850	900	1 120	1 320	1 400	1 250	710	500
7 100 000	2 800	670	1 000	1 400	1 500	1 250	850	600	530	900	670	630	710	1 000	1 250	1 400	1 250	630	355
	2 000	800	1 060	1 320	1 400	1 180	900	710	710	950	800	750	850	1 000	1 250	1 320	1 180	670	450
max		**1 800**																**1 250**	**630**

1) An axial load of up to 0.2 times the value in the table is permissible, simultaneously with the radial load. If exceeded consult us.
2) For radial loads acting simultaneously on both sides consult us.

16.2 - Axial loads F_{a2} [lb] or radial loads F_{r2} [lb] on low speed shaft end

Radial load applied on **opposite side to groove**

Size **100**

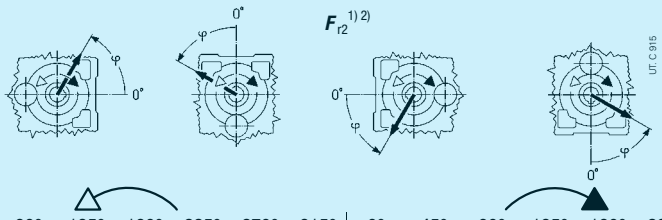

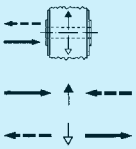

$n_2 \cdot L_h$	T_2	F_{r2} 1) 2)																F_{a2} 1)	
rpm · h	lb in	0°	45°	90°	135°	180°	225°	270°	315°	0°	45°	90°	135°	180°	225°	270°	315°		
355 000	11 200	2 800	2 800	2 800	2 800	2 800	2 800	2 800	2 800	2 650	2 500	2 800	2 800	2 800	2 800	2 800	2 800	1 000	2 000
	8 000	2 800	2 800	2 800	2 800	2 800	2 800	2 800	2 800	2 800	2 800	2 800	2 800	2 800	2 800	2 800	2 800	1 000	2 000
	5 600	2 800	2 800	2 800	2 800	2 800	2 800	2 800	2 800	2 800	2 800	2 800	2 800	2 800	2 800	2 800	2 800	1 000	2 000
450 000	11 200	2 800	2 800	2 800	2 650	2 650	2 650	2 650	2 800	2 500	2 360	2 500	2 800	2 800	2 800	2 800	2 800	1 000	2 000
	8 000	2 800	2 800	2 800	2 800	2 800	2 800	2 800	2 800	2 650	2 500	2 800	2 800	2 800	2 800	2 800	2 800	1 000	2 000
	5 600	2 800	2 800	2 800	2 800	2 800	2 800	2 800	2 800	2 800	2 800	2 800	2 800	2 800	2 800	2 800	2 800	1 000	2 000
560 000	11 200	2 800	2 800	2 800	2 360	2 240	2 360	2 360	2 650	2 240	2 120	2 360	2 800	2 800	2 800	2 800	2 500	1 000	2 000
	8 000	2 800	2 800	2 800	2 800	2 800	2 500	2 650	2 800	2 500	2 360	2 500	2 800	2 800	2 800	2 800	2 800	1 000	2 000
	5 600	2 800	2 800	2 800	2 800	2 800	2 650	2 650	2 800	2 650	2 500	2 650	2 800	2 800	2 800	2 800	2 800	1 000	2 000
710 000	11 200	2 800	2 800	2 500	2 120	2 000	2 120	2 240	2 500	2 000	1 900	2 120	2 650	2 800	2 800	2 360	2 240	850	1 900
	8 000	2 800	2 800	2 800	2 650	2 500	2 360	2 360	2 650	2 240	2 120	2 360	2 800	2 800	2 800	2 800	2 650	1 000	1 900
	5 600	2 800	2 800	2 800	2 800	2 650	2 500	2 500	2 650	2 360	2 360	2 500	2 800	2 800	2 800	2 800	2 650	1 000	2 000
900 000	11 200	2 800	2 500	2 240	1 800	1 700	1 800	2 000	2 360	1 900	1 700	1 900	2 500	2 800	2 500	2 120	1 900	710	1 700
	8 000	2 650	2 800	2 650	2 360	2 240	2 120	2 240	2 360	2 000	2 000	2 120	2 500	2 800	2 800	2 650	2 360	1 000	1 800
	5 600	2 650	2 800	2 800	2 650	2 360	2 240	2 240	2 500	2 240	2 120	2 240	2 650	2 800	2 800	2 800	2 500	1 000	1 900
1 120 000	11 200	2 500	2 240	1 800	1 600	1 400	1 500	1 900	2 120	1 700	1 600	1 800	2 360	2 500	2 240	1 900	1 600	560	1 600
	8 000	2 500	2 650	2 360	2 120	2 000	2 000	2 000	2 240	1 900	1 800	2 000	2 360	2 800	2 650	2 360	2 240	900	1 700
	5 600	2 500	2 650	2 650	2 500	2 240	2 120	2 120	2 240	2 000	2 000	2 120	2 360	2 650	2 800	2 650	2 360	1 000	1 700
	4 000	2 500	2 650	2 650	2 500	2 240	2 240	2 240	2 360	2 120	2 120	2 240	2 360	2 650	2 650	2 650	2 360	1 000	1 800
1 400 000	8 000	2 360	2 500	2 120	1 900	1 800	1 800	1 900	2 120	1 800	1 700	1 800	2 240	2 650	2 500	2 120	2 000	800	1 600
	5 600	2 360	2 500	2 500	2 360	2 120	2 000	2 000	2 120	1 900	1 800	1 900	2 240	2 500	2 650	2 500	2 120	1 000	1 600
	4 000	2 360	2 500	2 360	2 240	2 120	2 000	2 000	2 120	2 000	1 900	2 000	2 240	2 500	2 500	2 360	2 240	1 000	1 700
1 800 000	8 000	2 240	2 240	1 900	1 700	1 600	1 700	1 700	1 900	1 600	1 500	1 700	2 000	2 500	2 240	1 900	1 700	670	1 400
	5 600	2 240	2 360	2 240	2 120	1 900	1 800	1 800	2 000	1 700	1 700	1 800	2 120	2 360	2 500	2 360	2 000	950	1 500
	4 000	2 120	2 240	2 240	2 120	2 000	1 900	1 900	2 000	1 800	1 800	1 900	2 120	2 240	2 360	2 240	2 000	1 000	1 500
2 240 000	8 000	2 120	2 000	1 700	1 500	1 320	1 500	1 600	1 800	1 400	1 320	1 500	1 900	2 240	2 000	1 700	1 500	560	1 320
	5 600	2 000	2 240	2 000	1 900	1 800	1 700	1 700	1 800	1 600	1 500	1 700	1 900	2 240	2 360	2 120	1 900	850	1 400
	4 000	2 000	2 120	2 120	2 000	1 800	1 800	1 800	1 900	1 700	1 700	1 800	2 000	2 120	2 240	2 120	1 900	1 000	1 400
2 800 000	5 600	1 900	2 120	1 900	1 700	1 700	1 500	1 600	1 700	1 500	1 400	1 500	1 800	2 120	2 120	1 900	1 700	750	1 250
	4 000	1 900	2 000	2 000	1 900	1 700	1 600	1 700	1 800	1 600	1 500	1 600	1 800	2 000	2 120	2 000	1 800	950	1 320
3 550 000	5 600	1 800	1 900	1 700	1 500	1 400	1 400	1 400	1 600	1 320	1 250	1 400	1 700	2 000	1 900	1 700	1 600	670	1 180
	4 000	1 800	1 900	1 900	1 800	1 600	1 500	1 500	1 600	1 400	1 400	1 500	1 700	1 900	2 000	1 900	1 700	850	1 250
4 500 000	5 600	1 700	1 700	1 500	1 320	1 250	1 250	1 320	1 500	1 250	1 180	1 250	1 600	1 900	1 700	1 500	1 400	560	1 120
	4 000	1 700	1 800	1 800	1 600	1 500	1 400	1 400	1 500	1 320	1 250	1 400	1 600	1 800	1 900	1 800	1 500	750	1 120
5 600 000	5 600	1 600	1 600	1 400	1 180	1 120	1 180	1 180	1 320	1 120	1 060	1 180	1 500	1 800	1 600	1 400	1 250	500	1 000
	4 000	1 600	1 700	1 600	1 500	1 400	1 250	1 250	1 400	1 250	1 180	1 250	1 500	1 700	1 800	1 700	1 400	670	1 060
7 100 000	5 600	1 500	1 400	1 250	1 060	950	1 060	1 120	1 250	1 000	950	1 060	1 320	1 600	1 400	1 180	1 120	425	950
	4 000	1 400	1 600	1 400	1 320	1 250	1 180	1 180	1 250	1 120	1 060	1 180	1 400	1 600	1 600	1 500	1 320	600	950
max		**2 800**																**1 000**	**2 000**

1) An axial load of up to 0.2 times the value in the table is permissible, simultaneously with the radial load. If exceeded consult us.
2) For radial loads acting simultaneously on both sides consult us.

16.2 - Axial loads F_{a2} [lb] or radial loads F_{r2} [lb] on low speed shaft end

Radial load applied on **groove side •**

Size **100**

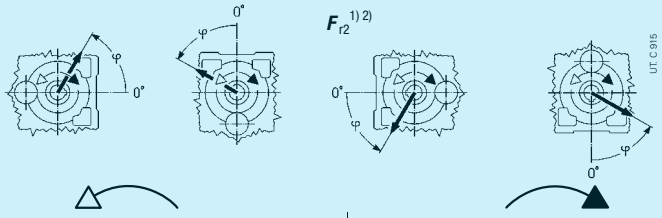

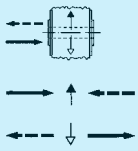

$n_2 \cdot L_h$	T_2	F_{r2} [1) 2)] 0°	45°	90°	135°	180°	225°	270°	315°	0°	45°	90°	135°	180°	225°	270°	315°	F_{a2} [1)]	
rpm · h	lb in																		
355 000	11 200	2 800	2 800	2 800	2 800	2 800	2 360	2 120	2 360	2 240	1 800	2 000	2 800	2 800	2 800	2 800	2 800	1 000	2 000
	8 000	2 800	2 800	2 800	2 800	2 800	2 650	2 500	2 650	2 650	2 240	2 360	2 800	2 800	2 800	2 800	2 800	1 000	2 000
	5 600	2 800	2 800	2 800	2 800	2 800	2 800	2 800	2 800	2 800	2 650	2 650	2 800	2 800	2 800	2 800	2 800	1 000	2 000
450 000	11 200	2 800	2 800	2 800	2 800	2 800	2 120	1 900	2 120	1 900	1 600	1 700	2 500	2 800	2 800	2 800	2 800	1 000	2 000
	8 000	2 800	2 800	2 800	2 800	2 800	2 500	2 240	2 360	2 360	2 000	2 120	2 800	2 800	2 800	2 800	2 800	1 000	2 000
	5 600	2 800	2 800	2 800	2 800	2 800	2 650	2 500	2 650	2 650	2 360	2 500	2 800	2 800	2 800	2 800	2 800	1 000	2 000
560 000	11 200	2 650	2 800	2 800	2 800	2 650	1 900	1 700	1 900	1 700	1 320	1 500	2 240	2 800	2 800	2 800	2 800	1 000	2 000
	8 000	2 800	2 800	2 800	2 800	2 800	2 240	2 000	2 240	2 120	1 800	1 900	2 500	2 800	2 800	2 800	2 800	1 000	2 000
	5 600	2 800	2 800	2 800	2 800	2 800	2 500	2 240	2 500	2 360	2 120	2 240	2 650	2 800	2 800	2 800	2 800	1 000	2 000
710 000	11 200	2 360	2 800	2 800	2 800	2 360	1 700	1 500	1 700	1 500	1 180	1 250	2 000	2 800	2 800	2 800	2 500	850	1 900
	8 000	2 500	2 800	2 800	2 800	2 650	2 000	1 800	2 000	1 900	1 600	1 700	2 360	2 800	2 800	2 800	2 650	1 000	1 900
	5 600	2 650	2 800	2 800	2 800	2 650	2 240	2 120	2 240	2 240	1 900	2 000	2 500	2 800	2 800	2 800	2 800	1 000	2 000
900 000	11 200	2 240	2 800	2 800	2 800	2 000	1 500	1 250	1 500	1 250	950	1 120	1 800	2 800	2 800	2 800	2 240	710	1 700
	8 000	2 360	2 800	2 800	2 800	2 360	1 800	1 700	1 800	1 700	1 400	1 500	2 120	2 800	2 800	2 800	2 500	1 000	1 800
	5 600	2 500	2 800	2 800	2 800	2 500	2 120	1 900	2 000	2 000	1 800	1 900	2 360	2 800	2 800	2 800	2 500	1 000	1 900
1 120 000	11 200	2 000	2 800	2 800	2 500	1 800	1 320	1 120	1 250	1 060	800	900	1 600	2 800	2 800	2 800	2 000	560	1 600
	8 000	2 240	2 800	2 800	2 800	2 240	1 700	1 500	1 700	1 500	1 250	1 400	1 900	2 800	2 800	2 800	2 240	900	1 700
	5 600	2 240	2 800	2 800	2 800	2 360	1 900	1 800	1 900	1 800	1 600	1 700	2 120	2 800	2 800	2 800	2 360	1 000	1 700
	4 000	2 360	2 650	2 800	2 650	2 360	2 000	1 900	2 000	2 000	1 800	1 900	2 240	2 650	2 800	2 800	2 360	1 000	1 800
1 400 000	8 000	2 000	2 800	2 800	2 500	2 120	1 500	1 320	1 500	1 320	1 120	1 180	1 800	2 650	2 800	2 800	2 120	800	1 600
	5 600	2 120	2 650	2 800	2 650	2 120	1 800	1 600	1 700	1 700	1 400	1 500	2 000	2 650	2 800	2 800	2 240	1 000	1 600
	4 000	2 240	2 500	2 650	2 500	2 240	1 900	1 800	1 900	1 900	1 700	1 800	2 120	2 500	2 800	2 650	2 240	1 000	1 700
1 800 000	8 000	1 800	2 650	2 650	2 360	1 800	1 320	1 120	1 250	1 180	950	1 060	1 600	2 500	2 800	2 650	1 900	670	1 400
	5 600	1 900	2 500	2 800	2 500	2 000	1 600	1 400	1 600	1 500	1 250	1 400	1 800	2 500	2 800	2 650	2 000	950	1 500
	4 000	2 000	2 360	2 500	2 360	2 000	1 700	1 600	1 700	1 700	1 500	1 600	1 900	2 360	2 650	2 500	2 120	1 000	1 500
2 240 000	8 000	1 700	2 360	2 500	2 120	1 600	1 180	1 000	1 180	1 060	800	900	1 400	2 360	2 800	2 360	1 800	560	1 320
	5 600	1 800	2 360	2 650	2 360	1 900	1 400	1 250	1 400	1 320	1 120	1 250	1 700	2 360	2 800	2 500	1 900	850	1 400
	4 000	1 900	2 240	2 360	2 240	1 900	1 600	1 500	1 600	1 600	1 400	1 400	1 800	2 240	2 500	2 360	1 900	1 000	1 400
2 800 000	5 600	1 700	2 240	2 360	2 120	1 700	1 320	1 180	1 250	1 250	1 000	1 120	1 500	2 120	2 650	2 360	1 800	750	1 250
	4 000	1 800	2 120	2 240	2 120	1 800	1 500	1 320	1 400	1 400	1 250	1 320	1 700	2 120	2 360	2 240	1 800	950	1 320
3 550 000	5 600	1 600	2 120	2 240	2 000	1 600	1 180	1 060	1 180	1 120	900	1 000	1 400	2 000	2 500	2 240	1 600	670	1 180
	4 000	1 600	2 000	2 120	2 000	1 700	1 320	1 250	1 320	1 250	1 120	1 180	1 500	2 000	2 240	2 120	1 700	850	1 250
4 500 000	5 600	1 400	1 900	2 000	1 800	1 500	1 060	950	1 060	950	800	850	1 250	1 900	2 240	2 000	1 500	560	1 120
	4 000	1 500	1 900	2 000	1 900	1 500	1 250	1 120	1 180	1 180	1 000	1 060	1 400	1 800	2 120	2 000	1 600	750	1 120
5 600 000	5 600	1 320	1 800	1 900	1 700	1 320	950	850	950	850	670	750	1 120	1 800	2 120	1 900	1 400	500	1 000
	4 000	1 400	1 800	1 900	1 800	1 400	1 120	1 000	1 120	1 060	900	950	1 250	1 800	2 000	1 900	1 400	670	1 060
7 100 000	5 600	1 180	1 700	1 800	1 500	1 120	850	710	850	750	560	630	1 000	1 700	2 000	1 700	1 250	425	950
	4 000	1 250	1 700	1 800	1 700	1 320	1 000	900	1 000	950	800	900	1 180	1 700	1 900	1 800	1 320	600	950
max		**2 800**																**1 000**	**2 000**

1) An axial load of up to 0.2 times the value in the table is permissible, simultaneously with the radial load. If exceeded consult us.
2) For radial loads acting simultaneously on both sides consult us.

16.2 - Axial loads F_{a2} [lb] or radial loads F_{r2} [lb] on low speed shaft end

Radial load applied on **opposite side to groove**

Size **125**

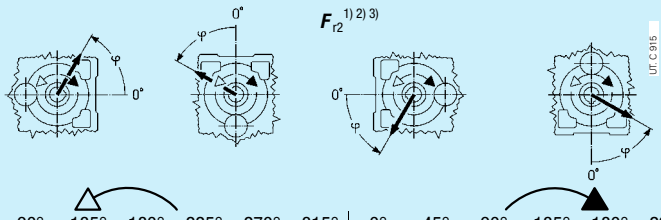

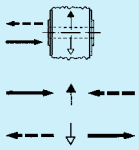

$n_2 \cdot L_h$	T_2	F_{r2} [1) 2) 3)] 0°	45°	90°	135°	180°	225°	270°	315°	0°	45°	90°	135°	180°	225°	270°	315°	F_{a2} [1)]	
rpm · h	lb in																		
355 000	22 400	4 500	4 500	4 500	4 500	4 500	4 500	4 500	4 250	4 500	4 500	4 500	4 500	4 500	4 500	4 500	4 500	3 150	1 600
	16 000	4 500	4 500	4 500	4 500	4 500	4 500	4 500	4 500	4 500	4 500	4 500	4 500	4 500	4 500	4 500	4 500	3 150	1 600
450 000	22 400	4 250	4 500	4 500	4 500	4 500	4 500	4 250	4 000	4 500	4 500	4 500	4 500	4 250	4 500	4 500	4 500	3 150	1 600
	16 000	4 500	4 500	4 500	4 500	4 500	4 500	4 500	4 250	4 500	4 500	4 500	4 500	4 500	4 500	4 500	4 500	3 150	1 600
560 000	22 400	3 750	4 250	4 500	4 500	4 500	4 500	4 000	3 550	4 500	4 500	4 000	4 000	3 750	4 000	4 500	4 500	3 150	1 500
	16 000	4 250	4 500	4 500	4 500	4 500	4 500	4 250	4 000	4 500	4 500	4 250	4 250	4 500	4 500	4 500	4 500	3 150	1 600
710 000	22 400	3 350	3 550	4 000	4 500	4 500	4 500	3 550	3 150	4 500	4 250	3 750	3 550	3 350	3 550	4 250	4 500	3 000	1 250
	16 000	3 750	4 500	4 500	4 500	4 500	4 500	4 000	3 550	4 500	4 250	4 000	4 000	4 250	4 500	4 500	4 500	3 000	1 600
900 000	22 400	3 150	3 150	3 550	4 250	4 500	4 250	3 350	3 000	4 500	3 750	3 350	3 150	2 800	3 150	3 550	4 250	2 650	1 060
	16 000	3 550	4 000	4 500	4 500	4 500	4 250	3 550	3 350	4 500	4 000	3 550	3 550	3 750	4 000	4 500	4 500	2 800	1 600
	11 200	3 750	4 250	4 500	4 500	4 500	4 250	3 750	3 550	4 500	4 000	3 750	3 750	4 000	4 500	4 500	4 500	2 800	1 600
1 120 000	22 400	2 800	2 650	3 150	3 750	4 250	4 000	3 000	2 650	4 250	3 550	3 150	2 650	2 360	2 650	3 350	3 750	2 500	850
	16 000	3 150	3 750	4 000	4 500	4 500	4 000	3 350	3 000	4 250	3 750	3 350	3 350	3 350	3 550	4 000	4 500	2 650	1 400
	11 200	3 350	3 750	4 500	4 500	4 500	4 000	3 550	3 350	4 250	3 750	3 550	3 550	3 750	4 250	4 500	4 500	2 650	1 600
1 400 000	16 000	3 000	3 350	3 550	4 000	4 500	3 750	3 150	2 800	4 000	3 350	3 150	3 150	3 150	3 150	3 550	4 000	2 360	1 180
	11 200	3 150	3 550	4 250	4 500	4 250	3 750	3 350	3 150	4 000	3 550	3 350	3 350	3 550	3 750	4 250	4 250	2 500	1 600
1 800 000	16 000	2 650	3 000	3 150	3 550	4 000	3 350	2 800	2 500	3 750	3 150	2 800	2 800	2 650	2 800	3 150	3 550	2 240	1 000
	11 200	3 000	3 350	3 750	4 250	4 000	3 550	3 000	2 800	3 550	3 350	3 150	3 000	3 150	3 550	3 750	4 000	2 240	1 400
2 240 000	16 000	2 500	2 650	2 800	3 350	3 750	3 150	2 500	2 240	3 550	3 000	2 650	2 500	2 240	2 500	3 000	3 350	2 120	900
	11 200	2 650	3 150	3 550	3 750	3 750	3 150	2 800	2 650	3 350	3 150	2 800	2 800	3 000	3 150	3 350	3 750	2 120	1 250
2 800 000	11 200	2 500	3 000	3 150	3 550	3 550	3 000	2 650	2 360	3 150	2 800	2 650	2 650	2 800	3 000	3 150	3 550	2 000	1 120
	8 000	2 650	3 000	3 350	3 550	3 350	3 150	2 650	2 500	3 150	3 000	2 800	2 800	3 000	3 150	3 350	3 350	2 000	1 400
3 550 000	11 200	2 240	2 650	3 000	3 150	3 350	2 800	2 360	2 120	3 000	2 650	2 360	2 360	2 500	2 650	2 800	3 150	1 800	1 000
	8 000	2 500	2 800	3 150	3 350	3 150	2 800	2 500	2 360	3 000	2 650	2 500	2 500	2 650	3 000	3 150	3 150	1 900	1 250
4 500 000	11 200	2 120	2 360	2 650	3 000	3 150	2 650	2 120	2 000	2 800	2 500	2 240	2 240	2 240	2 240	2 650	3 000	1 700	900
	8 000	2 240	2 500	3 000	3 150	3 000	2 650	2 360	2 120	2 800	2 500	2 360	2 360	2 500	2 800	3 000	3 000	1 700	1 120
5 600 000	11 200	1 900	2 120	2 360	2 650	3 000	2 500	2 000	1 800	2 650	2 240	2 000	2 000	1 900	2 000	2 360	2 650	1 600	750
	8 000	2 120	2 360	2 800	3 000	2 800	2 500	2 120	2 000	2 650	2 360	2 120	2 120	2 360	2 500	2 650	2 800	1 600	1 000
7 100 000	11 200	1 800	1 900	2 000	2 360	2 650	2 240	1 800	1 700	2 500	2 120	1 900	1 800	1 700	1 800	2 120	2 360	1 500	630
	8 000	1 900	2 240	2 500	2 800	2 650	2 240	2 000	1 800	2 360	2 120	2 000	2 000	2 120	2 240	2 500	2 650	1 500	900
max		**4 500**																**3 150**	**1 600**

Size **140**

280 000	33 500	6 300	6 300	6 300	6 300	6 300	6 300	6 300	6 000	6 300	6 300	6 300	6 300	6 300	6 300	6 300	6 300	4 000	2 000
	23 600	6 300	6 300	6 300	6 300	6 300	6 300	6 300	6 300	6 300	6 300	6 300	6 300	6 300	6 300	6 300	6 300	4 000	2 000
355 000	33 500	5 600	6 300	6 300	6 300	6 300	6 300	6 000	5 300	6 300	6 300	6 000	6 000	6 300	6 300	6 300	6 300	4 000	2 000
	23 600	6 300	6 300	6 300	6 300	6 300	6 300	6 300	6 000	6 300	6 300	6 300	6 300	6 300	6 300	6 300	6 300	4 000	2 000
450 000	33 500	5 300	6 300	6 300	6 300	6 300	6 300	5 300	4 750	6 300	6 000	5 600	5 600	5 600	6 000	6 300	6 300	4 000	2 000
	23 600	5 600	6 300	6 300	6 300	6 300	6 300	6 000	5 300	6 300	6 300	6 000	6 000	6 300	6 300	6 300	6 300	4 000	2 000
560 000	33 500	4 750	5 300	6 000	6 300	6 300	6 300	5 000	4 500	6 300	5 600	5 000	5 000	4 750	5 300	6 000	6 300	3 750	1 700
	23 600	5 300	6 000	6 300	6 300	6 300	6 300	5 300	5 000	6 300	6 000	5 300	5 300	6 000	6 300	6 300	6 300	4 000	2 000
710 000	33 500	4 250	4 750	5 300	6 300	6 300	5 600	4 500	4 000	6 300	5 300	4 500	4 500	4 250	5 600	4 500	4 000	3 550	1 400
	23 600	4 750	5 600	6 300	6 300	6 300	6 000	5 000	4 500	6 300	5 300	5 000	5 000	5 600	6 000	6 300	6 300	3 550	2 000
	17 000	5 000	5 600	6 300	6 300	6 300	6 000	5 300	5 000	6 000	5 600	5 300	5 300	5 600	6 300	6 300	6 300	3 750	2 000
900 000	33 500	4 000	4 000	4 750	5 600	6 000	5 300	4 000	3 550	6 000	4 750	4 250	3 750	3 550	4 000	4 750	5 300	3 350	1 120
	23 600	4 500	5 300	6 000	6 300	6 300	5 300	4 500	4 250	5 600	5 000	4 500	4 750	5 000	5 300	6 000	6 300	3 350	1 900
	17 000	4 750	5 300	6 000	6 300	6 300	5 600	4 750	4 500	5 600	5 300	4 750	4 750	5 300	5 600	6 300	6 000	3 350	2 000
1 120 000	23 600	4 000	5 000	5 300	6 000	6 000	5 000	4 250	3 750	5 300	4 750	4 250	4 250	4 500	4 750	5 300	6 000	3 150	1 700
	17 000	4 500	5 000	5 600	6 000	6 000	5 000	4 500	4 250	5 300	4 750	4 500	4 500	4 750	5 300	5 600	5 600	3 150	2 000
1 400 000	23 600	3 550	4 250	4 750	5 300	5 600	4 750	3 750	3 350	5 000	4 250	3 750	3 750	3 750	4 250	4 750	5 300	3 000	1 400
	17 000	4 000	4 750	5 300	5 600	5 300	4 750	4 000	3 750	5 000	4 500	4 000	4 250	4 500	5 000	5 300	5 300	3 000	1 900
1 800 000	23 600	3 350	3 750	4 250	4 750	5 300	4 250	3 350	3 150	4 750	4 000	3 550	3 550	3 350	3 750	4 250	4 750	2 650	1 180
	17 000	3 550	4 250	5 000	5 300	5 000	4 500	3 750	3 550	4 750	4 000	3 750	3 750	4 250	4 500	5 000	5 000	2 800	1 700
2 240 000	17 000	3 350	4 000	4 500	5 000	4 750	4 000	3 350	3 150	4 250	3 750	3 550	3 550	3 750	4 000	4 500	4 750	2 650	1 500
	11 800	3 550	4 000	4 500	4 750	4 750	4 250	3 550	3 550	4 250	4 000	3 750	3 750	4 000	4 250	4 750	4 500	2 650	1 900
2 800 000	17 000	3 150	3 750	4 250	4 500	4 500	3 750	3 150	3 000	4 000	3 550	3 150	3 150	3 550	3 550	4 000	4 500	2 360	1 320
	11 800	3 350	3 750	4 250	4 500	4 250	3 750	3 350	3 150	4 000	3 550	3 350	3 350	3 550	4 000	4 250	4 250	2 500	1 700
3 550 000	17 000	2 800	3 350	3 750	4 250	4 250	3 550	3 000	2 650	3 750	3 350	3 000	3 000	3 150	3 350	3 550	4 000	2 240	1 120
	11 800	3 150	3 550	4 000	4 250	4 000	3 550	3 150	3 000	3 750	3 350	3 150	3 150	3 350	3 750	4 000	4 000	2 240	1 500
4 500 000	17 000	2 650	3 150	3 350	3 750	4 000	3 350	2 650	2 360	3 550	3 000	2 800	2 800	2 800	3 000	3 350	3 550	2 000	1 000
	11 800	2 800	3 350	3 750	4 000	3 750	3 350	3 000	2 800	3 550	3 150	3 000	3 000	3 150	3 550	3 750	3 750	2 120	1 400
5 600 000	17 000	2 360	2 650	3 000	3 350	3 750	3 150	2 360	2 240	3 350	2 800	2 500	2 500	2 360	2 650	3 000	3 350	1 900	850
	11 800	2 650	3 000	3 550	3 750	3 550	3 150	2 650	2 500	3 350	3 000	2 650	2 650	3 000	3 150	3 550	3 550	2 000	1 180
max		**6 300** (**3 550** for «short side»)																**4 000**	**2 000**

1) An axial load of up to 0.2 times the value in the table is permissible, simultaneously with the radial load. If exceeded consult us.
2) For radial loads acting simultaneously on both sides consult us.
3) An unfavourable direction of load can limit F_{r2} to $0.9 \cdot F_{r2max}$.

16.2 - Axial loads F_{a2} [lb] or radial loads F_{r2} [lb] on low speed shaft end

Radial load applied on **groove side •**

Size **125**

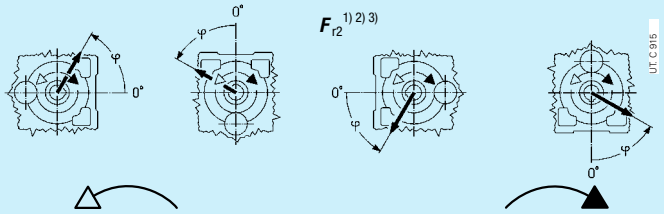

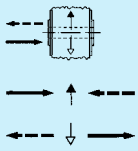

$n_2 \cdot L_h$	T_2	F_{r2} [1) 2) 3)]																F_{a2} [1)]	
rpm · h	lb in	0°	45°	90°	135°	180°	225°	270°	315°	0°	45°	90°	135°	180°	225°	270°	315°		
355 000	22 400	3 750	4 500	4 500	4 500	4 500	4 500	3 350	3 150	4 500	4 000	3 550	4 000	4 500	4 500	4 500	4 500	3 150	1 600
	16 000	4 500	4 500	4 500	4 500	4 500	4 500	4 000	3 750	4 500	4 500	4 250	4 500	4 500	4 500	4 500	4 500	3 150	1 600
450 000	22 400	3 350	4 500	4 500	4 500	4 500	4 250	3 000	2 800	4 500	3 550	3 150	3 550	4 500	4 500	4 500	4 500	3 150	1 600
	16 000	4 000	4 500	4 500	4 500	4 500	4 500	3 550	3 350	4 500	4 000	3 750	4 250	4 500	4 500	4 500	4 500	3 150	1 600
560 000	22 400	3 000	4 500	4 500	4 500	4 500	3 750	2 650	2 360	4 500	3 150	3 000	3 350	4 500	4 500	4 500	4 500	3 150	1 500
	16 000	3 550	4 500	4 500	4 500	4 500	4 250	3 350	3 150	4 500	3 750	3 350	3 750	4 500	4 500	4 500	4 500	3 150	1 600
710 000	22 400	2 650	4 250	4 500	4 500	4 500	3 350	2 240	2 000	4 000	3 000	2 500	3 000	3 750	4 500	4 500	4 500	3 000	1 250
	16 000	3 350	4 500	4 500	4 500	4 500	4 000	3 000	2 800	4 250	3 350	3 150	3 350	4 500	4 500	4 500	4 500	3 000	1 600
900 000	22 400	2 240	3 750	4 500	4 500	4 500	3 150	1 900	1 800	3 550	2 500	2 240	2 650	3 350	4 500	4 500	4 500	2 650	1 060
	16 000	3 000	4 250	4 500	4 500	4 500	3 550	2 650	2 500	4 000	3 150	2 800	3 150	4 000	4 500	4 500	4 500	2 800	1 600
	11 200	3 350	4 250	4 500	4 500	4 500	3 750	3 150	3 000	4 000	3 350	3 150	3 550	4 250	4 500	4 500	4 500	2 800	1 600
1 120 000	22 400	1 900	3 350	4 500	4 500	4 500	2 800	1 700	1 500	3 350	2 240	1 900	2 360	3 000	4 000	4 500	4 500	2 500	850
	16 000	2 650	3 750	4 500	4 500	4 500	3 350	2 360	2 240	3 550	2 800	2 500	2 800	3 750	4 500	4 500	4 500	2 650	1 400
	11 200	3 150	4 000	4 500	4 500	4 500	3 550	3 000	2 800	3 750	3 150	3 000	3 150	3 750	4 500	4 500	4 500	2 650	1 600
1 400 000	16 000	2 360	3 550	4 500	4 500	4 500	3 000	2 120	1 900	3 350	2 500	2 240	2 650	3 550	4 250	4 500	4 500	2 360	1 180
	11 200	2 800	3 750	4 500	4 500	4 500	3 350	2 650	2 500	3 550	3 000	2 800	3 000	3 550	4 500	4 500	4 500	2 500	1 600
1 800 000	16 000	2 000	3 150	4 500	4 500	4 250	2 650	1 800	1 700	3 150	2 240	2 000	2 240	3 150	3 750	4 500	4 250	2 240	1 000
	11 200	2 650	3 350	4 500	4 500	4 000	3 150	2 360	2 240	3 350	2 650	2 500	2 650	3 350	4 250	4 500	4 000	2 240	1 400
2 240 000	16 000	1 800	3 000	4 000	4 500	4 000	2 360	1 600	1 400	2 800	2 000	1 800	2 000	2 650	3 550	4 000	4 000	2 120	900
	11 200	2 360	3 150	4 250	4 500	3 750	2 800	2 120	2 000	3 150	2 360	2 240	2 500	3 150	4 000	4 250	3 750	2 120	1 250
2 800 000	11 200	2 120	3 000	4 000	4 250	3 550	2 650	1 900	1 800	2 800	2 240	2 000	2 240	3 000	3 550	4 000	3 550	2 000	1 120
	8 000	2 360	3 150	3 750	4 000	3 550	2 800	2 240	2 120	3 000	2 500	2 360	2 500	3 000	3 550	3 750	3 550	2 000	1 400
3 550 000	11 200	1 900	2 800	3 750	4 000	3 350	2 360	1 700	1 600	2 650	2 000	1 800	2 000	2 650	3 350	3 550	3 350	1 800	1 000
	8 000	2 240	2 800	3 550	3 750	3 350	2 500	2 000	1 900	2 650	2 240	2 120	2 240	2 800	3 350	3 550	3 350	1 900	1 250
4 500 000	11 200	1 700	2 500	3 350	3 750	3 150	2 120	1 500	1 400	2 360	1 800	1 600	1 800	2 500	3 000	3 350	3 150	1 700	900
	8 000	2 000	2 650	3 350	3 550	3 150	2 360	1 800	1 700	2 500	2 000	1 900	2 120	2 500	3 150	3 350	3 150	1 700	1 120
5 600 000	11 200	1 500	2 360	3 150	3 550	3 000	1 900	1 320	1 180	2 240	1 600	1 400	1 700	2 240	2 800	3 150	3 150	1 600	750
	8 000	1 800	2 500	3 150	3 350	3 000	2 120	1 700	1 600	2 360	1 900	1 700	1 900	2 360	3 000	3 150	3 000	1 600	1 000
7 100 000	11 200	1 320	2 120	2 800	3 150	2 800	1 700	1 120	1 060	2 000	1 400	1 250	1 500	1 900	2 500	3 000	2 800	1 500	630
	8 000	1 700	2 240	3 000	3 150	2 800	2 000	1 500	1 400	2 120	1 700	1 600	1 700	2 240	2 800	3 000	2 800	1 500	900
max		**4 500**																**3 150**	**1 600**

Size **140**

280 000	33 500	5 300	6 300	6 300	6 300	6 300	6 300	5 000	4 500	6 300	5 600	5 000	5 600	6 300	6 300	6 300	6 300	4 000	2 000
	23 600	6 300	6 300	6 300	6 300	6 300	6 300	5 600	5 600	6 300	6 300	6 000	6 300	6 300	6 300	6 300	6 300	4 000	2 000
355 000	33 500	4 750	6 300	6 300	6 300	6 300	6 000	4 250	4 000	6 300	5 000	4 500	5 300	6 300	6 300	6 300	6 300	4 000	2 000
	23 600	5 600	6 300	6 300	6 300	6 300	6 300	5 300	5 000	6 300	6 000	5 300	6 000	6 300	6 300	6 300	6 300	4 000	2 000
450 000	33 500	4 250	6 300	6 300	6 300	6 300	5 600	3 750	3 550	6 300	4 750	4 250	4 750	6 300	6 300	6 300	6 300	4 000	2 000
	23 600	5 300	6 300	6 300	6 300	6 300	6 000	4 750	4 500	6 300	5 300	5 000	5 300	6 300	6 300	6 300	6 300	4 000	2 000
560 000	33 500	3 750	6 000	6 300	6 300	6 300	5 000	3 350	3 150	5 600	4 250	3 550	4 250	5 600	6 300	6 300	6 300	3 750	1 700
	23 600	4 750	6 300	6 300	6 300	6 300	5 600	4 250	4 000	6 000	4 500	4 500	4 750	6 000	6 300	6 300	6 300	4 000	2 000
710 000	33 500	3 350	5 300	6 300	6 300	6 300	4 500	3 000	2 650	5 300	3 550	3 150	3 750	4 750	6 300	6 300	6 300	3 550	1 400
	23 600	4 250	5 600	6 300	6 300	6 300	5 000	3 750	3 550	5 600	4 500	4 000	4 500	5 600	6 300	6 300	6 300	3 550	2 000
	17 000	4 750	6 000	6 300	6 300	6 300	5 300	4 500	4 250	5 600	4 750	4 500	4 750	5 600	6 300	6 300	6 300	3 750	2 000
900 000	33 500	3 000	4 750	6 300	6 300	6 300	4 000	2 500	2 240	4 750	3 350	3 000	3 350	4 250	5 600	6 300	6 300	3 350	1 120
	23 600	3 750	5 300	6 300	6 300	6 300	4 750	3 350	3 150	5 000	4 000	3 550	4 000	5 300	6 300	6 300	6 300	3 350	1 900
	17 000	4 250	5 600	6 300	6 300	6 300	5 000	4 000	3 750	5 300	4 500	4 250	4 500	5 300	6 300	6 300	6 300	3 350	2 000
1 120 000	23 600	3 350	5 000	6 300	6 300	6 300	4 250	3 150	2 800	4 750	3 550	3 350	3 550	4 750	6 000	6 300	6 300	3 150	1 700
	17 000	4 000	5 000	6 300	6 300	6 000	4 750	3 750	3 550	5 000	4 000	3 750	4 000	5 000	6 000	6 300	6 000	3 150	2 000
1 400 000	23 600	3 000	4 500	6 000	6 300	5 600	3 750	2 800	2 500	4 250	3 150	3 000	3 350	4 500	5 300	6 000	6 000	3 000	1 400
	17 000	3 550	4 750	6 000	6 300	5 600	4 250	3 350	3 150	4 500	3 750	3 350	3 750	4 500	5 600	6 000	5 600	3 000	1 900
1 800 000	23 600	2 650	4 250	5 600	6 300	5 300	3 550	2 360	2 240	4 000	3 000	2 650	3 000	3 750	4 750	5 600	5 600	2 650	1 180
	17 000	3 350	4 500	5 600	6 000	5 300	3 750	3 000	2 800	4 250	3 350	3 150	3 350	4 250	5 300	6 000	5 300	2 800	1 700
2 240 000	17 000	3 000	4 000	5 300	6 000	5 000	3 550	2 800	2 500	4 000	3 150	2 800	3 150	4 000	5 000	5 300	5 000	2 650	1 500
	11 800	3 350	4 250	5 000	5 300	4 750	3 750	3 150	3 000	4 000	3 350	3 150	3 350	4 000	4 750	5 000	4 750	2 650	1 900
2 800 000	17 000	2 650	3 750	5 000	5 600	4 750	3 350	2 360	2 240	3 550	2 800	2 500	3 000	3 550	4 500	5 000	4 750	2 360	1 320
	11 800	3 150	3 750	4 750	5 000	4 500	3 550	3 000	2 800	3 750	3 150	3 000	3 150	3 750	4 500	4 750	4 500	2 500	1 700
3 550 000	17 000	2 360	3 350	4 750	5 300	4 250	3 000	2 120	2 000	3 350	2 500	2 240	2 650	3 350	4 000	4 750	4 500	2 240	1 120
	11 800	2 800	3 550	4 500	4 750	4 250	3 150	2 650	2 500	3 350	3 000	2 650	3 000	3 350	4 250	4 500	4 250	2 240	1 500
4 500 000	17 000	2 120	3 150	4 250	4 750	4 000	2 800	1 900	1 800	3 150	2 240	2 000	2 360	3 150	3 750	4 250	4 250	2 000	1 000
	11 800	2 650	3 350	4 250	4 500	4 000	3 000	2 360	2 240	3 150	2 650	2 500	2 650	3 350	4 000	4 250	4 000	2 120	1 400
5 600 000	17 000	1 900	3 000	3 750	4 500	3 750	2 500	1 700	1 500	2 800	2 000	1 800	2 120	2 800	3 350	4 000	3 750	1 900	850
	11 800	2 240	3 150	4 000	4 250	3 550	2 800	2 120	2 000	3 000	2 360	2 240	2 500	3 000	3 750	4 000	3 750	2 000	1 180
max		**6 300** (**3 550** for «short side»)																**4 000**	**2 000**

1) An axial load of up to 0.2 times the value in the table is permissible, simultaneously with the radial load. If exceeded consult us.
2) For radial loads acting simultaneously on both sides consult us.
3) An unfavourable direction of load can limit F_{r2} to $0.9 \cdot F_{r2max}$.

16.2 - Axial loads F_{a2} [lb] or radial loads F_{r2} [lb] on low speed shaft end

Radial load applied on **opposite side to groove**

Size **160**

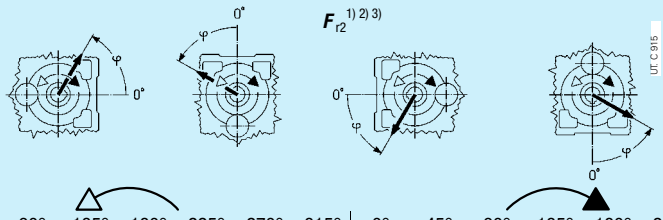

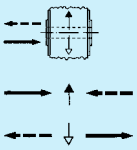

$n_2 \cdot L_h$	T_2	F_{r2} [1) 2) 3)] 0°	45°	90°	135°	180°	225°	270°	315°	0°	45°	90°	135°	180°	225°	270°	315°	F_{a2} [1)]	
rpm · h	lb in																		
280 000	50 000	8 000	8 000	8 000	7 500	7 500	7 100	7 100	7 500	6 700	6 300	6 700	8 000	8 000	8 000	8 000	8 000	2 500	5 000
	35 500	8 000	8 000	8 000	8 000	8 000	7 500	7 500	8 000	7 100	6 700	7 100	8 000	8 000	8 000	8 000	8 000	2 500	5 000
355 000	50 000	8 000	8 000	7 500	6 700	6 300	6 300	6 300	7 100	6 000	5 600	6 300	7 500	8 000	8 000	7 500	7 100	2 500	5 000
	35 500	8 000	8 000	8 000	8 000	7 100	6 700	6 700	7 100	6 700	6 300	6 700	7 500	8 000	8 000	8 000	7 500	2 500	5 000
450 000	50 000	7 500	7 500	6 700	6 000	5 600	6 000	6 000	6 300	5 600	5 300	5 600	7 100	8 000	7 500	6 700	6 300	2 360	4 750
	35 500	7 500	8 000	8 000	7 500	6 700	6 300	6 300	6 700	6 000	6 000	6 300	8 000	8 000	8 000	7 100	7 100	2 500	4 750
560 000	50 000	7 100	7 100	6 000	5 300	5 000	5 300	5 300	6 000	5 000	4 750	5 300	6 300	7 500	7 100	6 000	5 300	2 000	4 250
	35 500	7 100	7 500	7 100	6 700	6 300	5 600	5 600	6 300	5 600	5 300	5 600	6 700	7 500	8 000	7 100	6 300	2 500	4 500
710 000	50 000	6 700	6 300	5 000	4 500	4 250	4 500	5 000	5 600	4 500	4 250	4 750	6 000	6 700	6 300	5 300	4 750	1 700	4 000
	35 500	6 300	7 100	6 300	6 000	5 600	5 300	5 300	5 600	5 000	4 750	5 300	6 300	7 100	7 100	6 700	6 000	2 500	4 250
	25 000	6 300	7 100	7 100	6 300	6 000	5 600	5 600	6 000	5 600	5 300	5 600	6 300	7 100	7 100	6 700	6 000	2 500	4 250
900 000	50 000	6 300	5 600	4 250	3 750	3 550	3 750	4 500	5 000	4 250	3 750	4 250	5 600	6 300	5 600	4 500	4 000	1 320	3 550
	35 500	6 300	6 700	6 000	5 300	5 300	5 000	5 000	5 300	4 750	4 500	4 750	5 600	6 700	6 700	6 000	5 600	2 240	3 750
	25 000	6 000	6 300	6 300	6 000	5 600	5 300	5 300	5 600	5 000	4 750	5 000	6 000	6 700	6 700	6 300	5 600	2 500	4 000
1 120 000	35 500	5 600	6 000	5 300	4 750	4 500	4 500	4 500	5 000	4 250	4 000	4 500	5 300	6 300	6 000	5 300	5 000	1 900	3 550
	25 000	5 600	6 000	6 300	5 600	5 300	4 750	4 750	5 300	4 750	4 500	4 750	5 300	6 300	6 300	6 000	5 300	2 500	3 750
1 400 000	35 500	5 300	5 300	4 750	4 250	4 000	4 000	4 000	4 500	3 750	3 550	4 000	5 000	6 000	5 300	4 750	4 500	1 700	3 350
	25 000	5 300	5 600	5 600	5 000	4 750	4 500	4 500	4 750	4 250	4 000	4 250	5 000	5 600	6 000	5 600	5 000	2 240	3 350
1 800 000	35 500	5 000	5 000	4 250	3 750	3 550	3 750	3 750	4 250	3 550	3 350	3 550	4 750	5 300	4 750	4 250	3 750	1 400	3 150
	25 000	5 000	5 300	5 000	4 750	4 500	4 000	4 000	4 500	4 000	3 750	4 000	4 750	5 600	5 600	5 300	4 500	2 000	3 150
2 240 000	25 000	4 750	5 000	4 750	4 250	4 000	3 750	3 750	4 000	3 550	3 350	3 750	4 500	5 000	5 000	4 750	4 250	1 800	3 000
	18 000	4 500	5 000	5 000	4 500	4 250	4 000	4 000	4 250	3 750	3 750	4 000	4 500	5 000	5 300	4 750	4 250	2 240	3 150
2 800 000	25 000	4 250	4 750	4 250	3 750	3 550	3 350	3 350	3 750	3 350	3 150	3 350	4 000	4 750	4 750	4 250	4 000	1 600	2 800
	18 000	4 250	4 500	4 500	4 250	3 750	3 550	3 550	3 750	3 550	3 350	3 550	4 000	4 750	4 750	4 500	4 000	2 000	2 800
3 550 000	25 000	4 000	4 250	3 750	3 350	3 150	3 150	3 150	3 550	3 000	2 800	3 150	3 750	4 500	4 250	3 750	3 550	1 320	2 500
	18 000	4 000	4 250	4 250	4 000	3 550	3 350	3 350	3 550	3 350	3 150	3 350	3 750	4 250	4 500	4 250	3 750	1 800	2 650
4 500 000	25 000	3 750	3 750	3 350	3 000	2 800	3 000	3 000	3 150	2 800	2 650	2 800	3 550	4 250	3 750	3 350	3 150	1 180	2 360
	18 000	3 750	4 000	4 000	3 550	3 350	3 150	3 150	3 350	3 000	3 000	3 150	3 550	4 000	4 250	4 000	3 350	1 600	2 500
5 600 000	25 000	3 550	3 350	3 000	2 650	2 500	2 650	2 650	3 000	2 500	2 360	2 650	3 350	3 750	3 350	3 000	2 800	1 000	2 120
	18 000	3 550	3 750	3 550	3 350	3 150	3 000	3 000	3 150	2 800	2 650	2 800	3 350	3 750	4 000	3 550	3 150	1 400	2 240
max		**8 000**																**2 500**	**5 000**

Size **180**

280 000	71 000	10 000	10 000	10 000	10 000	10 000	9 500	9 000	10 000	9 000	8 500	9 000	10 000	10 000	10 000	10 000	10 000	3 150	6 300
	50 000	10 000	10 000	10 000	10 000	10 000	10 000	9 500	10 000	9 500	9 000	9 500	10 000	10 000	10 000	10 000	10 000	3 150	6 300
355 000	71 000	10 000	10 000	10 000	9 500	9 000	8 500	8 500	9 500	8 000	7 500	8 000	10 000	10 000	10 000	10 000	10 000	3 150	6 300
	50 000	10 000	10 000	10 000	10 000	10 000	9 000	9 000	9 500	9 000	8 000	9 000	10 000	10 000	10 000	10 000	10 000	3 150	6 300
450 000	71 000	10 000	10 000	10 000	9 000	8 000	8 000	8 000	8 500	7 500	7 100	7 500	9 500	10 000	10 000	10 000	9 000	3 150	6 300
	50 000	10 000	10 000	10 000	10 000	9 000	8 500	8 500	9 000	8 500	8 000	8 500	9 500	10 000	10 000	10 000	9 500	3 150	6 300
560 000	71 000	9 500	10 000	9 000	8 000	7 100	7 100	7 100	8 000	6 700	6 300	7 100	8 500	10 000	10 000	9 000	8 000	2 650	5 600
	50 000	9 500	10 000	10 000	9 500	8 500	8 000	7 500	8 500	7 500	7 100	7 500	9 000	10 000	10 000	10 000	9 000	3 150	6 000
710 000	71 000	9 000	9 000	8 000	6 700	6 300	6 300	6 300	7 500	6 300	5 600	6 300	8 000	9 500	9 000	8 000	6 700	2 240	5 300
	50 000	9 000	9 500	9 500	8 500	8 000	7 100	7 100	7 500	7 100	6 300	7 100	8 500	10 000	10 000	9 500	8 000	3 150	5 600
	35 500	9 000	9 500	9 500	9 000	8 000	7 500	7 500	8 000	7 500	7 100	7 500	8 500	9 500	10 000	9 500	8 500	3 150	5 600
900 000	71 000	8 500	8 000	6 700	6 000	5 300	5 600	6 000	6 700	5 600	5 000	5 600	7 500	9 000	8 000	7 100	6 000	1 900	4 750
	50 000	8 500	9 000	8 500	7 500	7 500	6 700	6 300	7 100	6 300	6 000	6 300	7 500	9 500	9 500	8 500	7 500	3 000	5 000
	35 500	8 500	9 000	9 000	8 500	7 500	7 100	7 100	7 500	6 700	6 300	7 100	8 000	9 000	9 500	9 000	8 000	3 150	5 300
1 120 000	50 000	7 500	8 500	8 000	7 100	6 700	6 000	6 000	6 700	6 000	5 300	6 000	7 100	9 000	8 500	8 000	7 100	2 650	4 750
	35 500	7 500	8 500	8 500	8 000	7 100	6 300	6 300	7 100	6 300	6 000	6 300	7 500	8 500	9 000	8 500	7 100	3 150	5 000
1 400 000	50 000	7 100	7 500	7 100	6 300	5 600	5 600	5 600	6 000	5 300	4 750	5 300	6 700	8 500	8 000	7 100	6 300	2 240	4 250
	35 500	7 100	8 000	8 000	7 500	6 300	6 000	6 000	6 300	5 600	5 300	6 000	6 700	8 000	8 500	8 000	6 700	3 000	4 500
1 800 000	50 000	6 700	7 100	6 300	5 600	5 000	5 000	5 000	5 600	4 750	4 500	5 000	6 300	8 000	7 100	6 300	5 600	1 900	4 000
	35 500	6 700	7 500	7 100	6 700	6 000	5 600	5 600	6 000	5 300	5 000	5 300	6 300	7 500	8 000	7 500	6 300	2 650	4 250
2 240 000	35 500	6 300	7 100	6 700	6 000	5 600	5 000	5 000	5 600	5 000	4 500	5 000	6 000	7 100	7 500	6 700	6 000	2 360	3 750
	25 000	6 300	6 700	6 700	6 300	5 600	5 300	5 300	5 600	5 300	5 000	5 300	6 000	6 700	7 100	6 700	6 000	3 000	4 000
2 800 000	35 500	6 000	6 300	6 000	5 600	5 300	4 750	4 500	5 000	4 500	4 250	4 500	5 600	6 700	6 700	6 000	5 300	2 120	3 550
	25 000	6 000	6 300	6 300	6 000	5 300	5 000	5 000	5 300	4 750	4 500	4 750	5 600	6 300	6 700	6 300	5 600	2 650	3 750
3 550 000	35 500	5 300	6 000	5 300	5 000	4 500	4 250	4 250	4 750	4 000	3 750	4 000	5 000	6 300	6 000	5 600	5 000	1 800	3 350
	25 000	5 300	6 000	6 000	5 600	5 000	4 500	4 500	4 750	4 500	4 250	4 500	5 300	6 000	6 300	6 000	5 000	2 360	3 350
4 500 000	35 500	5 000	5 600	5 000	4 500	4 000	4 000	3 750	4 250	3 750	3 350	3 750	4 750	6 000	5 600	5 000	4 500	1 600	3 150
	25 000	5 000	5 600	5 600	5 300	4 750	4 250	4 250	4 500	4 000	3 750	4 250	4 750	5 600	6 000	5 600	4 750	2 120	3 150
5 600 000	35 500	4 750	5 000	4 500	3 750	3 550	3 550	3 550	4 000	3 350	3 150	3 350	4 500	5 600	5 000	4 500	4 000	1 320	2 800
	25 000	4 750	5 300	5 000	4 750	4 250	3 750	3 750	4 250	3 750	3 550	3 750	4 500	5 300	5 600	5 300	4 500	1 900	3 000
max		**10 000** (**5 600** for «short side»)																**3 150**	**6 300**

1) An axial load of up to 0.2 times the value in the table is permissible, simultaneously with the radial load. If exceeded consult us.
2) For radial loads acting simultaneously on both sides consult us.
3) An unfavourable direction of load can limit F_{r2} to $0.5 \cdot F_{r2max}$.

16.2 - Axial loads F_{a2} [lb] or radial loads F_{r2} [lb] on low speed shaft end

Radial load applied on **groove side •**

Size **160**

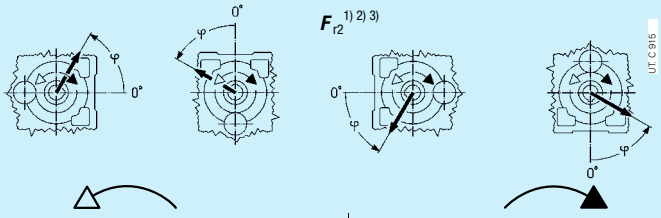

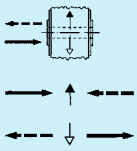

$n_2 \cdot L_h$	T_2	F_{r2} [1) 2) 3)]																F_{a2} [1)]	
rpm · h	lb in	0°	45°	90°	135°	180°	225°	270°	315°	0°	45°	90°	135°	180°	225°	270°	315°		
280 000	50 000	7 500	8 000	8 000	8 000	8 000	5 600	5 000	5 600	5 300	4 250	4 750	6 300	8 000	8 000	8 000	8 000	2 500	5 000
	35 500	8 000	8 000	8 000	8 000	8 000	6 300	6 000	6 300	6 300	5 300	5 600	7 100	8 000	8 000	8 000	8 000	2 500	5 000
355 000	50 000	6 700	8 000	8 000	8 000	7 100	5 000	4 500	4 750	4 750	3 750	4 000	6 000	8 000	8 000	8 000	7 500	2 500	5 000
	35 500	7 100	8 000	8 000	8 000	7 500	6 000	5 300	5 600	5 600	4 750	5 300	6 700	8 000	8 000	8 000	7 500	2 500	5 000
450 000	50 000	6 300	8 000	8 000	8 000	6 700	4 500	3 750	4 250	4 000	3 150	3 550	5 300	8 000	8 000	8 000	6 700	2 360	4 750
	35 500	6 700	8 000	8 000	8 000	7 100	5 300	4 750	5 300	5 300	4 500	4 750	6 000	8 000	8 000	8 000	7 100	2 500	4 750
560 000	50 000	5 600	8 000	8 000	7 500	6 000	4 000	3 350	3 750	3 550	2 800	3 000	4 750	8 000	8 000	8 000	6 300	2 000	4 250
	35 500	6 300	8 000	8 000	8 000	6 300	5 000	4 250	4 750	4 750	3 750	4 250	5 600	8 000	8 000	8 000	6 700	2 500	4 500
710 000	50 000	5 000	7 500	8 000	7 100	5 000	3 550	3 000	3 350	3 000	2 240	2 500	4 000	7 500	8 000	8 000	5 600	1 700	4 000
	35 500	5 600	7 500	8 000	7 500	6 000	4 500	3 750	4 250	4 250	3 350	3 550	5 000	7 500	8 000	8 000	6 300	2 500	4 250
	25 000	6 000	7 100	8 000	7 500	6 300	5 000	4 500	5 000	5 000	4 250	4 500	5 600	7 100	8 000	8 000	6 300	2 500	4 250
900 000	50 000	4 500	7 100	7 500	6 300	4 500	3 150	2 500	3 000	2 500	1 900	2 120	3 550	7 100	8 000	7 100	5 000	1 320	3 550
	35 500	5 300	7 100	8 000	7 100	5 600	4 000	3 550	3 750	3 750	3 000	3 350	4 500	7 100	8 000	8 000	5 600	2 240	3 750
	25 000	5 600	6 700	7 500	7 100	5 600	4 500	4 250	4 500	4 500	3 750	4 000	5 000	6 700	8 000	7 500	6 000	2 500	4 000
1 120 000	35 500	4 750	6 700	7 100	6 300	5 000	3 550	3 150	3 350	3 350	2 650	3 000	4 250	6 300	8 000	7 100	5 300	1 900	3 550
	25 000	5 000	6 300	7 100	6 700	5 300	4 250	3 750	4 000	4 000	3 350	3 550	4 750	6 300	7 500	7 100	5 600	2 500	3 750
1 400 000	35 500	4 250	6 300	6 700	6 000	4 750	3 150	2 650	3 150	3 000	2 240	2 500	3 550	6 000	7 500	6 700	4 750	1 700	3 350
	25 000	4 750	6 000	6 700	6 300	5 000	3 750	3 350	3 550	3 550	3 150	3 350	4 250	6 000	7 100	6 700	5 000	2 240	3 350
1 800 000	35 500	4 000	6 000	6 300	5 300	4 250	2 800	2 360	2 650	2 500	1 900	2 120	3 350	5 600	7 100	6 000	4 500	1 400	3 150
	25 000	4 250	5 600	6 300	6 000	4 500	3 550	3 150	3 350	3 350	2 800	3 000	4 000	5 600	6 700	6 300	4 750	2 000	3 150
2 240 000	25 000	4 000	5 300	6 000	5 300	4 250	3 150	2 800	3 150	3 000	2 500	2 650	3 550	5 300	6 300	6 000	4 250	1 800	3 000
	18 000	4 250	5 000	5 600	5 300	4 250	3 550	3 150	3 350	3 350	3 000	3 150	4 000	5 000	6 000	5 600	4 500	2 240	3 150
2 800 000	25 000	3 550	5 000	5 600	5 000	3 750	2 800	2 500	2 800	2 650	2 120	2 360	3 150	5 000	6 000	5 600	4 000	1 600	2 800
	18 000	3 750	4 750	5 300	5 000	4 000	3 150	3 000	3 150	3 150	2 650	2 800	3 550	4 750	5 600	5 300	4 250	2 000	2 800
3 550 000	25 000	3 350	4 750	5 000	4 500	3 550	2 500	2 240	2 500	2 360	1 900	2 000	3 000	4 500	5 600	5 000	3 550	1 320	2 500
	18 000	3 550	4 500	5 000	4 750	3 750	3 000	2 650	2 800	2 800	2 360	2 650	3 350	4 500	5 300	5 000	3 750	1 800	2 650
4 500 000	25 000	3 150	4 500	4 750	4 250	3 350	2 240	1 900	2 240	2 120	1 600	1 800	2 650	4 250	5 300	4 750	3 350	1 180	2 360
	18 000	3 350	4 250	4 750	4 500	3 350	2 650	2 360	2 650	2 650	2 240	2 360	3 000	4 250	5 000	4 750	3 550	1 600	2 500
5 600 000	25 000	2 800	4 250	4 500	3 750	3 000	2 000	1 700	1 900	1 800	1 320	1 500	2 360	4 000	4 750	4 250	3 150	1 000	2 120
	18 000	3 150	4 000	4 500	4 250	3 150	2 500	2 120	2 360	2 360	1 900	2 000	2 800	4 000	4 750	4 500	3 350	1 400	2 240
max		**8 000**																**2 500**	**5 000**

Size **180**

280 000	71 000	10 000	10 000	10 000	10 000	10 000	8 000	7 100	7 500	7 500	6 000	6 700	9 000	10 000	10 000	10 000	10 000	3 150	6 300
	50 000	10 000	10 000	10 000	10 000	10 000	9 000	8 500	9 000	9 000	7 500	8 000	10 000	10 000	10 000	10 000	10 000	3 150	6 300
355 000	71 000	9 500	10 000	10 000	10 000	9 500	7 100	6 300	7 100	6 700	5 300	5 600	8 500	10 000	10 000	10 000	10 000	3 150	6 300
	50 000	10 000	10 000	10 000	10 000	10 000	8 500	7 500	8 000	8 000	6 700	7 100	9 000	10 000	10 000	10 000	10 000	3 150	6 300
450 000	71 000	8 500	10 000	10 000	10 000	9 000	6 300	5 600	6 300	6 000	4 750	5 000	7 500	10 000	10 000	10 000	9 000	3 150	6 300
	50 000	9 000	10 000	10 000	10 000	9 500	7 500	6 700	7 500	7 100	6 300	6 700	8 500	10 000	10 000	10 000	9 500	3 150	6 300
560 000	71 000	8 000	10 000	10 000	10 000	8 500	5 600	4 750	5 600	5 000	4 000	4 500	6 700	10 000	10 000	10 000	8 500	2 650	5 600
	50 000	8 500	10 000	10 000	10 000	9 000	6 700	6 300	6 700	6 300	5 600	6 000	7 500	10 000	10 000	10 000	9 000	3 150	6 000
710 000	71 000	7 100	10 000	10 000	9 500	7 100	5 000	4 250	4 750	4 500	3 350	3 750	6 000	10 000	10 000	10 000	7 500	2 240	5 300
	50 000	8 000	10 000	10 000	10 000	8 000	6 300	5 600	6 000	6 000	4 750	5 300	7 100	10 000	10 000	10 000	8 500	3 150	5 600
	35 500	8 000	9 500	10 000	10 000	8 500	7 100	6 300	6 700	6 700	6 000	6 300	7 500	9 500	10 000	10 000	8 500	3 150	5 600
900 000	71 000	6 300	9 500	10 000	8 500	6 300	4 500	3 550	4 250	3 750	2 800	3 150	5 300	9 500	10 000	10 000	7 100	1 900	4 750
	50 000	7 100	9 500	10 000	9 500	7 500	5 600	5 000	5 600	5 300	4 250	4 750	6 300	9 500	10 000	10 000	7 500	3 000	5 000
	35 500	7 500	9 000	10 000	9 500	8 000	6 300	6 000	6 300	6 300	5 300	5 600	7 100	9 000	10 000	10 000	8 000	3 150	5 300
1 120 000	50 000	6 700	9 000	10 000	9 000	7 100	5 000	4 500	5 000	4 750	3 750	4 250	6 000	9 000	10 000	10 000	7 100	2 650	4 750
	35 500	7 100	8 500	9 500	9 000	7 100	6 000	5 300	5 600	5 600	4 750	5 300	6 300	8 500	10 000	9 500	7 500	3 150	5 000
1 400 000	50 000	6 000	8 500	9 000	8 000	6 300	4 500	3 750	4 500	4 000	3 350	3 550	5 300	8 500	10 000	9 000	6 300	2 240	4 250
	35 500	6 300	8 000	9 000	8 500	6 700	5 300	4 750	5 300	5 000	4 250	4 500	6 000	8 000	9 500	9 000	6 700	3 000	4 500
1 800 000	50 000	5 600	8 000	8 500	7 500	6 000	4 000	3 350	3 750	3 550	2 800	3 150	4 750	8 000	9 500	8 500	6 000	1 900	4 000
	35 500	6 000	7 500	8 500	8 000	6 300	4 750	4 250	4 750	4 500	3 750	4 250	5 600	7 500	9 000	8 500	6 300	2 650	4 250
2 240 000	35 500	5 600	7 100	8 000	7 500	5 600	4 500	3 750	4 250	4 250	3 350	3 750	5 000	7 100	8 500	8 000	6 000	2 360	3 750
	25 000	5 600	7 100	7 500	7 100	6 000	5 000	4 500	4 750	4 750	4 250	4 500	5 300	7 100	8 000	7 500	6 000	3 000	4 000
2 800 000	35 500	5 000	6 700	7 500	6 700	5 300	4 000	3 550	3 750	3 750	3 150	3 350	4 500	6 700	8 000	7 500	5 600	2 120	3 550
	25 000	5 300	6 300	7 100	6 700	5 600	4 500	4 000	4 500	4 500	3 750	4 000	5 000	6 300	7 500	7 100	5 600	2 650	3 750
3 550 000	35 500	4 750	6 300	7 100	6 300	5 000	3 550	3 150	3 350	3 350	2 650	3 000	4 000	6 300	7 500	7 100	5 000	1 800	3 350
	25 000	5 000	6 300	6 700	6 300	5 000	4 000	3 750	4 000	4 000	3 350	3 550	4 500	6 000	7 100	6 700	5 300	2 360	3 350
4 500 000	35 500	4 250	6 000	6 300	5 600	4 500	3 150	2 800	3 150	3 000	2 360	2 500	3 750	6 000	7 100	6 300	4 750	1 600	3 150
	25 000	4 500	5 600	6 300	6 000	4 750	3 750	3 350	3 550	3 550	3 150	3 350	4 250	5 600	6 700	6 300	4 750	2 120	3 150
5 600 000	35 500	3 750	5 600	6 000	5 300	4 000	2 800	2 500	2 800	2 500	2 000	2 240	3 350	5 600	6 700	6 000	4 250	1 320	2 800
	25 000	4 250	5 300	6 000	5 600	4 500	3 350	3 150	3 350	3 350	2 800	3 000	3 750	5 300	6 300	6 000	4 500	1 900	3 000
max		**10 000** (**5 600** for «short side»)																**3 150**	**6 300**

1) An axial load of up to 0.2 times the value in the table is permissible, simultaneously with the radial load. If exceeded consult us.
2) For radial loads acting simultaneously on both sides consult us.
3) An unfavourable direction of radial load limit F_{r2} to $0.3 \cdot F_{r2max}$.

16.2 - Axial loads F_{a2} [lb] or radial loads F_{r2} [lb] on low speed shaft end

Radial load applied on **opposite side to groove**

Size **200**

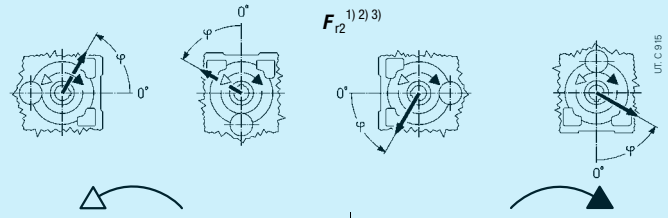

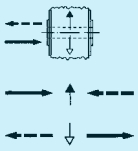

$n_2 \cdot L_h$	T_2	F_{r2} [1) 2) 3)]																F_{a2} [1)]	
rpm · h	lb in	0°	45°	90°	135°	180°	225°	270°	315°	0°	45°	90°	135°	180°	225°	270°	315°		
280 000	100 000	10 600	12 500	12 500	12 500	12 500	12 500	11 200	10 000	12 500	12 500	11 200	11 200	11 200	11 800	12 500	12 500	8 000	4 000
	71 000	11 800	12 500	12 500	12 500	12 500	12 500	11 800	11 200	12 500	12 500	11 800	11 800	12 500	12 500	12 500	12 500	8 000	4 000
355 000	100 000	10 000	11 200	12 500	12 500	12 500	12 500	10 000	9 000	12 500	11 800	10 600	10 600	10 000	10 600	12 500	12 500	8 000	3 750
	71 000	10 600	12 500	12 500	12 500	12 500	12 500	11 200	10 000	12 500	11 800	11 200	11 200	11 800	12 500	12 500	12 500	8 000	4 000
450 000	100 000	9 000	9 500	11 200	12 500	12 500	11 800	9 500	8 500	12 500	10 600	9 500	9 500	9 000	9 500	11 200	12 500	7 500	3 150
	71 000	10 000	11 200	12 500	12 500	12 500	11 800	10 000	9 500	12 500	11 200	10 000	10 000	11 200	11 800	12 500	12 500	7 500	4 000
560 000	100 000	8 000	8 500	9 500	11 200	12 500	10 600	8 500	7 500	11 800	10 000	9 000	8 000	7 500	8 500	9 500	11 200	7 100	2 650
	71 000	9 000	10 600	11 800	12 500	12 500	11 200	9 500	8 500	11 800	10 000	9 500	9 500	10 000	10 600	11 800	12 500	7 100	4 000
710 000	100 000	7 500	7 100	8 500	10 000	11 200	10 000	7 500	6 700	10 600	9 000	8 000	6 700	6 300	7 100	8 500	10 000	6 300	2 120
	71 000	8 500	10 000	10 600	11 800	11 800	10 000	8 500	8 000	11 200	9 500	8 500	8 500	9 000	9 500	10 600	11 800	6 700	3 550
	50 000	9 000	10 000	11 200	11 800	11 800	10 600	9 000	8 500	10 600	10 000	9 000	9 000	10 000	10 600	11 200	11 200	6 700	4 000
900 000	100 000	6 000	6 000	7 100	9 000	10 000	9 500	7 100	6 300	9 500	8 500	7 500	5 600	5 300	6 000	7 500	9 000	6 000	1 700
	71 000	7 500	9 000	9 500	10 600	11 200	9 500	8 000	7 100	10 000	9 000	8 000	8 000	8 000	8 500	9 500	10 600	6 300	3 150
	50 000	8 500	9 500	10 600	11 200	11 200	9 500	8 500	8 000	10 000	9 000	8 500	8 500	9 000	10 000	10 600	10 600	6 300	4 000
1 120 000	71 000	7 100	8 000	8 500	10 000	10 600	9 000	7 100	6 700	9 500	8 500	7 500	7 500	7 100	7 500	8 500	9 500	5 600	2 650
	50 000	7 500	9 000	10 000	10 600	10 600	9 000	8 000	7 500	9 500	8 500	8 000	8 000	8 500	9 500	10 000	10 000	6 000	3 750
1 400 000	71 000	6 300	6 700	7 500	9 000	9 500	8 500	6 700	6 000	9 000	7 500	6 700	6 700	6 300	6 700	7 500	8 500	5 300	2 240
	50 000	7 100	8 000	9 500	10 000	9 500	8 500	7 100	6 700	9 000	7 500	7 100	7 100	8 000	8 500	9 000	9 500	5 300	3 350
1 800 000	71 000	6 000	6 000	6 700	8 000	9 000	7 500	6 000	5 300	8 500	7 100	6 300	5 600	5 300	6 000	7 100	8 000	5 000	1 900
	50 000	6 300	7 500	8 500	9 500	9 000	8 000	6 700	6 300	8 500	7 500	6 700	6 700	7 500	7 500	8 500	9 000	5 000	3 000
2 240 000	50 000	6 000	7 100	7 500	8 500	8 500	7 500	6 000	5 600	8 000	6 700	6 300	6 300	6 300	6 700	7 500	8 500	4 750	2 650
	35 500	6 300	7 100	8 000	8 500	8 500	7 500	6 300	6 000	7 500	7 100	6 700	6 300	7 100	7 500	8 500	8 500	4 750	3 150
2 800 000	50 000	5 300	6 300	7 100	7 500	8 000	6 700	5 600	5 000	7 100	6 300	5 600	5 600	5 600	6 000	6 700	7 500	4 250	2 240
	35 500	6 000	6 700	7 500	8 000	8 000	6 700	6 000	5 600	7 100	6 300	6 000	6 000	6 300	7 100	7 500	7 500	4 500	3 000
3 550 000	50 000	5 000	5 600	6 300	7 100	7 500	6 300	5 000	4 750	6 700	6 000	5 300	5 300	5 000	5 300	6 300	6 700	4 000	1 900
	35 500	5 300	6 300	7 100	7 500	7 500	6 300	5 600	5 000	6 700	6 000	5 600	5 600	6 000	6 300	7 100	7 100	4 000	2 650
4 500 000	50 000	4 500	5 000	5 600	6 300	7 100	6 000	4 750	4 250	6 300	5 300	4 750	4 750	4 500	4 750	5 600	6 300	3 750	1 600
	35 500	5 000	5 600	6 700	7 100	7 100	6 000	5 000	4 750	6 300	5 600	5 300	5 300	5 600	6 000	6 300	6 700	3 750	2 360
5 600 000	50 000	4 000	4 250	4 750	5 600	6 300	5 300	4 250	3 750	6 000	5 000	4 500	4 000	3 750	4 250	5 000	5 600	3 350	1 320
	35 500	4 500	5 300	6 000	6 700	6 300	5 600	4 750	4 250	6 000	5 300	4 750	4 750	5 000	5 300	6 000	6 300	3 550	2 000
max		**12 500**																**8 000**	**4 000**

Values valid for metric «Solid low speed shaft»[4)] (see ch.17 (2)).

Size **225**

280 000	140 000	15 000	16 000	16 000	16 000	16 000	16 000	16 000	14 000	16 000	16 000	16 000	16 000	16 000	16 000	16 000	16 000	10 000	5 000
	100 000	16 000	16 000	16 000	16 000	16 000	16 000	16 000	16 000	16 000	16 000	16 000	16 000	16 000	16 000	16 000	16 000	10 000	5 000
355 000	140 000	14 000	16 000	16 000	16 000	16 000	16 000	14 000	12 500	16 000	16 000	15 000	15 000	15 000	16 000	16 000	16 000	10 000	5 000
	100 000	15 000	16 000	16 000	16 000	16 000	16 000	15 000	14 000	16 000	16 000	16 000	16 000	16 000	16 000	16 000	16 000	10 000	5 000
450 000	140 000	12 500	15 000	16 000	16 000	16 000	16 000	16 000	13 200	11 800	16 000	15 000	13 200	13 200	13 200	14 000	16 000	9 500	4 500
	100 000	14 000	16 000	16 000	16 000	16 000	16 000	14 000	13 200	16 000	16 000	14 000	14 000	16 000	16 000	16 000	16 000	10 000	5 000
560 000	140 000	11 800	12 500	14 000	16 000	16 000	15 000	11 800	10 600	16 000	14 000	12 500	11 800	11 200	12 500	14 000	16 000	9 000	3 750
	100 000	12 500	15 000	16 000	16 000	16 000	15 000	13 200	11 800	16 000	14 000	13 200	13 200	14 000	16 000	16 000	16 000	9 500	5 000
710 000	140 000	10 600	11 200	12 500	15 000	16 000	14 000	10 600	9 500	15 000	12 500	11 200	10 000	9 500	10 600	13 200	14 000	8 500	3 000
	100 000	11 800	14 000	16 000	16 000	16 000	14 000	11 800	11 200	15 000	13 200	12 500	12 500	13 200	14 000	15 000	16 000	8 500	4 750
	71 000	12 500	14 000	16 000	16 000	16 000	14 000	12 500	11 800	15 000	13 200	12 500	12 500	14 000	15 000	16 000	16 000	9 000	5 000
900 000	140 000	9 500	9 500	11 200	13 200	15 000	12 500	10 000	9 000	14 000	11 800	10 000	8 500	8 500	9 500	11 200	13 200	8 000	2 500
	100 000	10 600	12 500	14 000	16 000	16 000	13 200	11 200	10 000	14 000	12 500	11 200	11 200	11 800	12 500	14 000	16 000	8 000	4 250
	71 000	11 800	13 200	15 000	16 000	15 000	13 200	11 800	11 200	14 000	12 500	11 800	11 800	12 500	14 000	15 000	15 000	8 500	5 000
1 120 000	100 000	10 000	11 800	12 500	14 000	15 000	12 500	10 000	9 000	13 200	11 200	10 600	10 600	10 600	11 200	12 500	14 000	7 500	3 550
	71 000	10 600	12 500	14 000	15 000	14 000	12 500	11 200	10 000	13 200	11 800	11 200	11 200	11 800	13 200	14 000	14 000	7 500	5 000
1 400 000	100 000	9 000	10 000	11 200	12 500	14 000	11 200	9 000	8 500	12 500	10 600	9 500	9 500	9 000	10 000	11 200	12 500	7 100	3 150
	71 000	10 000	11 200	13 200	14 000	13 200	11 800	10 000	9 500	12 500	11 200	10 000	10 000	11 200	11 800	13 200	13 200	7 500	4 500
1 800 000	100 000	8 500	9 000	10 000	11 800	12 500	10 600	8 500	7 500	11 800	10 000	9 000	8 500	8 000	9 000	10 000	11 200	6 300	2 650
	71 000	9 000	10 600	12 500	13 200	12 500	11 200	9 500	8 500	11 800	10 000	9 500	9 500	10 000	11 200	11 800	12 500	6 700	3 750
2 240 000	71 000	8 500	10 000	11 200	12 500	11 800	10 000	8 500	8 000	10 600	9 500	8 500	8 500	9 500	10 000	11 200	11 800	6 300	3 350
	50 000	9 000	10 000	11 200	11 800	11 800	10 000	9 000	8 500	10 600	9 500	9 000	9 000	9 500	10 600	11 200	11 200	6 300	4 500
2 800 000	71 000	7 500	9 000	10 000	11 200	11 200	9 500	8 000	7 100	10 000	9 000	8 000	8 000	8 500	9 000	10 000	11 200	5 600	3 000
	50 000	8 500	9 500	10 600	11 200	10 600	9 500	8 500	8 000	10 000	9 000	8 500	8 500	9 000	10 000	10 600	10 600	6 000	3 750
3 550 000	71 000	7 100	8 500	9 000	10 000	10 600	9 000	7 100	6 300	9 500	8 000	7 500	7 500	7 500	8 000	9 000	10 000	5 300	2 500
	50 000	7 500	8 500	10 000	10 600	10 000	9 000	7 500	7 100	9 500	8 500	8 000	8 000	8 500	9 500	10 000	10 000	5 300	3 550
4 500 000	71 000	6 300	7 500	8 000	9 500	10 000	8 500	6 700	6 000	9 000	7 500	6 700	6 700	6 300	7 100	8 000	9 000	5 000	2 240
	50 000	7 100	8 000	9 500	10 000	9 500	8 500	7 100	6 700	9 000	8 000	7 100	7 100	8 000	8 500	9 500	9 500	5 000	3 150
5 600 000	71 000	6 000	6 300	7 100	8 500	9 000	7 500	6 000	5 300	8 500	7 100	6 300	6 000	5 600	6 300	7 100	8 000	4 500	1 800
	50 000	6 300	7 500	9 000	9 500	9 000	7 500	6 700	6 000	8 000	7 100	6 700	6 700	7 100	8 000	8 500	9 000	4 750	2 800
max		**16 000** (**9 000** for «short side»)																**10 000**	**5 000**

1) An axial load of up to 0.2 times the value in the table is permissible, simultaneously with the radial load. If exceeded consult us.
2) For radial loads acting simultaneously on both sides consult us.
3) An unfavourable direction of load can limit F_{r2} to 0.9 · F_{r2max}.
4) With hollow low speed shaft F_{r2} and F_{a2} permissible values are 0.4 times the one stated in the table.

16.2 - Axial loads F_{a2} [lb] or radial loads F_{r2} [lb] on low speed shaft end

Radial load applied on **groove side •**

Size **200**

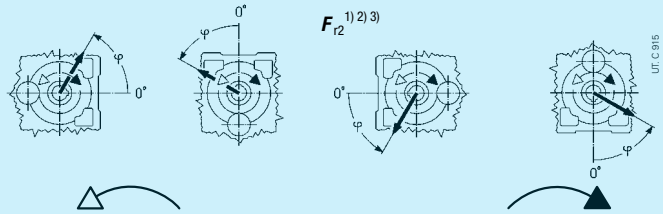

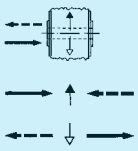

$n_2 \cdot L_h$	T_2	F_{r2} [1) 2) 3)]																F_{a2} [1)]	
rpm · h	lb in	0°	45°	90°	135°	180°	225°	270°	315°	0°	45°	90°	135°	180°	225°	270°	315°		
280 000	100 000	8 500	12 500	12 500	12 500	12 500	11 200	7 500	7 100	12 500	9 000	8 500	9 500	12 500	12 500	12 500	12 500	8 000	4 000
	71 000	10 600	12 500	12 500	12 500	12 500	11 800	9 500	9 000	12 500	10 600	10 000	10 600	12 500	12 500	12 500	12 500	8 000	4 000
355 000	100 000	7 500	11 800	12 500	12 500	12 500	10 000	6 700	6 300	11 200	8 500	7 500	8 500	11 800	12 500	12 500	12 500	8 000	3 750
	71 000	9 500	12 500	12 500	12 500	12 500	11 200	8 500	8 000	11 800	9 500	9 000	10 000	12 500	12 500	12 500	12 500	8 000	4 000
450 000	100 000	6 700	11 200	12 500	12 500	12 500	9 000	6 000	5 300	10 600	7 500	6 700	7 500	10 000	12 500	12 500	12 500	7 500	3 150
	71 000	8 500	11 800	12 500	12 500	12 500	10 000	8 000	7 100	11 200	9 000	8 000	9 000	11 200	12 500	12 500	12 500	7 500	4 000
560 000	100 000	6 000	10 000	12 500	12 500	12 500	8 000	5 000	4 500	9 500	6 700	5 600	6 700	9 000	11 800	12 500	12 500	7 100	2 650
	71 000	7 500	10 600	12 500	12 500	12 500	9 500	7 100	6 300	10 000	8 000	7 100	8 000	10 600	12 500	12 500	12 500	7 100	4 000
710 000	100 000	5 000	9 000	12 500	12 500	12 500	7 100	4 250	3 750	8 500	5 600	5 000	6 000	7 500	10 600	12 500	12 500	6 300	2 120
	71 000	6 700	10 000	12 500	12 500	12 500	8 500	6 300	5 600	9 500	7 100	6 300	7 500	9 500	12 500	12 500	12 500	6 700	3 550
	50 000	8 000	10 600	12 500	12 500	11 800	9 500	7 500	7 100	10 000	8 500	7 500	8 500	10 000	12 500	12 500	11 800	6 700	4 000
900 000	100 000	4 250	7 500	11 200	12 500	11 800	6 000	3 550	3 150	8 000	5 000	4 250	5 300	6 300	9 500	11 800	11 200	6 000	1 700
	71 000	6 300	9 500	12 500	12 500	11 800	8 000	5 600	5 000	9 000	6 700	6 000	6 700	9 000	11 200	12 500	11 800	6 300	3 150
	50 000	7 500	9 500	12 500	12 500	11 200	8 500	6 700	6 300	9 000	7 500	7 100	7 500	9 500	11 200	12 500	11 200	6 300	4 000
1 120 000	71 000	5 600	8 500	11 800	12 500	11 200	7 100	4 750	4 500	8 000	6 000	5 300	6 000	8 500	10 000	11 800	11 200	5 600	2 650
	50 000	6 700	9 000	11 800	12 500	10 600	8 000	6 300	6 000	8 500	7 100	6 300	7 100	9 000	10 600	11 800	10 600	6 000	3 750
1 400 000	71 000	4 750	8 000	10 600	11 800	10 000	6 300	4 000	3 750	7 500	5 300	4 500	5 300	7 100	9 500	10 600	10 600	5 300	2 240
	50 000	6 000	8 500	10 600	11 800	10 000	7 100	5 600	5 000	8 000	6 300	5 600	6 300	8 000	10 000	11 200	10 000	5 300	3 350
1 800 000	71 000	4 000	7 100	9 500	11 200	9 500	5 600	3 550	3 150	6 700	4 750	4 000	4 750	6 300	8 500	10 000	9 500	5 000	1 900
	50 000	5 600	7 500	10 000	11 200	9 500	6 700	5 000	4 500	7 500	5 600	5 300	6 000	7 500	9 500	10 600	9 500	5 000	3 000
2 240 000	50 000	5 000	7 100	9 500	10 600	9 000	6 000	4 500	4 000	6 700	5 300	4 750	5 300	7 100	8 500	9 500	9 000	4 750	2 650
	35 500	5 600	7 500	9 000	9 500	8 500	6 700	5 300	5 000	7 100	6 000	5 300	6 000	7 100	8 500	9 500	8 500	4 750	3 150
2 800 000	50 000	4 500	6 700	9 000	10 000	8 500	5 600	3 750	3 550	6 300	4 750	4 250	4 750	6 300	8 000	9 000	8 500	4 250	2 240
	35 500	5 300	6 700	8 500	9 000	8 000	6 000	4 750	4 500	6 300	5 300	5 000	5 300	6 700	8 000	9 000	8 000	4 500	3 000
3 550 000	50 000	3 750	6 000	8 500	9 000	8 000	5 000	3 350	3 150	5 600	4 250	3 550	4 250	6 000	7 100	8 500	8 000	4 000	1 900
	35 500	4 750	6 300	8 500	9 000	7 500	5 600	4 250	4 000	6 000	4 750	4 500	5 000	6 300	7 500	8 500	7 500	4 000	2 650
4 500 000	50 000	3 350	5 600	7 500	8 500	7 100	4 500	3 000	2 650	5 300	3 750	3 350	3 750	5 300	6 700	7 500	7 500	3 750	1 600
	35 500	4 250	6 000	8 000	8 500	7 100	5 000	3 750	3 550	5 600	4 500	4 000	4 500	5 600	7 100	8 000	7 100	3 750	2 360
5 600 000	50 000	3 000	5 000	6 700	8 000	6 700	4 000	2 500	2 240	4 750	3 350	2 800	3 350	4 500	6 000	7 100	6 700	3 350	1 320
	35 500	3 750	5 300	7 500	8 000	6 700	4 750	3 350	3 150	5 300	4 000	3 550	4 000	5 300	6 700	7 500	6 700	3 550	2 000
max		**12 500**																**8 000**	**4 000**

Values valid for metric «Solid low speed shaft»[4)] (see ch.17 (2)).

Size **225**

280 000	140 000	12 500	16 000	16 000	16 000	16 000	16 000	11 800	10 600	16 000	13 200	12 500	14 000	16 000	16 000	16 000	16 000	10 000	5 000
	100 000	15 000	16 000	16 000	16 000	16 000	16 000	14 000	13 200	16 000	15 000	14 000	15 000	16 000	16 000	16 000	16 000	10 000	5 000
355 000	140 000	11 200	16 000	16 000	16 000	16 000	14 000	10 000	9 500	16 000	12 500	11 200	12 500	16 000	16 000	16 000	16 000	10 000	5 000
	100 000	13 200	16 000	16 000	16 000	16 000	16 000	12 500	11 800	16 000	14 000	12 500	14 000	16 000	16 000	16 000	16 000	10 000	5 000
450 000	140 000	10 000	16 000	16 000	16 000	16 000	13 200	9 000	8 500	15 000	11 200	10 000	11 200	15 000	16 000	16 000	16 000	9 500	4 500
	100 000	12 500	16 000	16 000	16 000	16 000	15 000	11 200	10 600	16 000	12 500	11 800	12 500	16 000	16 000	16 000	16 000	10 000	5 000
560 000	140 000	9 000	14 000	16 000	16 000	16 000	11 800	8 000	7 100	14 000	10 000	9 000	10 000	13 200	16 000	16 000	16 000	9 000	3 750
	100 000	11 200	15 000	16 000	16 000	16 000	13 200	10 000	9 500	15 000	11 800	10 600	11 800	15 000	16 000	16 000	16 000	9 500	5 000
710 000	140 000	8 000	12 500	16 000	16 000	16 000	10 600	6 700	6 000	12 500	9 000	7 500	9 000	11 200	15 000	16 000	16 000	8 500	3 000
	100 000	10 000	14 000	16 000	16 000	16 000	12 500	9 000	8 500	13 200	10 600	9 500	10 600	14 000	16 000	16 000	16 000	8 500	4 750
	71 000	11 200	14 000	16 000	16 000	16 000	13 200	10 600	10 000	14 000	11 800	11 200	11 800	14 000	16 000	16 000	16 000	9 000	5 000
900 000	140 000	6 700	11 200	16 000	16 000	16 000	9 500	6 000	5 300	11 800	8 000	6 700	8 000	10 000	13 200	16 000	16 000	8 000	2 500
	100 000	9 000	13 200	16 000	16 000	16 000	11 200	8 500	7 500	12 500	9 500	9 000	9 500	12 500	16 000	16 000	16 000	8 000	4 250
	71 000	10 600	13 200	16 000	16 000	16 000	12 500	10 000	9 500	12 500	10 600	10 000	11 200	13 200	16 000	16 000	16 000	8 500	5 000
1 120 000	100 000	8 000	11 800	16 000	16 000	15 000	10 000	7 500	6 700	11 800	9 000	8 000	9 000	11 800	14 000	16 000	16 000	7 500	3 550
	71 000	9 500	12 500	16 000	16 000	15 000	11 200	9 000	8 500	11 800	10 000	9 000	10 000	12 500	15 000	16 000	15 000	7 500	5 000
1 400 000	100 000	7 100	11 200	15 000	16 000	14 000	9 000	6 300	5 600	10 600	8 000	7 100	8 000	10 600	12 500	15 000	15 000	7 100	3 150
	71 000	8 500	11 800	15 000	16 000	14 000	10 600	8 000	7 500	11 200	9 000	8 500	9 000	11 200	14 000	15 000	14 000	7 500	4 500
1 800 000	100 000	6 300	10 000	13 200	16 000	13 200	8 500	5 600	5 000	10 000	7 100	6 300	7 100	9 000	11 800	14 000	13 200	6 300	2 650
	71 000	8 000	10 600	14 000	15 000	12 500	9 500	7 100	6 700	10 000	8 500	7 500	8 500	10 600	13 200	14 000	13 200	6 700	3 750
2 240 000	71 000	7 100	10 000	13 200	14 000	12 500	9 000	6 700	6 000	9 500	7 500	7 100	7 500	9 500	12 500	13 200	12 500	6 300	3 350
	50 000	8 500	10 000	12 500	13 200	11 800	9 500	7 500	7 500	10 000	8 500	8 000	8 500	10 000	11 800	12 500	11 800	6 300	4 500
2 800 000	71 000	6 300	9 000	12 500	14 000	11 200	8 000	6 000	5 300	9 000	6 700	6 300	7 100	9 000	11 200	12 500	11 800	5 600	3 000
	50 000	7 500	9 500	11 800	12 500	11 200	8 500	7 100	6 700	9 000	7 500	7 100	8 000	9 500	11 200	11 800	11 200	6 000	3 750
3 550 000	71 000	5 600	8 500	11 800	12 500	10 600	7 100	5 000	4 750	8 500	6 300	5 600	6 300	8 500	10 000	11 200	11 200	5 300	2 500
	50 000	6 700	9 000	11 200	11 800	10 600	8 000	6 300	6 000	8 500	7 100	6 300	7 100	8 500	10 600	11 200	10 600	5 300	3 550
4 500 000	71 000	5 000	8 000	10 600	11 800	10 000	6 700	4 500	4 000	7 500	5 600	5 000	5 600	7 500	9 500	10 600	10 600	5 000	2 240
	50 000	6 300	8 500	10 600	11 200	10 000	7 500	5 600	5 300	8 000	6 300	6 000	6 300	8 000	10 000	10 600	10 000	5 000	3 150
5 600 000	71 000	4 500	7 100	9 500	11 200	9 500	6 000	4 000	3 550	7 100	5 000	4 250	5 000	6 300	8 500	9 500	9 500	4 500	1 800
	50 000	5 600	7 500	10 000	10 600	9 000	6 700	5 300	4 750	7 500	6 000	5 300	6 000	7 500	9 500	10 000	9 500	4 750	2 800
max		**16 000** (**9 000** for «short side»)																**10 000**	**5 000**

1) An axial load of up to 0.2 times the value in the table is permissible, simultaneously with the radial load. If exceeded consult us.
2) For radial loads acting simultaneously on both sides consult us.
3) An unfavourable direction of load can limit F_{r2} to $0.9 \cdot F_{r2max}$.
4) With hollow low speed shaft F_{r2} and F_{a2} permissible is 0.4 times the one stated in the table.

16.2 - Axial loads F_{a2} [lb] or radial loads F_{r2} [lb] on low speed shaft end

Radial load applied on **opposite side to groove**

Size **250**

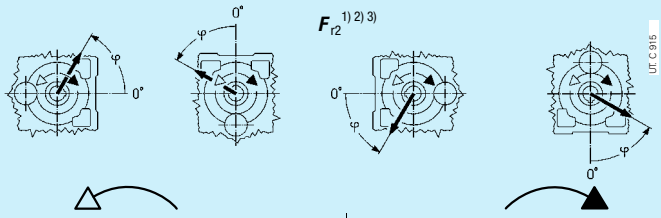

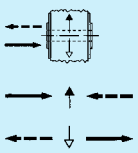

$n_2 \cdot L_h$	T_2	F_{r2} [1) 2) 3)]																F_{a2} [1)]	
rpm · h	lb in	0°	45°	90°	135°	180°	225°	270°	315°	0°	45°	90°	135°	180°	225°	270°	315°		
280 000	200 000	20 000	20 000	20 000	20 000	20 000	20 000	20 000	20 000	19 000	18 000	19 000	20 000	20 000	20 000	20 000	20 000	6 300	12 500
	140 000	20 000	20 000	20 000	20 000	20 000	20 000	20 000	20 000	20 000	19 000	20 000	20 000	20 000	20 000	20 000	20 000	6 300	12 500
355 000	200 000	20 000	20 000	20 000	20 000	19 000	18 000	18 000	20 000	17 000	16 000	18 000	20 000	20 000	20 000	20 000	20 000	6 300	12 500
	140 000	20 000	20 000	20 000	20 000	20 000	19 000	19 000	20 000	19 000	18 000	19 000	20 000	20 000	20 000	20 000	20 000	6 300	12 500
450 000	200 000	20 000	20 000	20 000	18 000	17 000	17 000	17 000	19 000	16 000	15 000	16 000	20 000	20 000	20 000	20 000	19 000	6 300	12 500
	140 000	20 000	20 000	20 000	20 000	19 000	18 000	18 000	19 000	17 000	16 000	18 000	20 000	20 000	20 000	20 000	20 000	6 300	12 500
560 000	200 000	20 000	20 000	18 000	16 000	14 000	15 000	15 000	17 000	14 000	13 200	15 000	19 000	20 000	20 000	18 000	16 000	5 600	11 800
	140 000	20 000	20 000	20 000	19 000	18 000	16 000	16 000	18 000	16 000	15 000	16 000	19 000	20 000	20 000	20 000	18 000	6 300	12 500
710 000	200 000	19 000	18 000	16 000	13 200	12 500	13 200	14 000	16 000	13 200	11 800	13 200	17 000	20 000	18 000	16 000	14 000	4 750	11 200
	140 000	19 000	20 000	19 000	17 000	16 000	15 000	15 000	17 000	14 000	14 000	15 000	18 000	20 000	20 000	19 000	17 000	6 300	11 800
	100 000	18 000	19 000	19 000	18 000	17 000	16 000	16 000	17 000	15 000	15 000	16 000	18 000	20 000	20 000	19 000	17 000	6 300	11 800
900 000	200 000	18 000	16 000	14 000	11 800	10 600	11 200	12 500	15 000	11 800	11 200	12 500	16 000	18 000	17 000	14 000	11 200	3 750	10 600
	140 000	17 000	19 000	17 000	16 000	15 000	14 000	14 000	15 000	13 200	12 500	13 200	16 000	19 000	19 000	18 000	16 000	6 000	10 600
	100 000	17 000	18 000	18 000	17 000	16 000	15 000	15 000	16 000	14 000	13 200	14 000	17 000	19 000	19 000	18 000	16 000	6 300	10 600
1 120 000	140 000	16 000	17 000	16 000	14 000	13 200	12 500	12 500	14 000	11 800	11 800	12 500	15 000	18 000	18 000	16 000	14 000	5 300	10 000
	100 000	16 000	17 000	17 000	16 000	14 000	13 200	13 200	14 000	13 200	12 500	13 200	15 000	17 000	18 000	17 000	15 000	6 300	10 000
1 400 000	140 000	15 000	16 000	14 000	12 500	11 800	11 800	11 800	13 200	11 200	10 600	11 800	14 000	17 000	16 000	14 000	13 200	4 750	9 000
	100 000	15 000	16 000	16 000	15 000	13 200	12 500	12 500	13 200	11 800	11 800	12 500	14 000	16 000	17 000	16 000	13 200	6 000	9 500
1 800 000	140 000	14 000	14 000	12 500	11 200	10 600	10 600	11 200	11 800	10 000	9 500	10 600	13 200	16 000	14 000	12 500	11 800	4 000	8 500
	100 000	14 000	15 000	15 000	13 200	12 500	11 800	11 800	12 500	11 200	10 600	11 200	13 200	15 000	16 000	15 000	12 500	5 600	9 000
2 240 000	100 000	13 200	14 000	13 200	11 800	11 800	10 600	10 600	11 800	10 600	10 000	10 600	12 500	14 000	15 000	14 000	11 800	5 000	8 000
	71 000	13 200	13 200	13 200	12 500	11 800	11 200	11 200	11 800	11 200	10 600	11 200	12 500	14 000	14 000	13 200	11 800	6 000	8 500
2 800 000	100 000	11 800	13 200	11 800	11 200	10 600	10 000	10 000	10 600	9 500	9 000	9 500	11 800	13 200	13 200	12 500	11 200	4 250	7 500
	71 000	11 800	12 500	12 500	11 800	11 200	10 600	10 600	11 200	10 000	9 500	10 600	11 800	13 200	13 200	12 500	11 200	5 300	8 000
3 550 000	100 000	11 200	11 800	11 200	10 000	9 500	9 000	9 000	10 000	8 500	8 000	9 000	10 600	12 500	12 500	11 200	10 000	3 750	7 100
	71 000	11 200	11 800	11 800	11 200	10 000	9 500	9 500	10 600	9 500	9 000	9 500	10 600	11 800	12 500	11 800	10 600	5 000	7 100
4 500 000	100 000	10 600	11 200	10 000	9 000	8 500	8 500	8 500	9 500	8 000	7 500	8 000	10 000	11 800	11 200	10 000	9 500	3 350	6 700
	71 000	10 600	11 200	11 200	10 600	9 500	9 000	9 000	9 500	8 500	8 500	9 000	10 000	11 800	11 800	11 200	10 000	4 500	6 700
5 600 000	100 000	10 000	10 000	9 000	8 000	7 100	7 500	7 500	8 500	7 100	6 700	7 500	9 500	11 200	10 000	9 000	8 000	2 800	6 000
	71 000	10 000	10 600	10 600	9 500	9 000	8 000	8 000	9 000	8 000	7 500	8 000	9 500	10 600	11 200	10 600	9 000	4 000	6 300
max		**20 000**																**6 300**	**12 500**

Values valid for metric «Solid low speed shaft»[4)] (see ch.17 (2)).

Size **280**

280 000	280 000	25 000	25 000	25 000	25 000	25 000	25 000	25 000	25 000	25 000	23 600	25 000	25 000	25 000	25 000	25 000	25 000	8 000	16 000
	200 000	25 000	25 000	25 000	25 000	25 000	25 000	25 000	25 000	25 000	25 000	25 000	25 000	25 000	25 000	25 000	25 000	8 000	16 000
355 000	280 000	25 000	25 000	25 000	25 000	25 000	23 600	23 600	25 000	22 400	21 200	23 600	25 000	25 000	25 000	25 000	25 000	8 000	16 000
	200 000	25 000	25 000	25 000	25 000	25 000	25 000	25 000	25 000	25 000	23 600	25 000	25 000	25 000	25 000	25 000	25 000	8 000	16 000
450 000	280 000	25 000	25 000	25 000	25 000	23 600	22 400	22 400	23 600	21 200	20 000	21 200	25 000	25 000	25 000	25 000	25 000	8 000	16 000
	200 000	25 000	25 000	25 000	25 000	25 000	23 600	23 600	25 000	22 400	21 200	23 600	25 000	25 000	25 000	25 000	25 000	8 000	16 000
560 000	280 000	25 000	25 000	25 000	22 400	21 200	20 000	20 000	22 400	19 000	18 000	19 000	23 600	25 000	25 000	25 000	22 400	7 500	15 000
	200 000	25 000	25 000	25 000	25 000	23 600	21 200	21 200	23 600	21 200	20 000	21 200	25 000	25 000	25 000	25 000	23 600	8 000	15 000
710 000	280 000	25 000	25 000	22 400	20 000	18 000	19 000	18 000	20 000	18 000	16 000	18 000	22 400	25 000	25 000	22 400	20 000	6 300	13 200
	200 000	23 600	25 000	25 000	23 600	22 400	20 000	20 000	21 200	19 000	18 000	19 000	22 400	25 000	25 000	25 000	22 400	8 000	14 000
	140 000	23 600	25 000	25 000	25 000	22 400	21 200	21 200	22 400	20 000	20 000	21 200	23 600	25 000	25 000	25 000	22 400	8 000	14 000
900 000	280 000	22 400	22 400	20 000	17 000	16 000	17 000	17 000	19 000	16 000	14 000	16 000	21 200	25 000	23 600	20 000	18 000	5 300	12 500
	200 000	22 400	25 000	23 600	22 400	20 000	18 000	18 000	20 000	18 000	17 000	18 000	21 200	25 000	25 000	25 000	21 200	8 000	13 200
	140 000	22 400	23 600	23 600	22 400	21 200	19 000	19 000	20 000	19 000	18 000	19 000	21 200	25 000	25 000	23 600	21 200	8 000	13 200
1 120 000	200 000	21 200	23 600	21 200	20 000	19 000	17 000	17 000	18 000	16 000	15 000	17 000	20 000	23 600	25 000	22 400	19 000	7 100	12 500
	140 000	21 200	22 400	22 400	21 200	19 000	18 000	18 000	19 000	18 000	17 000	18 000	20 000	22 400	23 600	22 400	20 000	8 000	12 500
1 400 000	200 000	20 000	21 200	19 000	18 000	17 000	16 000	15 000	17 000	15 000	14 000	15 000	18 000	22 400	22 400	20 000	18 000	6 000	11 200
	140 000	20 000	22 400	20 000	19 000	18 000	16 000	16 000	17 000	16 000	15 000	16 000	19 000	21 200	22 400	21 200	18 000	8 000	11 800
1 800 000	200 000	19 000	19 000	18 000	16 000	14 000	14 000	14 000	16 000	13 200	12 500	14 000	17 000	21 200	20 000	18 000	16 000	5 300	10 600
	140 000	18 000	20 000	20 000	19 000	17 000	15 000	15 000	17 000	15 000	14 000	15 000	18 000	20 000	21 200	20 000	17 000	7 100	10 600
2 240 000	140 000	17 000	19 000	19 000	17 000	16 000	14 000	14 000	15 000	14 000	12 500	14 000	17 000	19 000	20 000	19 000	16 000	6 300	10 000
	100 000	17 000	18 000	18 000	17 000	16 000	15 000	15 000	16 000	15 000	14 000	15 000	17 000	18 000	19 000	18 000	16 000	7 500	10 000
2 800 000	140 000	16 000	18 000	17 000	15 000	14 000	12 500	12 500	14 000	12 500	11 800	12 500	15 000	18 000	19 000	17 000	15 000	5 600	9 500
	100 000	16 000	17 000	17 000	16 000	15 000	13 200	13 200	14 000	13 200	12 500	13 200	15 000	17 000	18 000	17 000	15 000	7 100	9 500
3 550 000	140 000	15 000	17 000	15 000	14 000	13 200	11 800	11 800	12 500	11 200	10 600	11 800	14 000	17 000	17 000	16 000	14 000	5 000	8 500
	100 000	15 000	16 000	16 000	15 000	13 200	12 500	12 500	13 200	12 500	11 800	12 500	14 000	16 000	17 000	16 000	14 000	6 300	9 000
4 500 000	140 000	14 000	15 000	14 000	12 500	11 800	11 200	11 200	11 800	10 600	10 000	10 600	13 200	16 000	16 000	14 000	12 500	4 250	8 000
	100 000	14 000	15 000	15 000	14 000	12 500	11 800	11 800	12 500	11 200	11 200	11 800	13 200	15 000	16 000	15 000	13 200	5 600	8 500
5 600 000	140 000	13 200	14 000	12 500	11 200	10 600	10 000	10 000	11 200	9 500	9 000	10 000	11 800	15 000	14 000	12 500	11 800	3 750	7 500
	100 000	12 500	14 000	14 000	13 200	11 800	10 600	10 600	11 800	10 600	10 000	10 600	12 500	14 000	15 000	14 000	12 500	5 000	7 500
max		**25 000** (**14 000** for «short side»)																**8 000**	**16 000**

1) An axial load of up to 0.2 times the value in the table is permissible, simultaneously with the radial load. If exceeded consult us.
2) For radial loads acting simultaneously on both sides consult us.
3) An unfavourable direction of load can limit F_{r2} to .,9 · F_{r2max}.
4) With hollow low speed shaft F_{a2} and F_{r2} permissible is 0.4 times the one stated in the table.

16.2 - Axial loads F_{a2} [lb] or radial loads F_{r2} [lb] on low speed shaft end

Radial load applied on **groove side •**

Size **250**

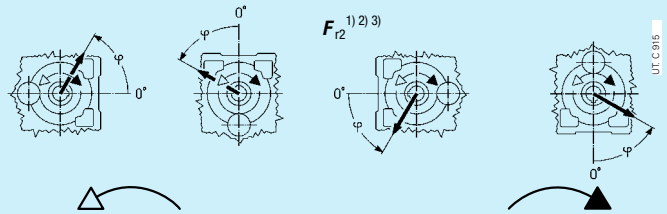

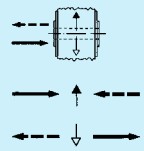

$n_2 \cdot L_h$	T_2	F_{r2} [1) 2) 3)]																F_{a2} [1)]	
rpm · h	lb in	0°	45°	90°	135°	180°	225°	270°	315°	0°	45°	90°	135°	180°	225°	270°	315°		
280 000	200 000	20 000	20 000	20 000	20 000	20 000	17 000	15 000	17 000	16 000	13 200	14 000	19 000	20 000	20 000	20 000	20 000	6 300	12 500
	140 000	20 000	20 000	20 000	20 000	20 000	19 000	17 000	19 000	18 000	16 000	17 000	20 000	20 000	20 000	20 000	20 000	6 300	12 500
355 000	200 000	20 000	20 000	20 000	20 000	20 000	15 000	13 200	15 000	14 000	11 200	12 500	17 000	20 000	20 000	20 000	20 000	6 300	12 500
	140 000	20 000	20 000	20 000	20 000	20 000	17 000	16 000	17 000	17 000	14 000	15 000	19 000	20 000	20 000	20 000	20 000	6 300	12 500
450 000	200 000	18 000	20 000	20 000	20 000	19 000	13 200	11 800	13 200	12 500	10 000	11 200	16 000	20 000	20 000	20 000	19 000	6 300	12 500
	140 000	19 000	20 000	20 000	20 000	20 000	16 000	14 000	16 000	15 000	13 200	14 000	18 000	20 000	20 000	20 000	20 000	6 300	12 500
560 000	200 000	17 000	20 000	20 000	20 000	17 000	11 800	10 600	11 800	11 200	8 500	9 500	14 000	20 000	20 000	20 000	18 000	5 600	11 800
	140 000	18 000	20 000	20 000	20 000	18 000	14 000	13 200	14 000	13 200	11 800	12 500	16 000	20 000	20 000	20 000	19 000	6 300	12 500
710 000	200 000	15 000	20 000	20 000	19 000	15 000	10 600	9 500	10 600	9 500	7 500	8 000	12 500	20 000	20 000	20 000	16 000	4 750	11 200
	140 000	16 000	20 000	20 000	20 000	17 000	13 200	11 800	12 500	12 500	10 600	11 200	15 000	20 000	20 000	20 000	17 000	6 300	11 800
	100 000	17 000	20 000	20 000	20 000	17 000	14 000	13 200	14 000	14 000	12 500	13 200	16 000	20 000	20 000	20 000	18 000	6 300	11 800
900 000	200 000	14 000	20 000	20 000	18 000	12 500	9 500	8 000	9 500	8 000	6 300	7 100	11 200	20 000	20 000	20 000	14 000	3 750	10 600
	140 000	15 000	20 000	20 000	20 000	16 000	11 800	10 600	11 800	11 200	9 500	10 000	13 200	20 000	20 000	20 000	16 000	6 000	10 600
	100 000	16 000	19 000	20 000	19 000	16 000	13 200	11 800	13 200	12 500	11 200	11 800	15 000	19 000	20 000	20 000	16 000	6 300	10 600
1 120 000	140 000	14 000	19 000	20 000	18 000	14 000	10 600	9 500	10 600	10 000	8 500	9 000	12 500	19 000	20 000	20 000	15 000	5 300	10 000
	100 000	15 000	18 000	20 000	18 000	15 000	11 800	11 200	11 800	11 800	10 600	11 200	13 200	18 000	20 000	19 000	15 000	6 300	10 000
1 400 000	140 000	12 500	18 000	19 000	17 000	13 200	9 500	8 500	9 500	9 000	7 100	8 000	11 200	17 000	20 000	19 000	13 200	4 750	9 000
	100 000	13 200	17 000	18 000	17 000	14 000	11 200	10 000	11 200	10 600	9 000	10 000	12 500	17 000	19 000	18 000	14 000	6 000	9 500
1 800 000	140 000	11 800	17 000	17 000	15 000	11 800	8 500	7 500	8 500	8 000	6 300	6 700	10 000	16 000	19 000	17 000	12 500	4 000	8 500
	100 000	12 500	16 000	17 000	16 000	12 500	10 600	9 000	10 000	9 500	8 500	9 000	11 800	16 000	18 000	17 000	13 200	5 600	9 000
2 240 000	100 000	11 800	15 000	17 000	15 000	11 800	9 500	8 500	9 000	9 000	7 500	8 000	10 600	15 000	18 000	16 000	11 800	5 000	8 000
	71 000	11 800	14 000	15 000	14 000	11 800	10 600	9 500	10 000	10 000	9 000	9 500	11 200	14 000	16 000	15 000	12 500	6 000	8 500
2 800 000	100 000	10 600	14 000	16 000	14 000	11 200	8 500	7 500	8 500	8 000	6 700	7 100	9 500	14 000	17 000	15 000	11 200	4 250	7 500
	71 000	11 200	13 200	14 000	13 200	11 200	9 500	8 500	9 500	9 000	8 500	8 500	10 600	13 200	15 000	14 000	11 800	5 300	8 000
3 550 000	100 000	10 000	13 200	14 000	12 500	10 000	7 500	6 700	7 500	7 100	6 000	6 300	9 000	13 200	16 000	14 000	10 600	3 750	7 100
	71 000	10 600	12 500	14 000	12 500	10 600	8 500	8 000	8 500	8 500	7 100	7 500	9 500	12 500	14 000	13 200	10 600	5 000	7 100
4 500 000	100 000	9 000	12 500	13 200	11 800	9 500	6 700	6 000	6 700	6 300	5 000	5 600	8 000	11 800	15 000	13 200	9 500	3 350	6 700
	71 000	9 500	11 800	13 200	11 800	10 000	8 000	7 100	8 000	7 500	6 700	7 100	9 000	11 800	13 200	12 500	10 000	4 500	6 700
5 600 000	100 000	8 500	11 800	11 800	10 600	8 500	6 000	5 300	6 000	5 600	4 500	4 750	7 100	11 200	14 000	11 800	9 000	2 800	6 000
	71 000	9 000	11 200	12 500	11 200	9 000	7 100	6 700	7 100	6 700	6 000	6 300	8 000	11 200	13 200	11 800	9 500	4 000	6 300
max		**20 000**																**6 300**	**12 500**

Values valid for metric «Solid low speed shaft»[4)] (see ch.17 (2)).

Size **280**

280 000	280 000	25 000	25 000	25 000	25 000	25 000	22 400	20 000	22 400	21 200	18 000	19 000	25 000	25 000	25 000	25 000	25 000	8 000	16 000
	200 000	25 000	25 000	25 000	25 000	25 000	25 000	23 600	25 000	25 000	21 200	22 400	25 000	25 000	25 000	25 000	25 000	8 000	16 000
355 000	280 000	25 000	25 000	25 000	25 000	25 000	20 000	18 000	20 000	19 000	16 000	17 000	23 600	25 000	25 000	25 000	25 000	8 000	16 000
	200 000	25 000	25 000	25 000	25 000	25 000	22 400	21 200	22 400	22 400	19 000	20 000	25 000	25 000	25 000	25 000	25 000	8 000	16 000
450 000	280 000	23 600	25 000	25 000	25 000	25 000	18 000	16 000	18 000	17 000	14 000	15 000	21 200	25 000	25 000	25 000	25 000	8 000	16 000
	200 000	25 000	25 000	25 000	25 000	25 000	21 200	19 000	20 000	20 000	18 000	19 000	23 600	25 000	25 000	25 000	25 000	8 000	16 000
560 000	280 000	22 400	25 000	25 000	25 000	23 600	17 000	14 000	16 000	15 000	11 800	12 500	19 000	25 000	25 000	25 000	23 600	7 500	15 000
	200 000	23 600	25 000	25 000	25 000	23 600	19 000	17 000	19 000	18 000	16 000	17 000	21 200	25 000	25 000	25 000	25 000	8 000	15 000
710 000	280 000	20 000	25 000	25 000	25 000	21 200	15 000	12 500	14 000	13 200	10 000	11 200	17 000	25 000	25 000	25 000	21 200	6 300	13 200
	200 000	21 200	25 000	25 000	25 000	22 400	18 000	16 000	17 000	17 000	14 000	15 000	20 000	25 000	25 000	25 000	23 600	8 000	14 000
	140 000	22 400	25 000	25 000	25 000	22 400	19 000	18 000	19 000	19 000	17 000	18 000	21 200	25 000	25 000	25 000	23 600	8 000	14 000
900 000	280 000	18 000	25 000	25 000	25 000	18 000	12 500	11 200	12 500	11 200	9 000	9 500	15 000	25 000	25 000	25 000	20 000	5 300	12 500
	200 000	20 000	25 000	25 000	25 000	21 200	16 000	14 000	15 000	15 000	12 500	13 200	18 000	25 000	25 000	25 000	21 200	8 000	13 200
	140 000	21 200	25 000	25 000	25 000	21 200	18 000	17 000	18 000	17 000	15 000	16 000	20 000	25 000	25 000	25 000	22 400	8 000	13 200
1 120 000	200 000	19 000	25 000	25 000	25 000	19 000	14 000	12 500	14 000	13 200	11 200	11 800	17 000	23 600	25 000	25 000	20 000	7 100	12 500
	140 000	19 000	23 600	25 000	23 600	20 000	17 000	15 000	16 000	16 000	14 000	15 000	18 000	23 600	25 000	25 000	20 000	8 000	12 500
1 400 000	200 000	17 000	23 600	25 000	22 400	18 000	12 500	11 200	12 500	11 800	9 500	10 600	15 000	22 400	25 000	25 000	18 000	6 000	11 200
	140 000	17 000	22 400	25 000	23 600	18 000	13 200	11 800	13 200	14 000	12 500	13 200	17 000	22 400	25 000	23 600	19 000	8 000	11 800
1 800 000	200 000	16 000	22 400	23 600	21 200	17 000	11 800	10 000	11 200	10 600	8 500	9 000	13 200	21 200	25 000	23 600	17 000	5 300	10 600
	140 000	17 000	21 200	23 600	21 200	17 000	13 200	12 500	13 200	12 500	11 200	11 800	15 000	21 200	25 000	22 400	18 000	7 100	10 600
2 240 000	140 000	15 000	20 000	22 400	20 000	16 000	12 500	11 200	11 800	11 800	10 000	10 600	14 000	19 000	23 600	21 200	17 000	6 300	10 000
	100 000	16 000	19 000	20 000	19 000	17 000	14 000	12 500	13 200	13 200	11 800	12 500	15 000	19 000	21 200	20 000	17 000	7 500	10 000
2 800 000	140 000	14 000	18 000	21 200	19 000	15 000	11 200	10 000	11 200	10 600	9 000	9 500	12 500	18 000	22 400	20 000	15 000	5 600	9 500
	100 000	15 000	18 000	19 000	18 000	15 000	12 500	11 200	12 500	12 500	10 600	11 200	14 000	18 000	20 000	19 000	15 000	7 100	9 500
3 550 000	140 000	13 200	18 000	19 000	18 000	13 200	10 000	9 000	10 000	9 500	8 000	8 500	11 800	17 000	21 200	19 000	14 000	5 000	8 500
	100 000	13 200	17 000	18 000	17 000	14 000	11 200	10 600	11 200	11 200	9 500	10 000	12 500	17 000	19 000	18 000	14 000	6 300	9 000
4 500 000	140 000	11 800	17 000	18 000	16 000	12 500	9 000	8 000	9 000	8 500	7 100	7 500	10 600	16 000	20 000	18 000	12 500	4 250	8 000
	100 000	12 500	16 000	17 000	16 000	13 200	10 600	9 500	10 600	10 000	9 000	9 500	11 800	16 000	18 000	17 000	13 200	5 600	8 500
5 600 000	140 000	11 200	16 000	17 000	15 000	11 800	8 500	7 100	8 000	7 500	6 000	6 700	9 500	15 000	19 000	17 000	11 800	3 750	7 500
	100 000	11 800	15 000	17 000	15 000	11 800	9 500	9 000	9 500	9 000	8 000	8 500	10 600	15 000	17 000	16 000	12 500	5 000	7 500
max		**25 000** (**14 000** for «short side»)																**8 000**	**16 000**

1) An axial load of up to 0.2 times the value in the table is permissible, simultaneously with the radial load. If exceeded consult us.
2) For radial loads acting simultaneously on both sides consult us.
3) An unfavourable direction of load can limit F_{r2} to $0.9 \cdot F_{r2max}$.
4) With hollow low speed shaft F_{r2} and F_{a2} permissible is 0.4 times the one stated in the table.

16.2 - Axial loads F_{a2} [lb] or radial loads F_{r2} [lb] on low speed shaft end

Radial load applied on **opposite side to groove**

Sizes **320, 321**

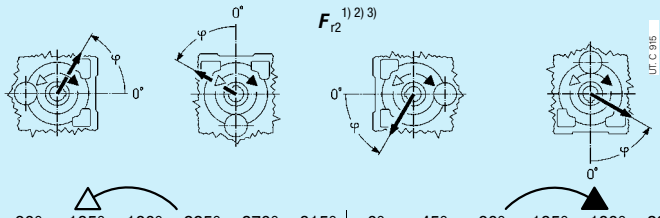

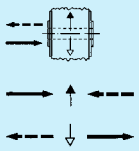

$n_2 \cdot L_h$	T_2	F_{r2} [1) 2) 3)]																F_{a2} [1)]	
rpm · h	lb in	0°	45°	90°	135°	180°	225°	270°	315°	0°	45°	90°	135°	180°	225°	270°	315°		
280 000	400 000	30 000	31 500	31 500	31 500	31 500	31 500	30 000	26 500	31 500	31 500	30 000	30 000	31 500	31 500	31 500	31 500	20 000	10 000
	280 000	31 500	31 500	31 500	31 500	31 500	31 500	31 500	30 000	31 500	31 500	31 500	31 500	31 500	31 500	31 500	31 500	20 000	10 000
355 000	400 000	26 500	31 500	31 500	31 500	31 500	31 500	26 500	25 000	31 500	30 000	28 000	28 000	30 000	30 000	31 500	31 500	19 000	10 000
	280 000	30 000	31 500	31 500	31 500	31 500	31 500	30 000	28 000	31 500	31 500	30 000	30 000	31 500	31 500	31 500	31 500	20 000	10 000
450 000	400 000	23 600	28 000	31 500	31 500	31 500	31 500	25 000	22 400	31 500	28 000	25 000	26 500	25 000	28 000	31 500	31 500	18 000	8 500
	280 000	26 500	31 500	31 500	31 500	31 500	31 500	26 500	25 000	31 500	30 000	28 000	28 000	30 000	31 500	31 500	31 500	19 000	10 000
560 000	400 000	22 400	25 000	26 500	31 500	31 500	28 000	22 400	20 000	31 500	26 500	23 600	23 600	22 400	23 600	28 000	31 500	17 000	7 100
	280 000	25 000	28 000	31 500	31 500	31 500	30 000	25 000	23 600	31 500	26 500	25 000	25 000	28 000	30 000	31 500	31 500	17 000	10 000
710 000	400 000	20 000	21 200	23 600	28 000	30 000	26 500	20 000	18 000	30 000	23 600	21 200	20 000	19 000	21 200	25 000	28 000	15 000	5 600
	280 000	22 400	26 500	30 000	31 500	31 500	26 500	22 400	21 200	28 000	25 000	23 600	23 600	25 000	26 500	30 000	31 500	16 000	9 500
	200 000	23 600	26 500	30 000	31 500	31 500	26 500	23 600	22 400	28 000	26 500	23 600	25 000	26 500	28 000	30 000	30 000	17 000	10 000
900 000	400 000	18 000	18 000	21 200	25 000	28 000	25 000	19 000	17 000	26 500	22 400	19 000	17 000	16 000	18 000	21 200	25 000	14 000	4 500
	280 000	20 000	25 000	28 000	30 000	30 000	25 000	21 200	19 000	26 500	23 600	21 200	21 200	23 600	23 600	26 500	30 000	15 000	8 500
	200 000	22 400	25 000	28 000	30 000	30 000	25 000	22 400	21 200	26 500	23 600	22 400	22 400	25 000	26 500	28 000	28 000	15 000	10 000
1 120 000	280 000	19 000	22 400	25 000	28 000	28 000	23 600	19 000	18 000	25 000	21 200	20 000	20 000	21 200	22 400	23 600	26 500	13 200	7 100
	200 000	20 000	23 600	26 500	28 000	26 500	23 600	20 000	19 000	25 000	22 400	21 200	21 200	22 400	25 000	26 500	26 500	14 000	9 500
1 400 000	280 000	17 000	20 000	21 200	25 000	26 500	21 200	18 000	16 000	23 600	20 000	18 000	18 000	18 000	19 000	21 200	23 600	12 500	6 000
	200 000	19 000	21 200	25 000	26 500	25 000	22 400	19 000	18 000	22 400	20 000	19 000	19 000	21 200	23 600	25 000	25 000	13 200	8 500
1 800 000	280 000	16 000	18 000	19 000	22 400	23 600	20 000	16 000	14 000	22 400	18 000	17 000	17 000	16 000	17 000	20 000	22 400	11 800	5 000
	200 000	17 000	20 000	23 600	25 000	23 600	20 000	18 000	16 000	21 200	19 000	18 000	18 000	19 000	21 200	22 400	23 600	11 800	7 500
2 240 000	200 000	16 000	19 000	21 200	23 600	22 400	19 000	16 000	15 000	20 000	18 000	17 000	17 000	18 000	19 000	21 200	22 400	11 200	6 700
	140 000	17 000	19 000	21 200	22 400	21 200	19 000	17 000	16 000	20 000	18 000	17 000	17 000	19 000	20 000	21 200	21 200	11 800	8 500
2 800 000	200 000	14 000	17 000	19 000	21 200	21 200	18 000	15 000	13 200	19 000	17 000	15 000	15 000	17 000	17 000	19 000	21 200	10 600	5 600
	140 000	16 000	18 000	20 000	21 200	20 000	18 000	16 000	15 000	19 000	17 000	16 000	16 000	17 000	19 000	20 000	20 000	10 600	7 500
3 550 000	200 000	13 200	16 000	17 000	19 000	20 000	17 000	13 200	12 500	18 000	15 000	14 000	14 000	14 000	15 000	17 000	19 000	9 500	5 000
	140 000	14 000	17 000	19 000	20 000	19 000	17 000	15 000	14 000	18 000	16 000	15 000	15 000	16 000	18 000	19 000	19 000	10 000	6 700
4 500 000	200 000	12 500	14 000	15 000	17 000	19 000	15 000	12 500	11 200	17 000	14 000	12 500	12 500	12 500	13 200	15 000	17 000	9 000	4 250
	140 000	13 200	15 000	18 000	19 000	18 000	16 000	13 200	12 500	17 000	15 000	13 200	14 000	15 000	17 000	18 000	18 000	9 500	6 000
5 600 000	200 000	11 200	12 500	13 200	16 000	17 000	14 000	11 200	10 000	15 000	12 500	11 800	11 800	11 200	11 800	14 000	15 000	8 500	3 550
	140 000	12 500	14 000	17 000	18 000	17 000	14 000	12 500	11 800	15 000	13 200	12 500	12 500	14 000	15 000	16 000	17 000	8 500	5 300
max		**31 500**																**20 000**	**10 000**

Values valid for metric «Solid low speed shaft»[4)] (see ch.17 (2)).

Sizes **360**

280 000	560 000	40 000	40 000	40 000	40 000	40 000	40 000	40 000	37 500	40 000	40 000	40 000	40 000	40 000	40 000	40 000	40 000	25 000	12 500
	400 000	40 000	40 000	40 000	40 000	40 000	40 000	40 000	40 000	40 000	40 000	40 000	40 000	40 000	40 000	40 000	40 000	25 000	12 500
355 000	560 000	35 500	40 000	40 000	40 000	40 000	40 000	35 500	33 500	40 000	40 000	37 500	37 500	40 000	40 000	40 000	40 000	25 000	12 500
	400 000	37 500	40 000	40 000	40 000	40 000	40 000	40 000	37 500	40 000	40 000	40 000	40 000	40 000	40 000	40 000	40 000	25 000	12 500
450 000	560 000	33 500	40 000	40 000	40 000	40 000	40 000	33 500	31 500	40 000	37 500	33 500	35 500	37 500	40 000	40 000	40 000	25 000	12 500
	400 000	35 500	40 000	40 000	40 000	40 000	40 000	35 500	33 500	40 000	40 000	35 500	37 500	40 000	40 000	40 000	40 000	25 000	12 500
560 000	560 000	30 000	35 500	40 000	40 000	40 000	37 500	31 500	28 000	40 000	35 500	31 500	31 500	31 500	35 500	40 000	40 000	23 600	11 200
	400 000	33 500	37 500	40 000	40 000	40 000	40 000	33 500	31 500	40 000	35 500	33 500	33 500	37 500	40 000	40 000	40 000	23 600	12 500
710 000	560 000	28 000	31 500	35 500	40 000	40 000	35 500	28 000	25 000	37 500	31 500	30 000	30 000	28 000	31 500	35 500	40 000	21 200	9 500
	400 000	30 000	35 500	40 000	40 000	40 000	35 500	31 500	28 000	37 500	33 500	31 500	31 500	33 500	37 500	40 000	40 000	22 400	12 500
	280 000	31 500	35 500	40 000	40 000	40 000	35 500	33 500	31 500	37 500	35 500	33 500	33 500	35 500	37 500	40 000	40 000	23 600	12 500
900 000	560 000	25 000	28 000	31 500	35 500	40 000	33 500	25 000	22 400	35 500	30 000	26 500	26 500	25 000	28 000	31 500	35 500	20 000	8 000
	400 000	28 000	33 500	37 500	40 000	40 000	33 500	28 000	26 500	35 500	31 500	30 000	30 000	31 500	33 500	37 500	40 000	21 200	12 500
	280 000	30 000	33 500	37 500	40 000	37 500	33 500	30 000	30 000	35 500	31 500	31 500	31 500	33 500	35 500	37 500	37 500	21 200	12 500
1 120 000	400 000	25 000	31 500	35 500	37 500	37 500	31 500	26 500	23 600	33 500	30 000	26 500	26 500	30 000	31 500	33 500	37 500	19 000	10 600
	280 000	28 000	31 500	35 500	37 500	35 500	31 500	28 000	26 500	33 500	30 000	28 000	28 000	31 500	33 500	35 500	35 500	20 000	12 500
1 400 000	400 000	23 600	28 000	31 500	35 500	35 500	30 000	23 600	21 200	31 500	26 500	23 600	25 000	26 500	28 000	31 500	33 500	18 000	9 000
	280 000	25 000	30 000	33 500	35 500	33 500	30 000	26 500	23 600	31 500	28 000	26 500	26 500	28 000	31 500	33 500	33 500	18 000	12 500
1 800 000	400 000	21 200	25 000	28 000	31 500	33 500	28 000	21 200	20 000	30 000	25 000	22 400	22 400	22 400	25 000	28 000	31 500	17 000	8 000
	280 000	23 600	28 000	31 500	33 500	31 500	28 000	23 600	22 400	30 000	26 500	23 600	23 600	26 500	30 000	31 500	31 500	17 000	11 200
2 240 000	280 000	21 200	25 000	30 000	31 500	30 000	26 500	22 400	20 000	28 000	23 600	22 400	22 400	25 000	26 500	30 000	30 000	16 000	10 000
	200 000	22 400	26 500	30 000	31 500	30 000	26 500	23 600	22 400	26 500	25 000	23 600	23 600	25 000	28 000	30 000	30 000	17 000	12 500
2 800 000	280 000	20 000	23 600	28 000	30 000	28 000	23 600	20 000	19 000	25 000	22 400	20 000	20 000	22 400	25 000	26 500	28 000	15 000	9 000
	200 000	21 200	23 600	28 000	30 000	28 000	23 600	21 200	20 000	25 000	22 400	21 200	21 200	23 600	25 000	28 000	26 500	15 000	11 200
3 550 000	280 000	18 000	21 200	25 000	28 000	26 500	22 400	18 000	17 000	23 600	20 000	19 000	19 000	21 200	22 400	23 600	26 500	13 200	7 500
	200 000	19 000	22 400	25 000	26 500	26 500	22 400	20 000	19 000	23 600	21 200	20 000	20 000	21 200	23 600	25 000	25 000	14 000	10 000
4 500 000	280 000	17 000	20 000	22 400	25 000	25 000	21 200	17 000	15 000	22 400	19 000	17 000	18 000	19 000	20 000	22 400	23 600	12 500	6 700
	200 000	18 000	21 200	23 600	25 000	23 600	21 200	18 000	17 000	22 400	20 000	18 000	19 000	20 000	22 400	23 600	23 600	13 200	9 000
5 600 000	280 000	15 000	18 000	20 000	22 400	23 600	19 000	15 000	14 000	21 200	18 000	16 000	16 000	16 000	18 000	20 000	22 400	11 800	5 600
	200 000	17 000	19 000	22 400	23 600	22 400	19 000	17 000	16 000	20 000	18 000	17 000	17 000	19 000	21 200	22 400	22 400	11 800	8 000
max		**40 000** (**22 400** for «short side»)																**25 000**	**12 500**

1) An axial load of up to 0.2 times the value in the table is permissible, simultaneously with the radial load. If exceeded consult us.
2) For radial loads acting simultaneously on both sides consult us.
3) An unfavourable direction of load can limit F_{r2} to $0.9 \cdot F_{r2max}$.
4) With hollow low speed shaft F_{r2} and F_{a2} permissible is 0.4 times the one stated in the table.

16.2 - Axial loads F_{a2} [lb] or radial loads F_{r2} [lb] on low speed shaft end

Radial load applied on **groove side •**

Sizes **320, 321**

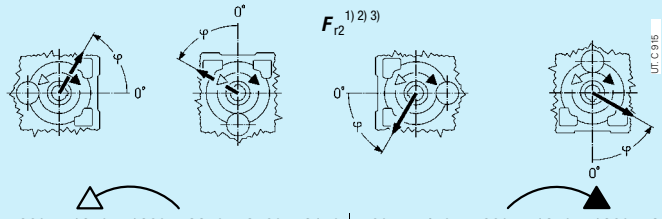

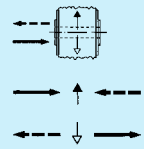

$n_2 \cdot L_h$	T_2	F_{r2} [1) 2) 3)] 0°	45°	90°	135°	180°	225°	270°	315°	0°	45°	90°	135°	180°	225°	270°	315°	F_{a2} [1)]	
rpm · h	lb in																		
280 000	400 000	23 600	31 500	31 500	31 500	31 500	28 000	20 000	19 000	31 500	23 600	22 400	25 000	31 500	31 500	31 500	31 500	20 000	10 000
	280 000	28 000	31 500	31 500	31 500	31 500	31 500	25 000	23 600	31 500	28 000	26 500	30 000	31 500	31 500	31 500	31 500	20 000	10 000
355 000	400 000	21 200	31 500	31 500	31 500	31 500	26 500	18 000	17 000	30 000	21 200	19 000	22 400	31 500	31 500	31 500	31 500	19 000	10 000
	280 000	25 000	31 500	31 500	31 500	31 500	30 000	22 400	21 200	31 500	25 000	23 600	26 500	31 500	31 500	31 500	31 500	20 000	10 000
450 000	400 000	18 000	30 000	31 500	31 500	31 500	23 600	16 000	14 000	26 500	19 000	17 000	20 000	30 000	31 500	31 500	31 500	18 000	8 500
	280 000	23 600	31 500	31 500	31 500	31 500	26 500	21 200	19 000	30 000	23 600	21 200	23 600	31 500	31 500	31 500	31 500	19 000	10 000
560 000	400 000	16 000	28 000	31 500	31 500	31 500	20 000	13 200	11 800	25 000	17 000	15 000	18 000	26 500	31 500	31 500	31 500	17 000	7 100
	280 000	21 200	30 000	31 500	31 500	31 500	25 000	19 000	17 000	26 500	21 200	19 000	21 200	28 000	31 500	31 500	31 500	17 000	10 000
710 000	400 000	13 200	25 000	31 500	31 500	31 500	18 000	11 200	10 000	22 400	15 000	12 500	16 000	22 400	31 500	31 500	31 500	15 000	5 600
	280 000	19 000	26 500	31 500	31 500	31 500	22 400	17 000	15 000	25 000	19 000	17 000	20 000	26 500	31 500	31 500	31 500	16 000	9 500
	200 000	21 200	28 000	31 500	31 500	31 500	25 000	20 000	19 000	26 500	21 200	20 000	22 400	26 500	31 500	31 500	31 500	17 000	10 000
900 000	400 000	11 200	22 400	31 500	31 500	31 500	16 000	9 500	8 500	20 000	12 500	11 200	14 000	20 000	28 000	31 500	31 500	14 000	4 500
	280 000	17 000	25 000	31 500	31 500	30 000	20 000	15 000	13 200	22 400	17 000	16 000	18 000	23 600	31 500	31 500	31 500	15 000	8 500
	200 000	20 000	26 500	31 500	31 500	30 000	22 400	18 000	17 000	23 600	20 000	18 000	20 000	25 000	31 500	31 500	30 000	15 000	10 000
1 120 000	280 000	15 000	23 600	31 500	31 500	28 000	18 000	12 500	11 800	21 200	15 000	14 000	16 000	22 400	30 000	31 500	30 000	13 200	7 100
	200 000	18 000	23 600	31 500	31 500	28 000	20 000	16 000	15 000	22 400	18 000	17 000	19 000	23 600	30 000	31 500	28 000	14 000	9 500
1 400 000	280 000	12 500	21 200	30 000	31 500	26 500	17 000	11 200	10 000	19 000	13 200	11 800	14 000	20 000	26 500	30 000	28 000	12 500	6 000
	200 000	16 000	22 400	30 000	31 500	26 500	19 000	14 000	13 200	20 000	16 000	15 000	17 000	21 200	26 500	30 000	26 500	13 200	8 500
1 800 000	280 000	11 200	19 000	28 000	31 500	25 000	15 000	9 500	9 000	18 000	11 800	10 600	12 500	19 000	23 600	28 000	26 500	11 800	5 000
	200 000	15 000	20 000	28 000	30 000	25 000	17 000	12 500	12 500	19 000	15 000	13 200	15 000	20 000	26 500	28 000	25 000	11 800	7 500
2 240 000	200 000	13 200	19 000	26 500	28 000	22 400	16 000	11 800	11 200	18 000	13 200	12 500	14 000	19 000	23 600	26 500	23 600	11 200	6 700
	140 000	15 000	20 000	23 600	25 000	22 400	17 000	14 000	13 200	18 000	15 000	14 000	16 000	19 000	22 400	25 000	22 400	11 800	8 500
2 800 000	200 000	11 800	18 000	25 000	26 500	21 200	14 000	10 000	9 500	16 000	11 800	11 200	12 500	17 000	22 400	25 000	22 400	10 600	5 600
	140 000	14 000	18 000	22 400	23 600	21 200	16 000	12 500	11 800	17 000	14 000	13 200	14 000	18 000	21 200	23 600	21 200	10 600	7 500
3 550 000	200 000	10 600	16 000	22 400	25 000	20 000	12 500	9 000	8 500	15 000	10 600	9 500	11 200	16 000	20 000	22 400	20 000	9 500	5 000
	140 000	12 500	17 000	21 200	22 400	19 000	15 000	11 200	11 200	16 000	12 500	11 800	13 200	17 000	20 000	22 400	20 000	10 000	6 700
4 500 000	200 000	9 000	15 000	21 200	23 600	19 000	11 800	8 000	7 100	13 200	9 500	8 500	10 000	15 000	19 000	21 200	19 000	9 000	4 250
	140 000	11 800	16 000	20 000	21 200	18 000	13 200	10 600	10 000	15 000	11 800	10 600	11 800	15 000	19 000	21 200	19 000	9 500	6 000
5 600 000	200 000	8 000	13 200	19 000	21 200	18 000	10 600	6 700	6 300	12 500	8 500	7 500	9 000	13 200	17 000	19 000	18 000	8 500	3 550
	140 000	10 600	15 000	19 000	20 000	17 000	12 500	9 500	9 000	13 200	10 600	9 500	11 200	14 000	18 000	20 000	18 000	8 500	5 300
max		**31 500**																**20 000**	**10 000**

Values valid for metric «Solid low speed shaft»[4)] (see ch.17 (2)).

Sizes **360**

280 000	560 000	33 500	40 000	40 000	40 000	40 000	40 000	30 000	28 000	40 000	33 500	31 500	35 500	40 000	40 000	40 000	40 000	25 000	12 500
	400 000	37 500	40 000	40 000	40 000	40 000	40 000	35 500	33 500	40 000	37 500	35 500	40 000	40 000	40 000	40 000	40 000	25 000	12 500
355 000	560 000	30 000	40 000	40 000	40 000	40 000	35 500	26 500	23 600	40 000	31 500	28 000	31 500	40 000	40 000	40 000	40 000	25 000	12 500
	400 000	35 500	40 000	40 000	40 000	40 000	40 000	31 500	30 000	40 000	35 500	33 500	35 500	40 000	40 000	40 000	40 000	25 000	12 500
450 000	560 000	26 500	40 000	40 000	40 000	40 000	33 500	23 600	21 200	37 500	28 000	25 000	28 000	40 000	40 000	40 000	40 000	25 000	12 500
	400 000	31 500	40 000	40 000	40 000	40 000	37 500	30 000	28 000	40 000	31 500	30 000	33 500	40 000	40 000	40 000	40 000	25 000	12 500
560 000	560 000	23 600	37 500	40 000	40 000	40 000	30 000	20 000	18 000	33 500	25 000	22 400	25 000	35 500	40 000	40 000	40 000	23 600	11 200
	400 000	30 000	40 000	40 000	40 000	40 000	33 500	26 500	25 000	37 500	30 000	26 500	30 000	37 500	40 000	40 000	40 000	23 600	12 500
710 000	560 000	20 000	33 500	40 000	40 000	40 000	26 500	17 000	16 000	31 500	22 400	19 000	22 400	33 500	40 000	40 000	40 000	21 200	9 500
	400 000	26 500	35 500	40 000	40 000	40 000	31 500	23 600	21 200	33 500	26 500	23 600	28 000	35 500	40 000	40 000	40 000	22 400	12 500
	280 000	30 000	37 500	40 000	40 000	40 000	33 500	28 000	26 500	35 500	30 000	28 000	30 000	35 500	40 000	40 000	40 000	23 600	12 500
900 000	560 000	17 000	31 500	40 000	40 000	40 000	23 600	15 000	13 200	30 000	19 000	17 000	20 000	30 000	37 500	40 000	40 000	20 000	8 000
	400 000	23 600	33 500	40 000	40 000	40 000	28 000	21 200	19 000	31 500	23 600	23 600	25 000	33 500	40 000	40 000	40 000	21 200	12 500
	280 000	28 000	33 500	40 000	40 000	40 000	31 500	25 000	23 600	33 500	28 000	26 500	28 000	33 500	40 000	40 000	40 000	21 200	12 500
1 120 000	400 000	21 200	31 500	40 000	40 000	37 500	26 500	19 000	17 000	30 000	22 400	20 000	22 400	30 000	40 000	40 000	40 000	19 000	10 600
	280 000	25 000	31 500	40 000	40 000	37 500	30 000	22 400	21 200	31 500	25 000	23 600	26 500	31 500	37 500	40 000	37 500	20 000	12 500
1 400 000	400 000	18 000	28 000	40 000	40 000	35 500	23 600	16 000	15 000	26 500	19 000	17 000	20 000	28 000	35 500	40 000	37 500	18 000	9 000
	280 000	22 400	30 000	37 500	40 000	35 500	26 500	20 000	19 000	28 000	22 400	21 200	23 600	30 000	35 500	37 500	35 500	18 000	12 500
1 800 000	400 000	16 000	26 500	37 500	40 000	33 500	21 200	14 000	12 500	25 000	18 000	15 000	18 000	26 500	33 500	37 500	35 500	17 000	8 000
	280 000	20 000	28 000	35 500	37 500	33 500	23 600	19 000	17 000	26 500	21 200	19 000	21 200	26 500	33 500	35 500	33 500	17 000	11 200
2 240 000	280 000	19 000	26 500	33 500	35 500	31 500	22 400	17 000	16 000	23 600	19 000	18 000	19 000	25 000	31 500	35 500	31 500	16 000	10 000
	200 000	21 200	26 500	31 500	33 500	30 000	23 600	19 000	19 000	25 000	21 200	20 000	21 200	26 500	31 500	33 500	30 000	17 000	12 500
2 800 000	280 000	17 000	23 600	31 500	35 500	30 000	20 000	15 000	14 000	22 400	17 000	16 000	18 000	23 600	30 000	33 500	30 000	15 000	9 000
	200 000	19 000	25 000	30 000	31 500	28 000	22 400	18 000	17 000	23 600	19 000	18 000	20 000	23 600	30 000	31 500	28 000	15 000	11 200
3 550 000	280 000	15 000	22 400	31 500	33 500	28 000	18 000	13 200	11 800	20 000	15 000	14 000	16 000	21 200	28 000	31 500	28 000	13 200	7 500
	200 000	18 000	22 400	28 000	30 000	26 500	20 000	16 000	15 000	21 200	18 000	17 000	18 000	22 400	26 500	30 000	26 500	14 000	10 000
4 500 000	280 000	13 200	20 000	30 000	31 500	25 000	17 000	11 800	10 600	19 000	14 000	12 500	14 000	20 000	26 500	30 000	26 500	12 500	6 700
	200 000	16 000	21 200	26 500	30 000	25 000	19 000	14 000	13 200	20 000	16 000	15 000	17 000	20 000	25 000	28 000	25 000	13 200	9 000
5 600 000	280 000	11 800	19 000	26 500	30 000	23 600	15 000	10 000	9 000	17 000	12 500	11 200	12 500	18 000	23 600	26 500	25 000	11 800	5 600
	200 000	14 000	20 000	25 000	28 000	23 600	17 000	13 200	12 500	19 000	15 000	13 200	15 000	19 000	23 600	26 500	23 600	11 800	8 000
max		**40 000** (**22 400** for «short side»)																**25 000**	**12 500**

1) An axial load of up to 0.2 times the value in the table is permissible, simultaneously with the radial load. If exceeded consult us.
2) For radial loads acting simultaneously on both sides consult us.
3) An unfavourable direction of load can limit F_{r2} to $0.9 \cdot F_{r2max}$.
4) With hollow low speed shaft F_{r2} and F_{a2} permissible is 0.4 times the one stated in the table.

This page is intentionally left blank.

17 – Accessories & non-standard designs

Overview....322
(1) Low speed shaft (sizes 40 ... 360)....323
(2) Solid low speed shaft (sizes 100 ... 360)....324
(3) Oversized hollow low speed shaft (sizes 40, 50, 64, 100)....324
(4) Hollow low speed shaft with front holes (sizes 250 ... 360)....325
(5) Stepped hollow low speed shaft (sizes 64 ... 360)....325
(6) Hollow low speed shaft with shrink disc (sizes 40 ... 360)....326
(7) Protection for hollow low speed shaft with shrink disc (sizes 140 ... 360)....328
(8) Flange (sizes 40 ... 360)....329
(9) Backstop device (sizes 50 ... 360)....330
(10) Reaction bolt using disc spring (sizes 40 ... 360)....331
(11) Kit using reaction disc springs (sizes 40 ... 125)....332
(12) Reaction bolt using disc springs with bracket (sizes 63 ... 225)....333
(13) Rigid or flexible torque arm using bracket (sizes 63 ... 225)....334
(14) Torque arm (sizes 40 ... 81)....335
(15) Fan cooling (sizes 125 ... 360)....336
(16) Water cooling by coil (sizes 125 ... 360)....338
(17) Cooling by internal exchanger (sizes 140 ... 360)....338
(18) Additional oversized housing hole for oil pipe cooling (sizes 160 ... 360)....339
(19) Bearing lubrication pump (sizes 100 ... 360)....340
(20) Hollow low speed shaft washer (sizes 40 ... 360)....340
(21) Hollow low speed shaft washer with locking rings or bushing (sizes 40 ... 360)....340
(22) Hollow low speed shaft protection (sizes 40 ... 360)....340
(23) Design for agitators, aerators, fans (sizes 125 ... 360)....341
(24) Optional paint (sizes 40 ... 360)....342
(25) Heater (sizes 125 ... 360)....344
(26) High and low speed shaft seals (sizes 125 ... 360)....345
(27) Magnetic tap (sizes 125 ... 360)....346
(28) Oil drain tap (sizes 125 ... 360)....346
(29) Independent cooling unit....347
(30) Oil temperature probe (sizes 125 ... 360)....349
(31) Oil temperature probe with terminal box and amperometric transducer 4 ÷ 20 mA (sizes 125 ... 360)....350
(32) Bearing temperature probe (sizes 125 … 360)....351
(33) Bearing temperature probe with terminal box and amperometric transducer 4 ÷ 20 mA (sizes 125 … 360)....352
(34) Bi-metal type thermostat (sizes 100 … 360)....353
(35) Oil level switch with float (sizes 125 … 360)....353
(36) Oil optical probe (sizes 125 … 360)....353
(37) Ex Gear reducer design ATEX II 2 GD and 3 GD (sizes 40 … 360)....354
(38) NEMA C-Face adapter (IEC motor sizes 63 ... 225)....355
(39) Solid low speed shaft with inch diameter (sizes 100 ... 360)....357
(40) Hollow low speed shaft with inch diameter (sizes 40 ... 225)....358
Miscellaneous....359

ATTENTION. The simultaneous presence on the same gear reducer of two or more accessories or non-standard designs is not always possible: consult us for verification.

The dimensions are expressed in mm

Overview

Ref.	Description	Size	Designation
(1)	Low speed shaft	40 … 360 40 … 360	standard low speed shaft double extension low speed shaft
(2)	Solid low speed shaft	100 … 360	solid low speed shaft on opposite groove side solid low speed shaft on groove side solid double extension low speed shaft
(3)	Oversized hollow low speed shaft	40, 50, 64, 100	oversized hollow low speed shaft
(4)	Hollow low speed shaft with front holes	250 … 360	hollow low speed shaft with front holes
(5)	Stepped hollow low speed shaft	64 … 360	stepped hollow low speed shaft
(6)	Hollow low speed shaft with shrink disc	40 … 125 140 … 360 140 … 360	hollow low speed shaft with shrink disc hollow low speed shaft with shrink disc on machine side hollow low speed shaft with shrink disc on machine opp. side
(7)	Protection for hollow low speed shaft with shrink disc	140 … 360	protection for shrink disc
(8)	Flange	40 … 360 63 … 81	flange B5 flange B5 type B
(9)	Backstop device	50 … 360	backstop device free rotation white arrow backstop device free rotation black arrow
(10)	Reaction bolt using disc springs	40 … 360	reaction bolt using disc springs
(11)	Kit using disc springs	40 … 125	kit using disc springs
(12)	Reaction bolt using disc springs and bracket	63 … 225	reaction bolt using disc springs and bracket
(13)	Rigid or flexible torque arm using bracket	63 … 225	rigid torque arm using bracket flexible torque arm using bracket
(14)	Torque arm	40 … 81	torque arm
(15)	Fan cooling	125 … 360	fan cooling fan cooling pos. 1 fan cooling pos. 2 fan cooling pos. 1 and 2
(16)	Water cooling by coil	125 … 360	water cooling by coil water cooling by coil and thermostatic valve
(17)	Independent cooling unit with internal heat exchanger	140 … 360	Independent cooling unit with internal heat exchanger
(18)	Additional oversized housing hole with for cooling oil pipe	160 … 360	additional housing hole with oversized diameter
(19)	Bearing lubrication pump	100 … 360 100 … 360	bearing lubrication pump high speed shaft lubrication device
(20)	Hollow low speed shaft washer	40 … 360	hollow low speed shaft washer
(21)	Hollow low speed shaft washer with locking rings or bushing	40 … 360	hollow low speed shaft washer with locking rings or bushing
(22)	Hollow low speed shaft protection cap	40 … 360	hollow low speed shaft protection cap
(23)	Design for agitators, aerators, fans	125 … 360	design for agitators
(24)	Optional paint	40 … 360	optional paint 1HRAL 5010 optional paint 2HRAL 5010 optional paint 3HRAL 5010 optional paint 2IRAL 5010 optional paint 2LRAL 5010
(25)	Heater	125 … 360	heater
(26)	High and low speed shaft seals	125 … 360	
(27)	Magnetic plug	125 … 360	oil drain magnetic plug
(28)	Oil drain tap	125 … 360	oil drain tap
(29)	Independent cooling unit	–	independent cooling unit oil-air UR O/A … independent cooling unit oil-water UR O/W … independent cooling unit oil-air UR O/A … and bearing and/or gear forced lubrication … independent cooling unit oil-water UR O/W … and bearing and/or gear forced lubrication …
(30)	Oil temperature probe	125 … 360	oil temperature probe
(31)	Oil temperature probe with terminal box and amperometric transducer	200 … 360	oil temperature probe with amperometric transducer
(32)	Bearing temperature probe	200 … 360	bearing temperature probe
(33)	Bearing temperature probe with terminal box and amperometric transducer	200 … 360	bearing temperature probe with amperometric transducer
(34)	Bi-metal type thermostat	100 … 360	bi-metal type thermostat
(35)	Oil level switch with float	125 … 360	oil level switch with float
(36)	Oil optical probe	125 … 360	oil optical probe
(37)	Gear reducer design ATEX II 2 GD and 3 GD	40 … 360 40 … 360 125 … 360	design ATEX II 3 GD T4 design ATEX II 2 GD T4 monthly control design ATEX II 2 GD T4 quarterly control
(38)	NEMA C-Face adapter	IEC 63 … 225	MPN... (see table)
(39)	Solid low speed shaft with inch diameter	100 … 360	solid low speed shaft with inch diameter
(40)	Hollow low speed shaft with inch diameter	40 … 225	hollow low speed shaft with inch diameter

(1) Low speed shaft (sizes 40 ... 360)

This accessory is mounted on the gear reducer. The standard mounting position is with shaft and on opposite side to groove. For opposite mounting position, when possible (for some helical gearmotors MR 2I 40 ... 81 and MR 3I 40 ... 125 (model 2), the low speed shaft cannot overhang from motor side: consult us), state after the designation «groove side assembly».

The external diameter of the element or of the spacer abutting with the gear reducer must be (1.25 – 1.4) · **D**; hole tolerance D H7 ... K7.

Other dimensions at ch. 6 «High and low speed shaft end».

Supplementary description when ordering by **designation**: **standard** or **double extension low speed shaft**.

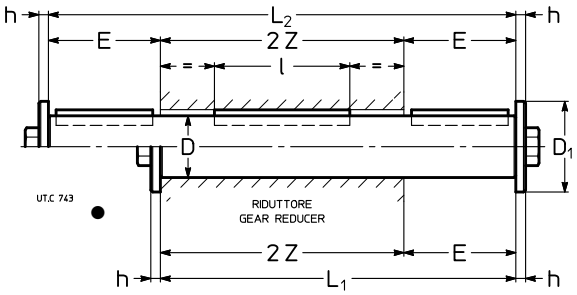

● Position of the reference groove (see ch. 16) for radial load verification.

Size	D Ø	E	D_1 Ø	h	L_1	L_2	l	2 Z	Screw UNI 5737-88	lb Standard	lb Double ext.
40	19 h7	30	28	4	122	152	50	92	M 6×20	0.7	0.9
50	24 h7	36[3)]	35	5	142	178	63	106	M 8×25	1.3	1.5
63	30 h7	58[3)]	47	5	184	242	63	126	M 10×30	2.2	2.9
64	32 h7	58[3)]	47	5	184	242	70	126	M 10×30	2.6	3.3
80	38 h7	58	47	5	208	266	90	150	M 10×30	4.2	5
81	40 h7	58	47	5	208	266	90	150	M 10×30	4.6	6
100	48 h7	82	57	6	262	344	110	180	M 12×40	8	11
125	60 h7	97[1)]	82	8	317	422	140	220	M 16×45	15	21
140	70 h7	105	82	8	355	460	180	250	M 16×45	24	31
160	80 h7	130	102	10	402	532	200	272	M 20×60	40	53
180	90 h7	130	102	10	430	560	200	300	M 20×60	46	62
200	100 j6	165	135	12	499	664	250	334	M 24×60	79	101
225	110 j6	165	135	12	525	690	250	360	M 24×60	86	112
250	125 j6	200[2)]	160	16	612	812	320	412	M 30×70	137	183
280	140 j6	200	160	16	644	844	320	444	M 30×70	181	234
320,321	160 j6	240	205	20	748	988	400	508	M 36×90	276	364
360	180 j6	240	205	20	786	1026	400	546	M 36×90	366	476

1) Value **not** to standard; with double extension low speed shaft E = 101.
2) Value **not** to standard.
3) For MR 3I the dimension E increases of 1.

(2) Solid low speed shaft (sizes 100 ... 360)

Gear reducers and gearmotors sizes 100 ... 360 can be supplied with solid low speed shaft overhanging from groove opposite side, from groove side or from double extension. For sizes 225, 280, and 360 the design foresees oversized bearings in order to allow high radial loads stated on ch. 16. For 3I 100, 125 gear reducers and gearmotors (excluding "long" model 4) execution "integral and double extension low speed shaft **groove side**" not possible.

Other dimensions at ch. 6 «High and low speed shaft end».

1) As alternative to the (not double extension) solid low speed shaft, for sizes 64 ... 81 it is possible to supply the standard low speed shaft axially fastened; the fastening is realized with retaining ring and the dimension E (see ch. 17 (1)) increases by 8 mm: consult us.

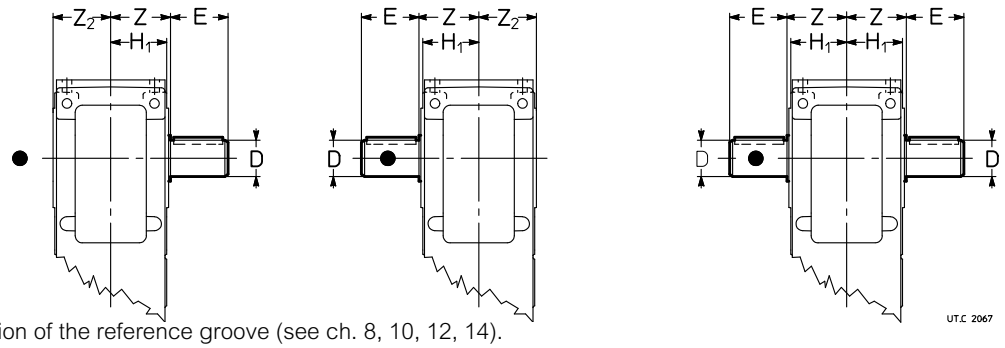

● Position of the reference groove (see ch. 8, 10, 12, 14).

Size	D Ø k6	E	Z	Z_2	H_1
100	48	82	90	88	84.5
125	60	105	110	108	103.5
140	70	105	125	122	103.5
160	80	130	136	133	128.5
180	90	130	150	148	128.5
200	100	165	167	165	158
225	110	165	180	177	158
250	125	200[1]	206	204	195
280	140	200	222	219	195
320. 321	160	240	254	251	241
360	180	240	273	270	241

1) Value **not to** standard.

Supplementary description when ordering by **designation: solid low speed shaft opposite to groove side** or **groove side** or **double extension.**

(3) Oversized hollow low speed shaft (sizes 40, 50, 64, 100)

The gear reducers and gearmotors sizes 40, 50, 64 and 100 can be supplied with oversized hollow low speed shaft; dimensions are according to following table; hollow low speed shaft washer is not available.

Supplementary description when ordering by **designation**: **oversized hollow low speed shaft**.

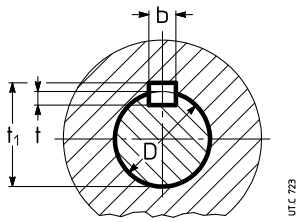

Size	D Ø H7	Parallel key **b × h × l***	Keyway **b**	**t**	t_1
40	20	6 × 6 × 50	6	4.5[1]	22.2[1]
50	25	8 × 7 × 63	8	4.5[1]	27.7[1]
64	35[2]	10 × 8 × 90	10	6.5[1]	36.8[1]
100	50	14 × 9 × 125	14	6.5[1]	52.8[1]

* Recommended length.
1) Values **not** to standard.
2) Without retaining ring groove.

(4) Hollow low speed shaft with front holes (sizes 250 ... 360)

Hollow low speed shaft, sizes 250 … 360, including tapped holes. The dimensions of tapped holes and the maximum axial force deriving from relevant screws class 8.8 are stated in the table.

ATTENTION. **This axial load can be unsufficient to assure the disassembly of gear reducer from machine shaft end**. In fact, according to the selected coupling tolerances to realize the machine shaft end and according to the coupling status – determined by installation environment and duty cycle (e.g.: alternate cycles, with overloads, etc.) – the disassembly operation could require an extraction force even much higher than the thread capacity that could be damaged irremediably.

In these cases, it is necessary to adopt an extraction system through hollow low speed shaft bushing (see ch. 17 (20)).

Supplementary description when ordering by **designation**: **hollow low speed shaft with front holes**.

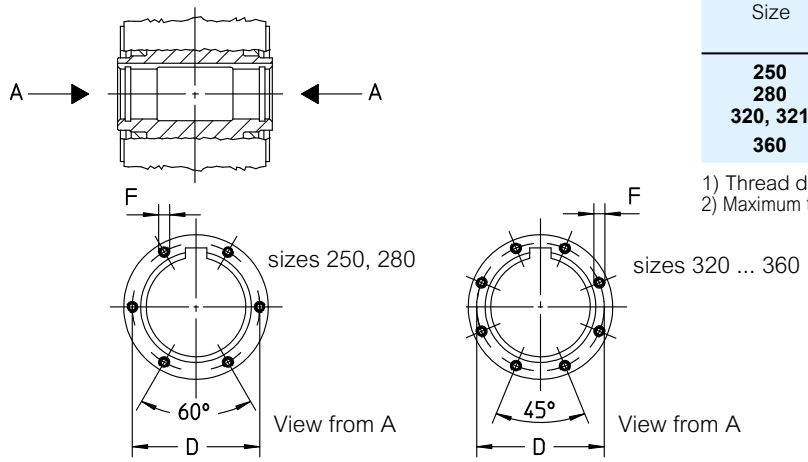

Size	D Ø	F[1]		α [°]	$F_{a\,max}$[2] [lb]
250	144	M8	nr.6	60	22 250
280	162	M10	nr.6	60	35 300
320, 321	182	M10	nr.8	45	47 000
360	212	M12	nr.8	45	68 800

1) Thread depth 2·F.
2) Maximum total axial load relevant to bolts class 8.8.

(5) Stepped hollow low speed shaft (sizes 64 ... 360)

Gear reducers and gearmotors sizes 64 ... 360 can be also supplied with stepped hollow low speed shaft always with keyway; this design **facilitates** installation and removal and **affords a notable increase** in rigidity and resistance to bending and torsional stresses at the shaft end of the driven machine.

Hole with Ø $\mathbf{D_2}$ is always **opposite to groove side**.

Important: the shoulder diameter of the driven machine shaft end abutting with the gear reducer must be at least (1.18 – 1.25) · D.

Supplementary description when ordering by **designation**: **stepped hollow low speed shaft**.

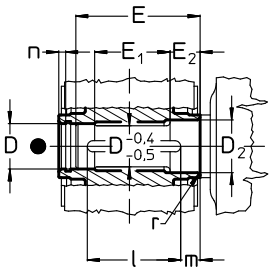

Shaft end of driven machine for fitting with key

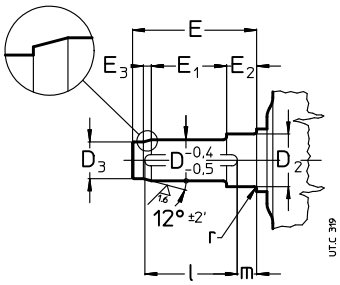

Shaft end of driven machine for fitting with key and locking bushing

Size	D Ø	D_2 Ø	D_3 Ø H7/h6	E 1)	E_1	E_2 1)	E_3	l	m	n	r
	H7/j6, k6										
64	32	35	27	110	63	28	10	70	28	6	1.5
80	38	40	32	134	75	35	12	90	30	6	1.5
81	40	42	34	134	72	38	12	90	30	6	1.5
100	48	52	41	162	92	41	14	110	35	7	2
125	60	65	52	201	118	47	16	140	40	7	2
140	70	75	62	228	135	52	16	180	35	8	2
160	80	85	70	250	147	57	21	200	36	8	3
180	90	100	80	274	162	63	21	200	50	9	3
200	100	110	88	308	188	66	25	250	42	10	3
225	110	120	98	331	195	75	25	250	55	10	3.5
	H7/h6, j6										
250	125	135	110	380	228	84	32	320	40	11	4
280	140	150	125	410	238	94	32	320	60	12	4
320, 321	160	170	140	471	276	107	43	400	45	13	5
360	180	195	160	506	293	116	43	400	72	14	5

● Position of the reference groove (see ch. 8, 10, 12, 14).

1) In presence of «Labyrinth seal and low speed shaft greaser» (ch. 17 (26)), it is necessary to increase the E (E_2) dimension by A quantity stated in the table on ch. 17 (26).

(6) Hollow low speed shaft with shrink disc (sizes 40 ... 360)

Sizes 40 ... 125

Gear reducers and gearmotors sizes 40 ... 125 can be supplied with hollow low speed shaft with shrink disc (see fig. a) – **always opposite side to groove** i.e. opposite side to motor for helical gearmotors – and not rotating protection cap on groove side (excluding input side of helical gear reducers and gearmotors sizes 40, 50 and MR 3I 63).

This design affords a notable increase in rigidity of keying and **reduces** the deformations of shaft end of driven machine (high mass **D**), also permits couplings with passing through shafts (only for bevel helical or long model see fig. c) eventually **avoiding**, when interposed between gear reducer and machine, the necessity of safety guards on the unit itself.

For the shaft end of driven machine on which gear reducer hollow low speed shaft (see fig. b) must be keyed, it is recommended to respect the dimensions stated in the table.

Important: the shoulder diameter of the driven machine shaft end abutting with the gear reducer must be at least (1.18 – 1.25) · D.

Supplementary description when ordering by **designation**: **hollow low speed shaft with shrink disc**

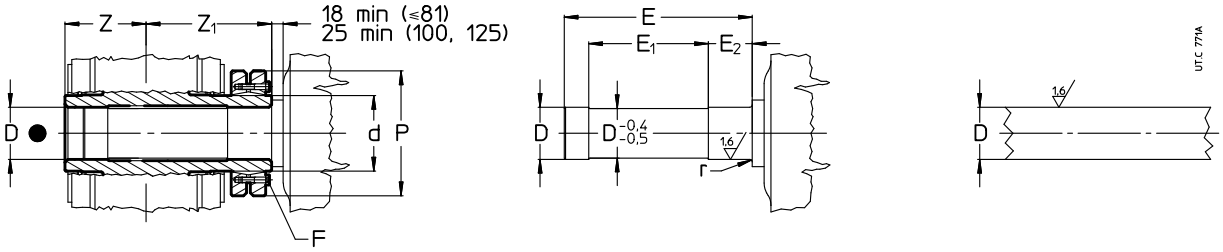

a) Hollow low speed shaft with shrink disc and shaft end of driven machine

b) Shaft end of driven machine

c) Through shaft of driven machine

Size	D Ø H7/j6, h6[1]	E 4)	E_1	E_2 4)	F UNI 5737-88 cl. 10.9	T_s lb in 2)	d	P	r	Z	Z_1	$T_{2\,SD}$ lb in 3)
40	20	99.5	65	25	M5 n.6	35	24	50	0.5	46	69	2 500
50	25	116.5	77	30	M5 n.7	35	30	60	0.5	53	79	3 500
63	30	135.5	86	34	M6 n.5	105	38	72	0.5	63	91	8 500
64	35	140	86	36	M6 n.7	105	44	80	1.5	63	93	12 400
80, 81	40	166	103	39.5	M6 n.8	105	50	90	1.5	75	107	15 900
100	50	197	122	46.5	M8 n.6	265	62	110	2.5	90	125	26 600
125	65	239	148	55	M8 n.8	265	80	145	2.5	110	148	46 000

1) Tolerance g6 also possible for shaft end opposite to shrink disk.
2) Tightening torque.
3) Maximum values for shrink disc.
4) In presence of «Labyrinth seal and low speed shaft grease» (ch. 17 (26)), in case of mounting of the shrink disc on machine opposite side, it is necessary to increase the E (E_2) dimension by A quantity stated in the table on ch. 17 (26).
● Position of the reference groove (see ch. 8,10, 12,14).
For design with labyrinth seals at low speed shaft, the dimensions E, E_1, E_2 are changing: please consult us.

For sizes 80 ... 125 and **train of gears CI and ICI**, it is possible to obtain the **shrink disc opposite side to machine** by selecting a suitable mounting position and design (direction of rotation). A protection for the shrink disc is supplied as standard, see page 328.

Sizes 140 ... 360: side to machine

Gear reducers and gearmotors sizes 140 ... 360 can be supplied with **stepped** hollow low speed shaft with shrink disc **side to machine** – that is **opposite side to groove**, i.e. opposite side to motor for helical gearmotors – and not rotating protection cap on groove side.

This design **facilitates** installation and removal and **affords a notable increase** in rigidity of keying and **reduces** the deformations of machine shaft end, avoids possible problems of interference between shrink disc and motor flange (for helical gear units) and may **avoid** the use of safety guards on the unit itself. Moreover, since deformability of keying area is greater ($d - D_2 < d - D$) and friction area acts on a greater diameter $D_2 > D$), maximum transmissible torque increases by 18 – 25% compared to the solution with shrink disc on opposite side to machine.

For a further axial fastening and in order to facilitate the assembling and disassembling operations (see ch. 18), it is possible to make use of hollow low speed shaft washer with retaining ring and bolt for axial fastening (on request).

For the shaft end of driven machine on which gear reducer stepped hollow low speed shaft must be keyed, it is possible to adopt both «long» and «short» shaft end of driven machine: dimensions as per table (for the other dimensions see ch. 18).

In the first case (fig. c), the assembly operations are facilitated, acting the «long» pivot as a guide. The possible application of a locking bushing with hollow low speed shaft washer (fig. d), reducing the fretting corrosion at the very least, especially facilitates the disassembling operations by giving at the same time a help in the torque transmission.

In the second case (fig. e), the reduced axial dimension of the «short» shaft end of driven machine, limits the mounting and removing overall dimensions at the very least.

In both cases the rigidity and the resistance to bending and torsional stresses at the shaft and of driven machine do not change, since the only surface through which torque transmission occurs is the D_2 one.

Important: the shoulder diameter of the driven machine shaft end abutting with the gear reducer must be at least (1,18 – 1,25) · D.

Supplementary description when ordering by **designation: hollow low speed shaft with shrink disc, on machine side.**

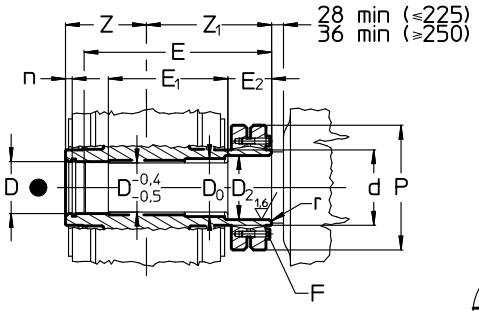

c) Stepped hollow low speed shaft with shrink disc and «long» machine shaft end

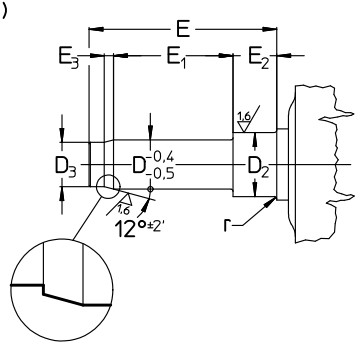

d) «Long» shaft end of driven machine also for locking bushing

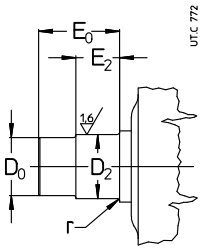

e) «Short» shaft end of driven machine

Size	D Ø	D_2 Ø	D_3 Ø H7/h6	D_0 Ø H7/h6	E	E_0	E_1	E_2	E_3	F UNI 5737-88 cl. 10.9	T_s lb in 1)	d Ø	P Ø	n	r	Z	Z_1	$T_{2\,SD}$ lb in 2)
	H7/j6, k6																	
140	70	75	62	72	273	99	180	52	16	M 8 n. 10	265	90	155	8	2	125	170	85 900
160	80	85	70	82	307	114	199	62	21	M 10 n. 9	530	105	185	8	3	136	193	128 300
180	90	100	80	95	335	124	221	65	21	M 10 n. 12	530	120	215	9	3	150	211	199 100
200	100	110	88	105	377	135	251	72	25	M 12 n. 10	885	130	230	10	3	167	236	287 600
225	110	120	98	115	404	150	265	78	25	M 12 n. 12	885	140	265	10	3.5	180	253	401 800
	H7/h6, j6																	
250	125	135	110	130	461	165	307	86	32	M 16 n. 8	2 210	160	290	11	4	206	287	556 700
280	140	150	125	145	506	185	324	104	32	M 16 n. 10	2 210	180	330	12	4	222	318	757 600
320, 321	160	170	140	165	567	203	375	104	43	M 16 n. 12	2 210	200	350	13	5	254	350	1 078 900
360	180	195	160	190	621	231	400	124	43	M 16 n. 15	2 210	230	370	14	5	273	388	1 522 300

1) Tightening torque.
2) Max transmissible torque relevant to shrink disc; in case of «Short shaft end» (fig. e), consult us.
● Position of the reference groove (see ch. 6).
For design with labyrinth seals at low speed shaft, the dimensions E, E1, E2 are changing: please consult us.

Sizes 140 ... 360: side opposite to machine

Gear reducer and gearmotor sizes 140 ... 360 can be supplied with **stepped** hollow low speed shaft with shrink disc on **opposite machine side**, i.e. **groove side** (see fig. f).

A protection for the shrink disc is supplied as standard, see page 328.

This design, compared with the machine side design, improves the accessibility to the shrink disc but it is more expensive, with lower torsional stiffness and with limits in the max admissible motor size for MR 2I ... UP2 ...; the shrink disc transmits a lower torque and, normally, requires a personal safety-guard (see «Protection for hollow shaft with shrink disc»).

Important: the shoulder diameter of the driven machine shaft end abutting with the gear reducer must be at least (1.18 – 1.25) · D.

Supplementary description when ordering by **designation: hollow low speed shaft with shrink disc, on machine opposite side.**

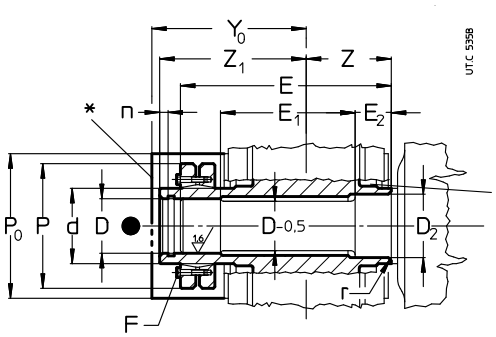

Hollow low speed shaft zone to be protected against fretting corrosion.

f) Stepped hollow low speed shaft with shrink disc and machine shaft end.

● Position of the reference groove (see ch.8, 10, 12, 14).
* Protection for hollow low speed shaft with shrink disc.

Size	MR 2I ... UP2 ... grand. motore max (ved. cap. 12)	D Ø	D_2 Ø	E 3)	E_1	E_2 3)	F UNI 5737-88 cl. 10.9	T_s lb in 1)	n	d Ø	P Ø	r	Z	Z_1	Y_0	P_0	T_2 lb in 2)
		H7/j6, k6															
140	132, 160 B5R	70	75	294.5	192.5	52	M 8 n. 10	265	8	90	155	2	125	191,5	222	234	70 800
160	180	80	85	329	208	57	M 10 n. 9	530	8	105	185	3	136	215	234	234	106 200
180	180, 200 B5R	90	100	363	228	63	M 10 n. 12	530	9	120	215	3	150	239	256	234	159 300
200	225	100	110	402	260	66	M 12 n. 10	885	10	130	230	3	167	261	282	254	230 100
225	225, 250 B5R	110	120	428	277	75	M 12 n. 12	885	10	140	265	3.5	180	277	298	283	323 900
		H7/h6, j6															
250	280	125	135	493	318	84	M 16 n. 8	2 210	11	160	290	4	206	319	345	315	456 700
280	280, 315S B5R	140	150	543	337	94	M 16 n. 10	2 210	12	180	330	4	222	355	381	345	632 800
320, 321	315	160	170	607	388	107	M 16 n. 12	2 210	13	200	350	5	254	390	405	393	902 800
360	315	180	195	668	414	116	M 16 n. 15	2 210	14	230	370	5	273	435	466	394	1 265 700

1) Tightening torque.
2) Maximum values relevant to shrink disc.
3) In presence of «Labyrinth seal and low speed shaft grease» (ch. 17 (26)), it is necessary to increase the E dimension (E_2) by A quantity stated in the table on ch. 17 (26).

(7) Protection for hollow low speed shaft with shrink disc

Safety protections, made of steel, for gear reducers equipped with hollow low speed shaft with shrink disc on machine opposite side (groove side). Normally supplied as standard when ordering the option low speed shaft with shrink disc. For details see below.

Sizes 140 ... 360

For dimensions and assembly sketch see «Low speed shaft with shrink disc on machine opposite side».

The accessory **cannot be supplied** for:

– **R I** gear reducers;

– gear reducers and gearmotors in vertical mounting positions **V5** and **V6 with shrink disc uppermost**;

– **some combined units of helical gearmotors** (UP**2**...) stated in the **table** (for the other gearmotor combined units this accessory will be available).

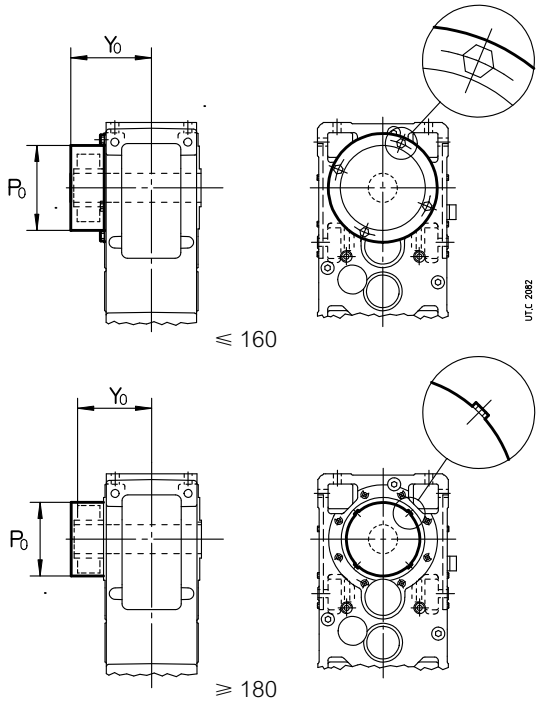

Size MR 2I, 3I UP**2**...	B5 motor size incompatible with accessory
140	≥ 100
160	≥ 160
180	≥ 200
200	≥ 250
225	≥ 250
250	315
280	315

For dimensions $\mathbf{P_0}$ and $\mathbf{Y_0}$ see. ch. 17 (6).

Sizes 80 ... 125

Train of gears CI and ICI for overall dimensions according to table on the right.
For other sizes and train of gears contact Rossi.

Size MR CI, ICI	Y_0	P_0
80, 81	123	114
100	155	134
125	182	184

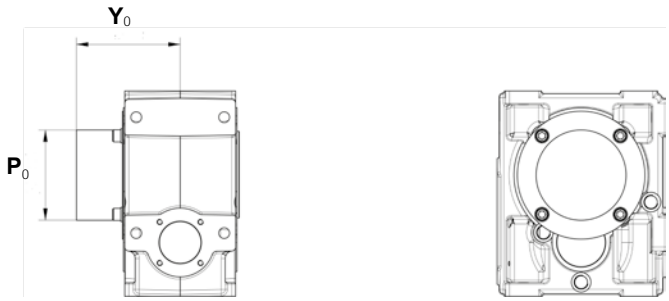

(8) Flange (sizes 40 ... 360)

All gear reducers and gearmotors can be supplied with B5 flange having clearance holes and spigot «recess».
For sizes 63 ... 81, it is available in two versions with different coupling dimensions: **B5 flange** and **B5 flange type B**.
The accessory is supplied fitted onto the gear reducer. Unless otherwise stated, the mounting position is on groove opposite side (input opposite, for helical gear units: for these sizes 40 ... 125 is the only one possible; for greater sizes, consult us). For groove side mounting position (for bevel helical gear units only), state in the designation: «**mounting on groove side**». Locking adhesives such as LOCTITE are recommended both around threads and on mating surfaces.
For dimensions H_1 and Z see ch. 8, 10, 12 and 14.
Supplementary description when ordering by **designation**: **flange B5** or **flange B5 type B** (see table).

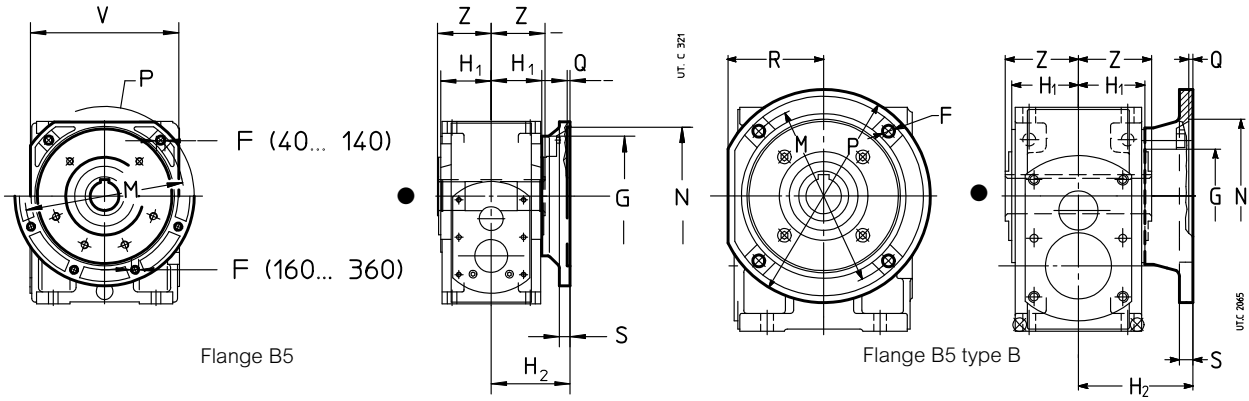

Flange B5

Flange B5 type B

● Position of the reference groove (see ch. 16) for radial load verification.

Size	F Ø	G Ø	H_2 h12	M Ø	N Ø H7	P Ø	Q	R	S	V □	lb	Designation
40	9.5	60	80	115	95	140	4	–	11	110	1.8	**Flange B5**
50	9.5	70	80	130	110	160	4.5	–	12	122	2.2	**Flange B5**
63, 64	11.5	80	100	165	130	200	4.5	–	14	152	4.4	**Flange B5**
63, 64	14	80	107	176	152	210	6	100	14	–	6	**Flange B5** Type **B**
80, 81	14	110	112	215	180	250	5	–	16	196	7	**Flange B5**
80, 81	14	110	129	230	170	280	6	121	16	–	13	**Flange B5** Type **B**
100	14	130	132	265	230	300	5	–	18	248	12	**Flange B5**
125	18	180	154	300	250	350	6	–	20	290	19	**Flange B5**
140	18	230	165	350	300	400	6	–	22	350	29	**Flange B5**
160	18^8	230	191	400	350	450	6	–	22	–	33	**Flange B5**
180	18^8	250	191	400	350	450	6	–	22	–	44	**Flange B5**
200	18^8	300	231	500	450	550	6	–	25	–	55	**Flange B5**
225	22^8	350	231	500	450	550	6	–	25	–	68	**Flange B5**
250, 280	27^8	450	280	600	550	660	7	–	30	–	110	**Flange B5**
320 ... 360	33^8	550	345	740	680	800	7	–	37	–	176	**Flange B5**

(9) Backstop device (sizes 50 ... 360)

For the sizes stated in the table, helical **gear reducers** with $i_N \geqslant$ **10**, bevel helical with $i_N \geqslant$ **12.5** ($i_N \geqslant$ **10** for size 50; $i_N \geqslant$ **11.2** for sizes 160, 200, 250, 320, 321) and helical and bevel helical **gearmotors**, can be supplied together with backstop device; the designs and the positions are the ones stated below. For the value of dimensions **a**, **C**, **H**, $\mathbf{H_1}$, $\mathbf{H_0}$ see ch. 8, 10, 12 and 14.

Supplementary description when ordering by **designation**: **backstop device**, **white or black arrow free-rotation**.

2I[1] **63 ... 360**

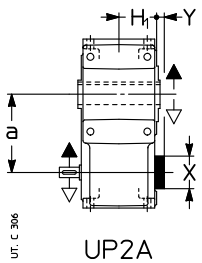

3I 63 ... 125

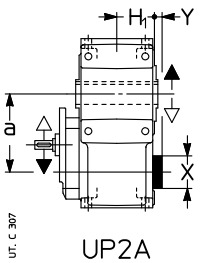

3I 140 ... 360[2]

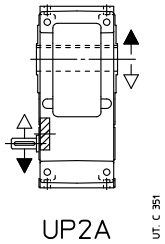

Size	2I, 3I, 4I X Ø	Y
63, 64	47	7
80, 81	52	7
100	62	7
125, 140	72	10
160, 180	90	10
200, 225	110	10
250, 280	130	7
320 ... 360	170	7

1) Also MR 4I sizes 63 ... 125.
* Backstop device doesn't project from dimension H_1. Also available for UP2D, UP4A and UP4D design.

CI[1] **50 ... 100**

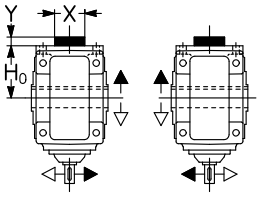

ICI 50 ... 200

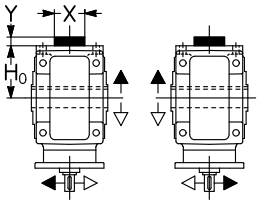

C2I 140 ... 360

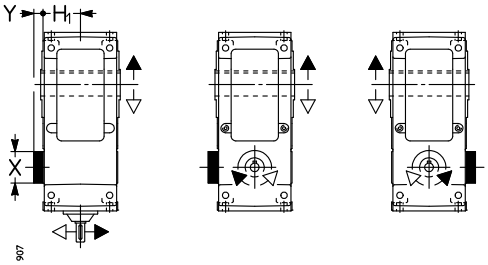

U02H
U02R

U02H sin
U02R sin

1) Also MR C3I sizes 50 ... 125.

CI 125 ... 360

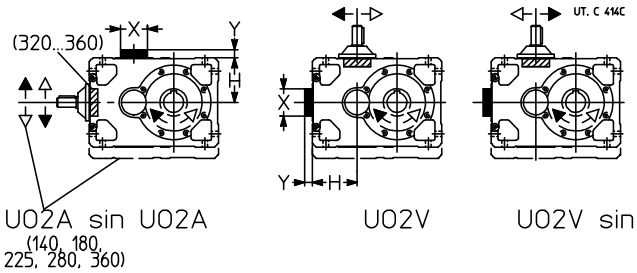

Size	CI, ICI, C3I X Ø	CI, ICI, C3I Y	C2I X Ø	C2I Y
50 ... 64	47	4	–	–
80, 81	52	4	–	–
100	62	4	–	–
125, 140	122	16	72	10
160, 180	155	21	90	10
200, 225	190	21	110	10
250, 280	238	26	130	7
320 ... 360	–[2]	–[2]	170	7

2) Backstop device is fitted between high speed shaft bearings.

Backstop device load capacity

Nominal torque T_{N2} [lb in] of backstop device when lower than T_{N2} of gear reducer (see ch. 9, 11, 13). Maximum permissible overload **1.7 · T_{N2}**.

Size	Train of gears (i_N) T_{N2} [lb in] **3I** *(28)* **C2I** *(20)*	**2I** *(10)* **3I** (**31.5**) **C2I** *(22.4)*	**3I** *(35.5)* **C2I** *(25)*
140	25 000	28 000	31 500
180	50 000	56 000	63 000
225	100 000	112 000	125 000
280	190 000	206 000	236 000
321, 360	375 000	425 000	475 000

(10) Reaction bolt using disc spring (sizes 40 ... 360)

Reaction arrangement for shaft mounting
See technical explanations at ch. 18.
For dimensions **A**, **A**$_1$, **B** see ch. 8, 10, 12 and 14.
For trains of gears CI, ICI, C3I apply this system **preferably** on side **1**; for trains of gears 2I, 3I, 4I **do not** apply on side **2**.
Supplementary description when ordering by **designation**: **reaction bolt using disc springs**.

2I ⩽ 125 ; 3I ⩽ 125 ; 4I

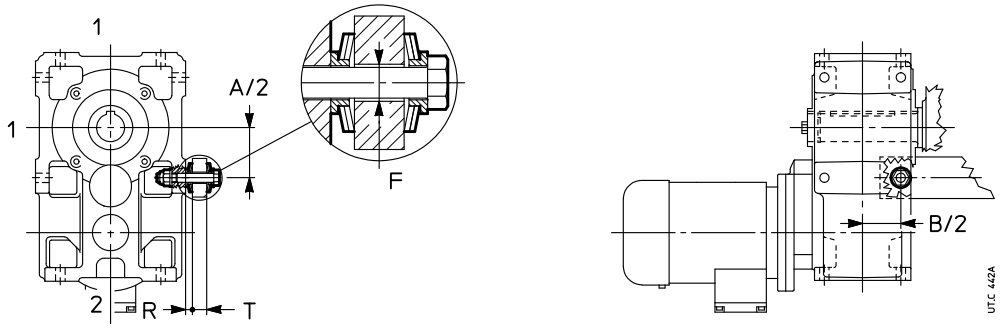

CI ⩽ 100 ; ICI ⩽ 125 ; C3I

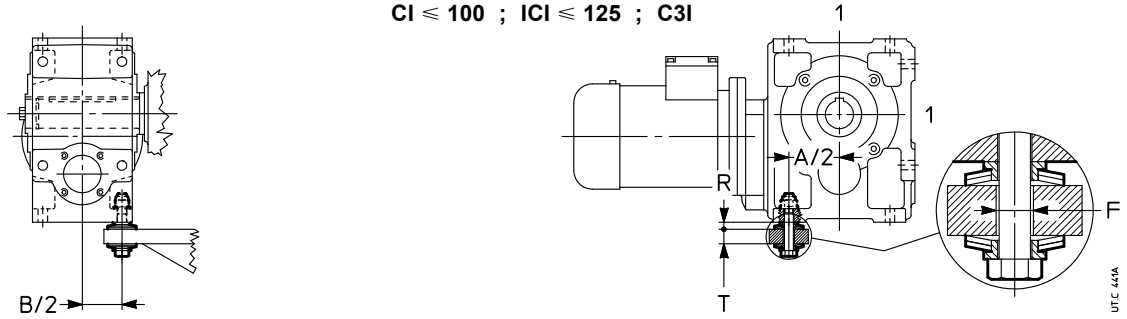

CI ⩾ 125 **2I ⩾ 140 ; 3I ⩾ 140 ; C2I**

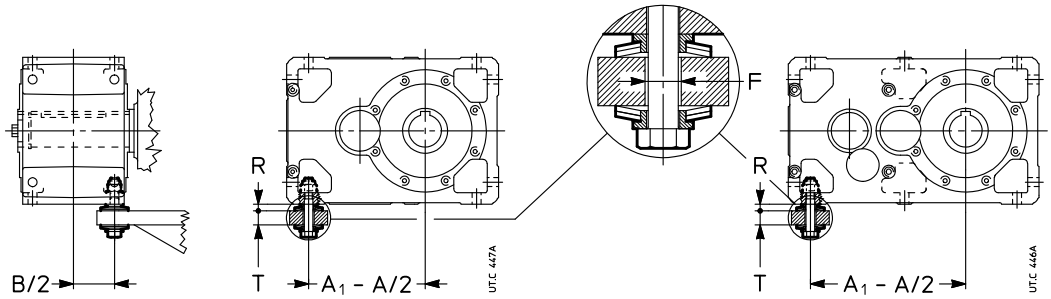

Size	Screw UNI 5737-88	Disc spring DIN 2093		T	F Ø	R 1)	T_2 ⩽ 2) lb in
40	M 6 × 40	A18	n.2	8 - 10	8	4.9	560
50	M 8 × 55	A25	n.2	10 - 14	11	6.5	1 250
63, 64	M 12 × 70*	A35.5	n.2	14 - 17	20	8.8	2 000
80, 81	M 12 × 90	A35.5	n.3	18 - 25	20	10.8	3 550
100	M 16 × 110	A50	n.2	25 - 32	20	13.1	5 600
125, 140	M 16 × 110	A50	n.2	25 - 32	20	13.1	8 750 3)
160, 180	M 20 × 130	A63	n.3	25 - 38	24	17.9	–
200, 225	M 24 × 160	A80	n.2	29 - 48	30	20.7	–
250, 280	M 30 × 200	A100	n.2	37 - 60	36	26.2	–
320 ... 360	M 36 × 260	A100	n.3	45 - 75	42	32.2	–

* Modified bolt.
1) Theoretical value: tolerance 0 - -1.
2) For higher T_2 values, use 2 reaction bolts or the arrangement with bracket (see following page).
3) The limit 8750 lb in is applied only to size 125, for all train of gear excluding train of gear CI.

(11) Kit using reaction disc springs (sizes 40 ... 125)

Reaction arrangement for shaft mounting
See technical explanations at ch. 18.
For dimensions **A**, **A**$_1$, **B** see ch. 8, 10, 12 and 14.
Supplementary description when ordering by **designation**: **kit using reaction disc springs**.

2I ⩽ 125 ; 3I ⩽ 125 ; 4I

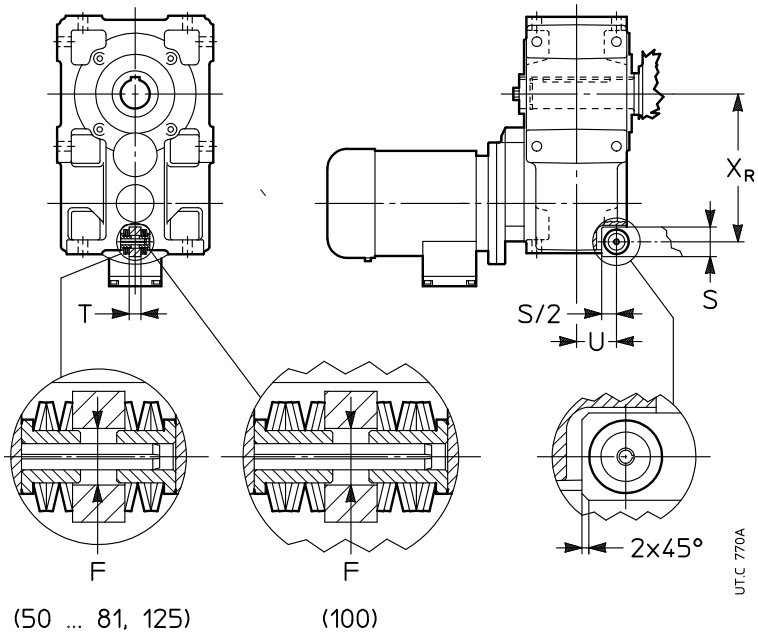

Size	Disc spring DIN 2093		F	T h11	S	x_R	U	T_2 ⩽ lb in
40	A18	n.3	10	10	22	106	32.5	–
50	A25	n.3	13	12	30	130	37.5	–
63	A25	n.3	13	15	35	163	50	–
64	A25	n.3	13	15	35	165	50	3 070[2)]
80, 81	A35.5	n.3	19	20	40	199	54	–
100	A35.5	n.6	19	25	50[1)]	246[3)]	66	–
125	A50	n.3	26	30	60	306[3)]	82	23 000[2)]

1) S/2 = 22.5 mm.
2) For mounting positions B3 and B8.
3) For long model x_R dimension is: 302 (size 80, 81), 351 (size 100), 439 (size 125).

(12) Reaction bolt using disc springs with bracket (sizes 63 ... 225)

Reaction arrangement for shaft mounting

See technical explanations at ch. 18

For dimensions **A**, **A**$_1$, **B** see ch. 8, 10, 12 and 14.

This arrangement can be applied, if need be (overall dimension, less stress or other reasons) on the **short** farthest side from low speed shaft also for parallel shaft gear reducers sizes 63 ... 225.

Supplementary description when ordering by **designation: reaction bolt using disc springs and bracket.**

CI ⩽ 100 ; ICI ; C3I

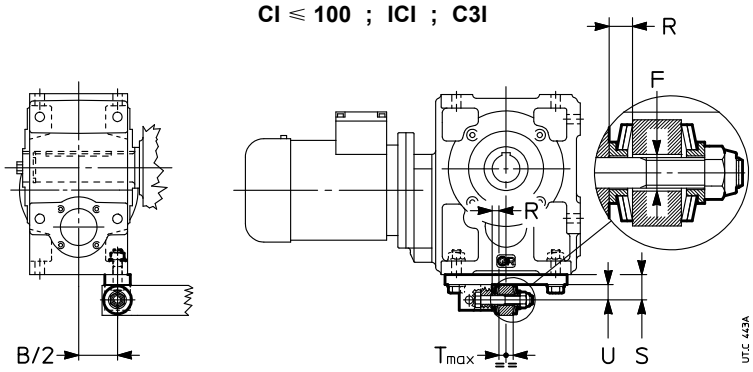

CI ⩾ 125 ; C2I

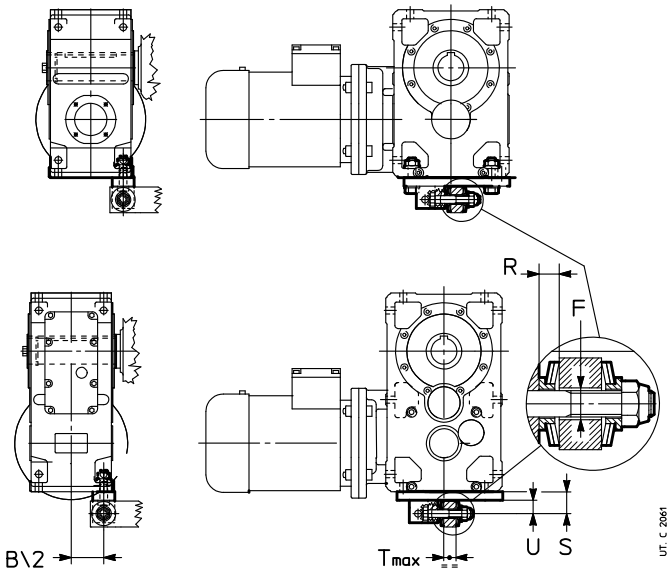

Size	Screw UNI 5737-88	Disc spring DIN 2093		T	F Ø	S	U	R 1)	B/2
63, 64	M 12 × 70*	A 35.5	n.1	14 - 17	20	38	23	6.8	45
80, 81	M 12 × 90	A 35.5	n.2	18 - 25	20	38	23	8.8	53
100	M 16 × 110	A 50	n.2	25 - 32	20	50	30	13.1	65.5
125,140	M 16 × 110	A 50	n.2	25 - 32	20	50	30	13.1	81
160, 180	M 20 × 130	A 63	n.3	23 - 38	24	65	40	17.9	100.5
200, 225	M 24 × 160	A 80	n.2	29 - 48	30	80	48	20.7	125

* Modified bolt.

1) Theoretical value after tightening: tolerance 0 - -1.

(13) Rigid or flexible torque arm using bracket (sizes 63 ... 225)

Reaction arrangement for shaft mounting
See technical explanations at ch. 18.
For dimensions **A**, **A**$_1$, **B** see ch. 8, 10, 12 and 14.
This arrangement can be applied, if need be (overall dimension, less stress or other reasons) on the short farthest side from low speed shaft in all gear reducers sizes 63 ... 225.
Supplementary description when ordering by **designation: rigid** or **flexible torque arm using bracket.**

CI ⩽ 100 ; ICI ; C3I

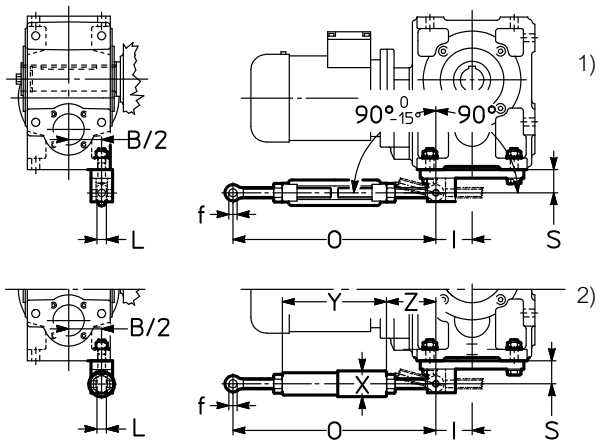

CI ⩾ 125

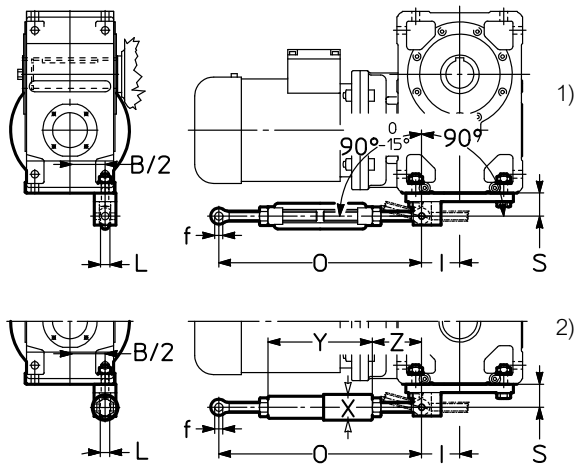

C2I

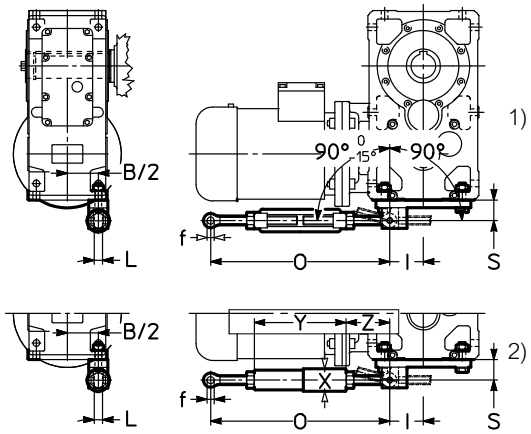

2I ⩾ 140 ; 3I ⩾ 140

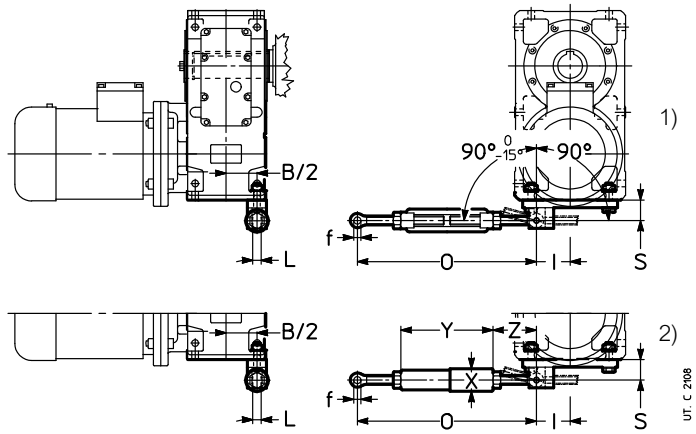

1) Rigid torque arm using bracket.
2) Flexible torque arm using bracket (not supplied for size 63 ... 81).

Size	f Ø	O	S	L	X Ø	Y	Z ≈	I	B/2
63, 64	12	280 – 350	38	14	–	–	–	50	45
80, 81	12	280 – 350	38	14	–	–	–	56	53
100	16	410 – 510	50	17	52	242	84	74	65.5
125, 140	16	410 – 510	50	17	52	242	84	74	81
160, 180	22	580 – 680	65	24	64	285	147	92	100.5
200, 225	28	580 – 680	80	30	88	305	137	113	125

(14) Torque arm (sizes 40 ... 81)

Reaction arrangement for shaft mounting
See technical explanations at ch. 18.
For dimensions **A**, **A**$_1$, **B** see ch. 8, 10, 12 and 14.

The accessory, including fixing bolts for gear reducer, is supplied not assembled. According to motor overall dimensions, the assembly towards motor could not be possible.
Supplementary description when ordering by **designation**: **torque arm.**

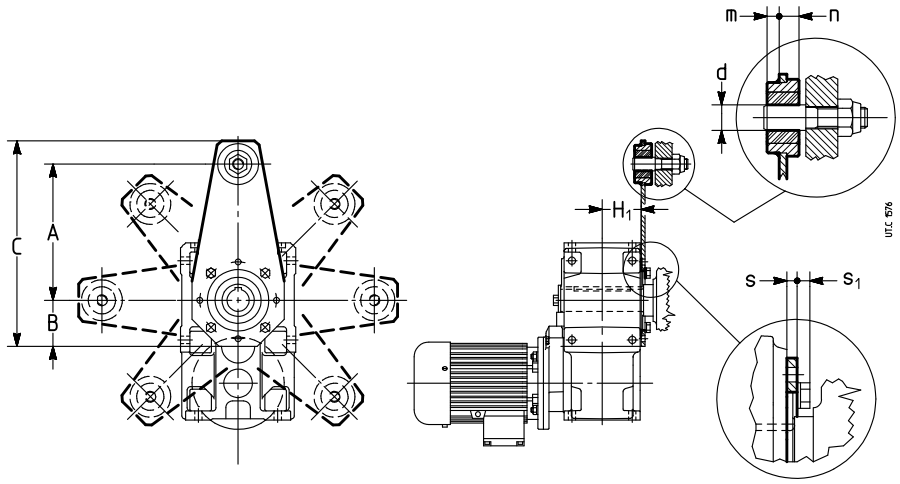

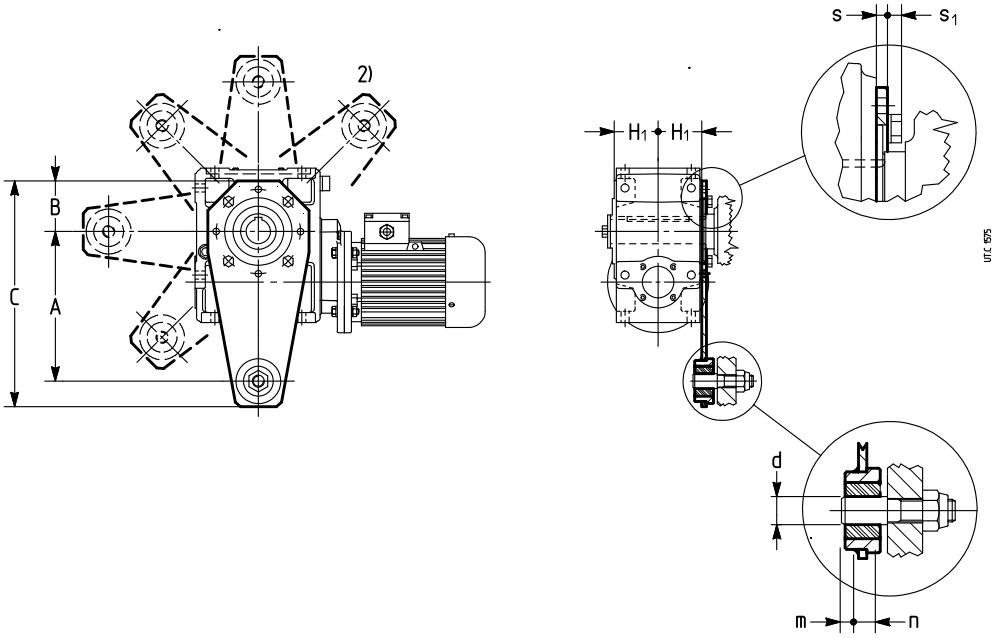

Size	A	B	C	d ∅ H11	H_1 h12	m	n ∅	s	s_1 ≈	T_2 ≤ lb in
40	100	45	157	8[1)]	41.5	5	9	4	4.7	1 180
50	150	52.5	230	10	49	7	13	6	5.6	2 500
63, 64	200	60	294	20	58.5	9.5	15.5	6	7.5	3 000
80, 81	250	80	364	20	69.5	9.5	15.5	6	9.2	6 000

1) Plastic damping bushing not present.
2) Position not possible for train of gears MR ICI.

(15) Fan cooling (sizes 125 ... 360)

The **helical** gear reducers of size and train of gears stated in the table can be supplied with **one** or **two** fans. For the value of dimensions **e**, $\mathbf{e_1}$, and **c**, $\mathbf{c_1}$ see ch. 8

Gearmotors MR 2I 140 ... 360 and MR 3I 140 ... 360 **UP...D** can be supplied fitted with **one** fan.

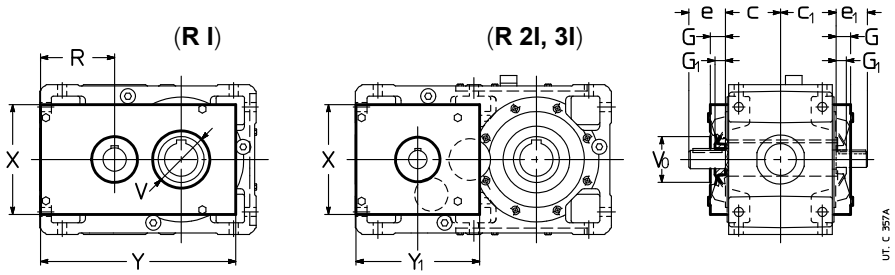

Size		G	G_1	R	V_0 Ø	V Ø 3)	X	Y	Y_1
R I[4]	**R 2I**[4], **R 3I**[4]	1)							
125	**140**	34	25[5]	148	90	90	212	379	247
140	**–**	51	39	148	90	100	240	420	–
160	**160, 180**	38	25[6]	178	110[6]	115	264	469	297
180	**–**	54	39	178	110	130	296	487	–
200	**200, 225**	44	32	223	130	140	326	585	357
225	**–**	44	32	223	140	160	326	610	–
250	**250, 280**	52	40[2]	278	160	175	426	740	447
280	**–**	52	40	278	175	200	426	770	–
320, 321	**320 ... 360**	63	50[2]	353	200	220	554	951	557
360	**–**	63	50	353	220	260	554	991	–

1) Bolts projecting 6 mm from dimension **G**.
2) For R 3I dimension G_1 = 32 (250, 280), 40 (320 ... 360).
3) Only for **second** fan in pos. **2** or, on request, in other cases.
4) Design not possible with B5 flange on fan side; if required, consult us.
5) For R 2I 140 pos. **2** dimension G_1= 15.
6) For R 3I 160 and 180 with $i \geqslant 72$ and/or pos. **2** dimension G_1=15 and dimension V_0=90.

For **R I** gear reducers, the forced cooling with fan is in some cases incompatible with other non-standard designs and accessories, according to the scheme on the following table; consult us, if need be.

Non-standard design	UP...A, UP...L One fan in pos. 1		UP...D One fan in pos. 2		UP...D One fan in pos. 1		UP...D Two fans	
	Groove side •	Groove opposite side	Groove side •	Groove opposite side	Groove side •	Groove opposite side	Groove side •	Groove opposite side
(1) Standard low speed shaft[1]	–	✓	✓	–	–	✓	–	✓
(2) Solid low speed shaft[1]	–	✓	✓	–	–	✓	–	✓
(6) Hollow low speed shaft with shrink disc	–	✓	✓	–	–	✓	–	–
(8) Flange	–	✓	–	–	–	–	–	–

– Design or accessory not possible.
✓ Design or accessory possible.
1) **Double extension** low speed shaft not possible.

Bevel helical gear reducers of size and train of gears indicated in the table can be supplied fitted with **one** fan. See ch. 10 for dimensions **e** and **c**.

Also gearmotors MR CI 125 ... 280, MR C2I 160 ... 360 **... D ...**, **... H ...**, **... R ...** can be supplied fitted with **one** fan.

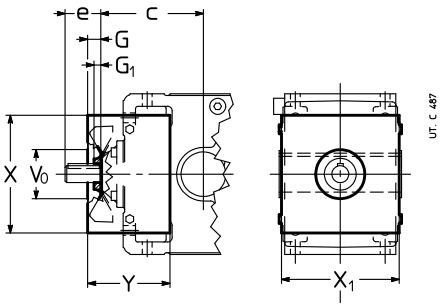

17 - Accessories and non-standard designs

Size CI			G	G_1	V_0 Ø	X	X_1 1)	Y
125	R	$i_N \leqslant 8$	25	15	90	212	212	140
		$i_N \geqslant 9$	25	15	90	212	212	127
	MR		25	15	90	212	212	127
140	R	$i_N \leqslant 9$	25	15	90	212	212	140
		$i_N \geqslant 10$	25	15	90	212	212	127
	MR		25	15	90	212	212	127
160	R	$i_N \leqslant 8$	34	20	110	264	264	209
		$i_N \geqslant 9$	29	15	110	264	264	184
	MR		29	15	110	264	264	184
180	R	$i_N \leqslant 9$	34	20	110	264	264	209
		$i_N \geqslant 10$	29	15	110	264	264	184
	MR		29	15	110	264	264	184
200	R	$i_N \leqslant 8$	41	20	150	326	326	255
		$9 \leqslant i_N \leqslant 16$	41	20	130	326	326	232
		$i_N \geqslant 18$	41	15	130	326	326	232
	MR	$i_N \leqslant 14$	41	20	130	326	326	232
		$i_N \geqslant 16$	41	15	130	326	326	232
225	R	$i_N \leqslant 9$	41	20	150	326	326	255
		$10 \leqslant i_N \leqslant 16$	41	20	130	326	326	232
		$i_N \geqslant 18$	41	15	130	326	326	232
	MR	$i_N \leqslant 16$	41	20	130	326	326	232
		$i_N \geqslant 18$	41	15	130	326	326	232
250	R	$i_N \leqslant 10$	47	25	175	426	404	317
		$11.2 \leqslant i_N \leqslant 16$	46	25	150	426	404	293
		$i_N \geqslant 18$	46	20	150	426	404	293
	MR	$i_N \leqslant 14$	46	25	150	426	404	293
		$i_N \geqslant 16$	46	20	150	426	404	293
280	R	$i_N \leqslant 11.2$	47	25	175	426	404	317
		$12.5 \leqslant i_N \leqslant 16$	46	25	150	426	404	293
		$i_N \geqslant 18$	46	20	150	426	404	293
	MR	$i_N \leqslant 16$	46	25	150	426	404	293
		$i_N \geqslant 18$	46	20	150	426	404	293
320 … 360	R		57	32	220	554	500	392

1) Bolts projecting 6 mm from dimension X_1.

Size C2I			G	G_1	V_0 Ø	X	X_1 1)	Y
160	R	$i_N \leqslant 31.5$	25	15	110	264	264	184
		$i_N \geqslant 35.5$	25	15	110	264	264	173
	MR		25	15	110	264	264	173
180	R	$i_N \leqslant 31.5$	25	15	110	264	264	184
		$i_N \geqslant 35.5$	25	15	110	264	264	173
	MR		25	15	110	264	264	173
200	R	$i_N \leqslant 31.5$	34	20	130	326	326	232
		$i_N \geqslant 35.5$	41	15	130	326	326	222
	MR		41	15	130	326	326	222
225	R	$i_N \leqslant 31.5$	34	20	130	326	326	232
		$i_N \geqslant 35.5$	41	15	130	326	326	222
	MR		41	15	130	326	326	222
250	R	$i_N \leqslant 31.5$	43	20	150	426	404	293
		$35.5 \leqslant i_N \leqslant 63$	41	20	150	426	404	268
		$i_N \geqslant 71$	41	15	150	426	404	268
	MR	$i_N \leqslant 63$	41	20	150	426	404	268
		$i_N \geqslant 71$	41	15	150	426	404	268
280	R	$i_N \leqslant 31.5$	43	20	150	426	404	293
		$35.5 \leqslant i_N \leqslant 63$	41	20	150	426	404	268
		$i_N \geqslant 71$	41	15	150	426	404	268
	MR	$i_N \leqslant 63$	41	20	150	426	404	268
		$i_N \geqslant 71$	41	15	150	426	404	268
320 321 360	R	$i_N \leqslant 31.5$	55	32	220	554	500	365
		$35.5 \leqslant i_N \leqslant 63$	46	25	185	554	500	333
		$i_N \geqslant 71$	46	20	185	554	500	333
	MR	$i_N \leqslant 28$	55	32	220	554	500	365
		$31.5 \leqslant i_N \leqslant 63$	46	25	185	554	500	333
		$i_N \geqslant 71$	46	20	185	554	500	333

1) Bolts projecting 6 mm from dimension X_1.

With double extension high speed shaft designs both extensions are **accessible** even with fan fitted: personnel safety-guards are the Buyer's responsibility (2006/42/EC).

Designs and positions are as shown below.

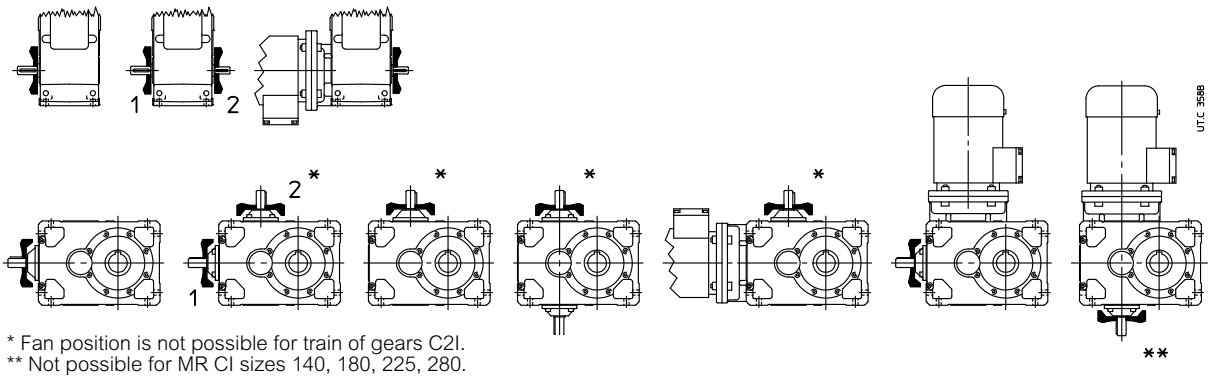

* Fan position is not possible for train of gears C2I.
** Not possible for MR CI sizes 140, 180, 225, 280.

Temperature of cooling air must not exceed ambient temperature.

Supplementary description when ordering by **designation**: **fan cooling**; in design with double extension high speed shaft state if pos. **1** or **2** or – only for helical gear units – **1** and **2**.

Also available independent cooling unit with heat exchanger (see h. 17 (30)); consult us, if need be.

(16) Water cooling by coil (sizes 125 ... 360)

Gear reducers and gearmotors sizes 125 ... 360, excluding ICI train of gears and mounting positions V... with groove side towards the bottom, can be supplied with copper alloy coil for water cooling.

On request, available also stainless steel coil (AISI 316) or cupro-nickel; consult us.

Cooling water specifications:

– be not too hard ≤ 12 °F (French degrees) ;
– max temperature 68 °F (20 °C);
– capacity 2.6 - 5.2 gal/min;
– pressure 29 - 58 psi (2 - 4 bar).

A smooth metallic pipe (with external diameter **d** stated on table) is sufficient for the connection.

The load loss in the coil, according to the water flow and pressure, is of 9 - 12 psi for diameter Ø d16 and 12 - 15 bar for diameter Ød 12.
On request **thermostatic valve** which, automatically and without auxiliary supply need, permits water circulation when gear reducer oil reaches the set temperature; the valve sensor is equipped with immersion bulb. Mounting and setting, adjustable within 122 - 194 °F (50 ÷ 90 °C), are Buyer's responsibility.

For ambient temperature lower than 32 °F (0 °C) consult us.

Supplementary description when ordering by **designation: water cooling by coil** or **water cooling by coil and thermostatic valve.**

Size	**A**[1)] ≈	**B**[1)] ≈	**d** Ø	*Ts*[2)] lb in
125 ... 180	40	40	10	265
200 ... 280	50	40	12	265
320 ... 360	60	45	16	305

1) Values valid for B3 mounting position and U ... A design. For other mounting positions and/or designs: consult us.
2) Tightening torque.

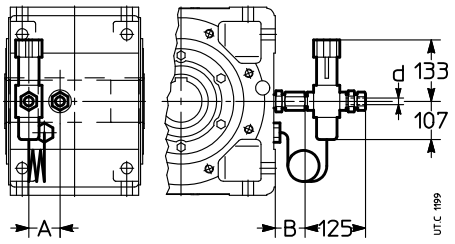

(17) Cooling by internal exchanger (sizes 140 ... 360)

The following gear reducers and gearmotors:

– sizes 140 ... 360;
– helical gear units 2I, 3I;
– bevel helical C2I, design UO2A, ...H, ...V, ...R (excluding the relevant versions sin);

can be equipped with **internal** and **extractable** heat exchanger, made of aluminium, finned, mounted on gear reducer inspection cover (facilitating the maintenance operations) for the water cooling of lubrication oil.

Internal heat exchanger, on gear reducer inspection cover

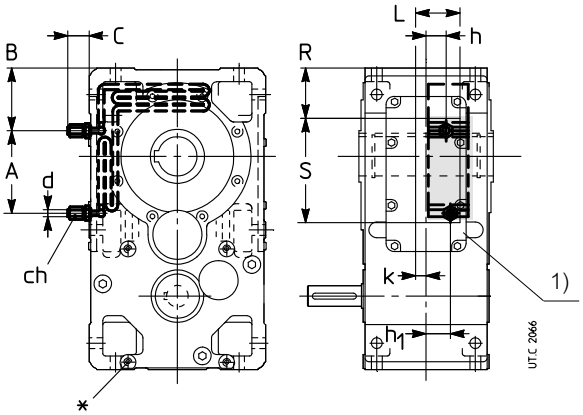

1) Free area for pipe fastening and coil fastening devices.

In case of MR gearmotors mounting positions UO2V ... UO2H the heat exchanger may not be fully extractable.

The value of thermal factor ft_{1b} according to size and mounting position is given in the table.

Size	ft_{1b}			A	B	C	ch	d	h	h_1	K	L	R	S
	B3	B6, B7	B8, V5, V6	≈	≈			Ø						
140	1.7	1.9	1.8	30	81.5	54	22	12	32	19	16	68	60	130
160	2.12	2.36	2.24	0	102	54	22	12	20	46	16	86	77	177
180	2	2.24	2.12	0	102	54	22	12	21	47	15	86	77	177
200	2.24	2.5	2.36	190	152	25	22	12	41	41	14	75	105	263
225	2.12	2.36	2.12	190	152	25	22	12	41	41	14	75	105	263
250	2.36	2.65	2.5	180.5	170.5	25	22	12	50.5	50.5	18	100	125	311
280	2.24	2.5	2.36	180.5	170.5	25	22	12	54	54	15	100	125	311
320, 321	2.12	2.36	2.24	60	255	34	30	16	66	66	2	129	177	302
360	2	2.24	2.12	60	255	34	30	16	66	66	2	129	177	302

Cooling water specifications:
– be not too hard ≤ 12° F (French degrees);
– max temperature max 68 °F (20 °C);
– capacity 2.6 - 5.2 gal/min;
– pressure 29 - 58 psi (2 ÷ 4 bar).

A smooth metallic pipe (with external diameter **d** stated on table) is sufficient for the connection, paying attention to keep fixed the fillet using a second hexagon wrench, when fastening the pipe on the fillet.

The load loss in the internal exchanger, according to the water flow and pressure, is of 20 ÷ 26 psi for diameter Ød 16 and 26 ÷ 29 psi for Ød 12.

On request **thermostatic valve** which, automatically and without auxiliary supply need, permits water circulation when gear reducer oil reaches the set temperature (after technical feasibility verification, consult us); the valve sensor is equipped with immersion bulb. Mounting and setting, adjustable within 122 - 194 °F (50 ÷ 90 °C), are Buyer's responsibility.

For ambient temperature lower than 32 °F (0 °C) consult us.

Supplementary description when ordering by **designation**: **independent cooling with internal exchanger**.

(18) Additional oversized housing hole for cooling oil pipe (sizes 160 ... 360)

In the event of oil cooling system through centralized external circuit (e.g.: paper plants) it is necessary to foresee an additional hole of proper dimensions on gear reducer housing in order to allow the lubricant flow for gravity.

The setting of oil flow at gear reducer input must be executed by the Customer during the installation.

The heat quantity dissipated by the system depends on oil flow and on input and output oil temperature difference.

Available only for mounting positions B3 and B8 and sizes 160 ... 360.

Threaded hole **G 2"** for sizes 160 ... 225 and **G 2 1/2"** for sizes 250 ... 360.

Supplementary description when ordering by **designation**: **additional oversized housing hole**.

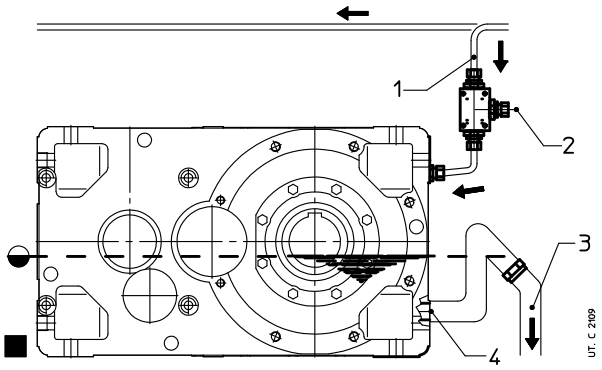

Legend:

1 Oil input.
2 Flow rate fine tuning value
3 Oil drain, towards centralized cooling tank
4 Additional oversized diameter housing hole

(19) Bearing lubrication pump (sizes 100 ... 360)

Piston pump (driven by a cam from the low speed shaft) or **high speed shaft lubrication device** (only R 2I size 100 ... 280 and mounting position V5), for non oil-bath bearing lubrication.

In the following table the cases are stated where for input speed included in the range n_1 = **1 400 - 1 800** rpm it is necessary to foresee the bearing lubrication pump or the high speed shaft lubrication device (see also 💧 at ch. 8, 10, 12, 14). For other speed values, consult us.

In general, when the maximum system reliability is required, in presence of particularly heavy duty cycles or sever ambient conditions, it is necessary to evaluate the possibility to install a bearing lubrication pump; consult us.

Supplementary description when ordering by **designation: bearings lubrication pump or high speed shaft lubrication device.**

Train of gears	Mounting position	Presence of lubrication pump or lubrication device n_1 = **1 400 - 1 800** rpm Gear reducer size					
		100	**125**	**140 ... 180**	**200, 225**	**250, 280**	**320 ... 360**
R I	**V5, V6**	1)	1)	1)	1)	1)	1)
R 2I	**V5**	D[2)]	D[2)]	D[2)]	D[2)]	P	P
	V6	–	–	–	–	–	P
R 3I	**V5**	–	–	P	P	P	P
R CI	**V5, V6**	–	–	–	P	P	P
	B3, B6, B8 with 💧	-	P	P	P	P	P
R C2I	**V5, V6**	–	–	–	–	–	P
	B3, B6 with 💧	-	-	P	P	P	P
MR CI	**B3, B6, B8 with 💧**	-	P	P	P	P	-
MR C2I	**B3, B6 with 💧**	-	-	P	P	P	P

– = Bearing lubrication pump and high speed shaft lubrication device not necessary.
D = Lubrication device.
P = Lubrication pump.
1) Consult us.
2) Lubrication pump on request.

(20) Hollow low speed shaft washer (sizes 40 ... 360)

All gear reducers and gearmotors can be supplied with washer, retaining ring (excluding sizes 40 ... 63), bolt for axial fastening and protection cap (excluding input side of helical gear reducers and gearmotors sizes 40, 50 and gearmotors 3I 63), see ch. 18.

Supplementary description when ordering by **designation**: **hollow low speed shaft washer**.

(21) Hollow low speed shaft washer with locking rings or bushing (sizes 40 ... 360)

All gear reducers and gearmotors (excluding MR 3I 40 ... 63) can be supplied with washer, retaining ring (excluding sizes 40 ... 63), locking rings (sizes 40 ... 63) or locking bushing (sizes 64 ... 360), bolt for axial fastening and protection cap (excluding input side of helical gear reducers and gearmotors, sizes 40, 50), see ch. 18 «Hollow low speed shaft».

ATTENTION. In applications with **travelling lifts**, the locking bushing is not sufficient to assure a stable keying of hollow low speed shaft with machine shaft end, even if the axial fastening screw is fitted with locking adhesive. In these cases, it is necessary to have a keying with hollow shaft and **shrink disc**. This is valid, in general, also for a high frequency of starting and braking with motion reversal and when the inertia ratio J/J_0 is very high ($\geqslant$ 5).

Supplementary description when ordering by **designation: hollow low speed shaft washer with locking rings or bushing.**

(22) Hollow low speed shaft protection cap (sizes 40 ... 360)

The gear reducers and gearmotors, sizes 40 ... 360, can be supplied with a protection cap of the hollow low speed shaft free area (see ch. 18 «Hollow low speed shaft»).

ATTENTION. The protection cannot be mounted:
– on input side of helical gear reducers and gearmotors sizes 40, 50 and gearmotors 3I 63;
– in presence of standard low speed shaft;
– on sizes 180 ... 360 not equipped with the necessary pre-arrangement (e.g.: assembly is not possible for «aftermarket» supplies).

The protection cannot be supplied in presence of:
– double seal on low speed shaft (sizes 63 ... 160);
– labyrinth seal and greaser;

Consult us, if need be.

Supplementary description when ordering by **designation: hollow low speed shaft with protection cap or cover.**

(23) Design for agitators, aerators, fans (sizes 125 ... 360)

This design has been specifically developed for aerators, agitators, and fans with high bending moment values (as a rough guide ⩾ 0,4 · T_2).

In addition to the rigid and precise **single piece** housing, «symmetrical» **universal** mounting, **patented** keying system for motor sizes 200 ... 315 which offers easier assembly and disassembly and avoids fretting corrosion, taper roller bearings, the fundamental characteristics of this **compact, economic and reliable** design are:

– extended bearing housing to improve radial and axial load ratings (taper roller bearings) and to reduce overhungs;
– plentiful low speed shaft end diameter;
– double seals on the low speed shaft with chromium plated raceway;
– space between double seals packed with grease and top hat arrangement which acts as water splash guard for aerators and as slinger for fans;
– oil lubricated bearing on low speed shaft end side: oil-bath for lower position (V5), pump lubrication for upper position (V6) (price addition); additional stainless steel drain plug to facilitate complete **oil** drainage. All this ensures **total reliability** (gear pairs and bearings) during running and **minimum maintenance**;

V5

V6

V6

) Bearing lubrication pump.

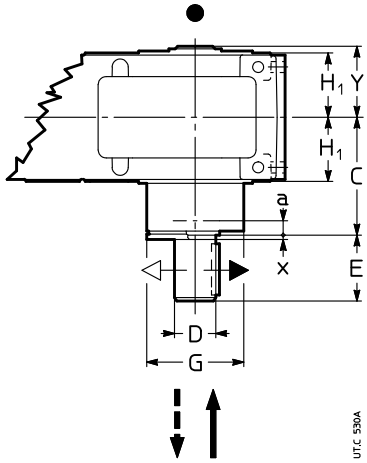

● Position of the reference groove (see ch.8, 10, 12, 14): useful for gear reducer design and mounting position identification on catalog.

Options:
– drip proof cover for motor (standard protection IP 55);
– special paint;
– remote oil level and/or oil temperature indicator with threshold signal (sizes ⩾ 160).

Combinations **2** (direction of rotation – axial load direction) are to be preferred since they permit to withstand the highest of the two F_{a2} axial loads (see following table).

ICI and C3I trains of gears not possible; for CI and C2I, the ...sin designs are not possible.

Supplementary description when ordering by **designation**: **design for agitators**.

IMPORTANT. For selection of the gear reducer or gearmotor size and verification of radial and axial loads (and hence for the need of this design) **we always must be consulted: a detailed program of calculation** enables us to give a quick and reliable answer.

Size	a 1)	C	D Ø m6	E	G Ø	x ≈ 2)	Y	Δm lb	F_{a2} ← ↓	F_{a2} ← ↑	F_{a2} → ↓	F_{a2} → ↑
125	55	220	70	105	140	3	108	25	1	2	2	1
140	62	235	70	105	159	3	122	45	1	2	2	1
160	68	270	90	130	183	4	133	60	2	1	1	2
180	72	275	90	130	226	4	148	85	2	1	1	2
200	76	327	110	165	248	4	164	120	1	2	2	1
225	76	340	110	165	248	4	177	145	1	2	2	1
250	97	402	140	200	310	5	203	230	2	1	1	2
280	97	418	140	200	310	5	218	265	2	1	1	2
320, 321	110	505	180	240	388	6	250	475	1	2	2	1
360	110	523	180	240	388	6	268	550	1	2	2	1

For dimension $\mathbf{H_1}$ see ch. 8, 10, 12 and 14. Other dimensions at ch. 6 «High and low speed shaft end».
1) Position of the center point of the bearing.
2) Thickness of protection disk.

(24) Optional paint (sizes 40 ... 360)

The gear reducers and gearmotors can be supplied with optional painting cycles, according to following table.
Additional description when ordering by **designation**: **optional paint ...** (see code stated in the table; i.e.: «**optional paint 2HRAL5010**».

Application field	Features	Corrosivity class ISO 12944-2	Durability classes ISO 12944-2	Description	Final thickness on machined parts ISO 19840 µm	Code
Applications in aggressive environments	Good resistance to atmospheric and aggressive agents	C4	L	Dual-compound, high-thickness epoxy primer Water-based dual-compound polyacrylic enamel	≥ 160	**1HRAL5010** (blue)
			M [2]	Dual-compound, high-thickness epoxy primer Water-based dual-compound polyacrylic enamel	≥ 180	**2HRAL5010** (blue)
			H [3]	Dual-compound, high-thickness epoxy primer Water-based dual-compound polyacrylic enamel	≥ 240	**3HRAL5010** (blue)
Outdoor applications in saline environment [1]	Excellent resistance to atmospheric and aggressive agents Outdoor applications in saline environment	C 5 [1]	M	Sandblasting Zinc-rich dual-compound anti-rust primer Dual-compound, high-thickness epoxy primer Water-based dual-compound polyacrylic enamel	≥ 240	**2IRAL5010** (blue) [1]
			H [2]	Sandblasting Zinc-rich dual-compound anti-rust primer Dual-compound, high-thickness epoxy primer Sealing with polyurethane sealant Water-based dual-compound polyacrylic enamel	≥ 280	**2KRAL5010** (blue) [1]
Outdoor applications in chemically aggressive environment and high humidity industrial areas [1]	Excellent resistance to atmospheric and aggressive agents Outdoor applications in chemically aggressive environment (fertilizers, etc.)	C 5 [1]	M	Sandblasting Zinc-rich dual-compound anti-rust primer Dual-compound, high-thickness epoxy primer Water-based dual-compound polyacrylic enamel	≥ 240	**2LRAL5010** (blue) [1]
			H [2]	Sandblasting Zinc-rich dual-compound anti-rust primer Dual-compound, high-thickness epoxy primer Sealing with polyurethane sealant Water-based dual-compound polyacrylic enamel	≥ 280	**2YRAL5010** (blue) [1]

1) Available for sizes ≥ 63.

2) Not available on motors.

3) For motors ,C4H possible with cycle 2H sp ≥ 180 µm

NOTE: cycles with specific features: antibacterial for FOOD environments, for ATEX environments, for zinc free environments available on request.

Other colors are available on request, preferred RAL codes are as follows:

1000, 1003, 1004, 1013, 1014, 1015, 1016, 1018, 1021, 1023, 1028,

2000, 2001, 2002, 2003, 2004, 2009, 2010,

3000, 3001, 3002, 3003, 3005, 3007, 3011, 3016, 3020,

4003,

5000, 5001, 5002, 5003, 5005, 5007, 5008, 5009, 5011, 5012, 5013, 5015, 5017, 5018, 5019, 5021, 5022, 5023, 5024,

6000, 6001, 6003, 6004, 6005, 6010, 6011, 6012, 6017, 6018, 6019, 6020, 6021, 6024, 6025, 6026, 6027, 6028, 6029, 6032, 6033, 6037,

7000, 7001, 7004, 7006, 7011, 7012, 7015, 7016, 7021, 7022, 7023, 7024, 7030, 7031,7032, 7033, 7034, 7035, 7036, 7037, 7038, 7040, 7042, 7043, 7044, 7046, 7048,

8012, 8014,

9001, 9002, 9003, 9005, 9011, 9017, 9006, 9007, 9010, 9016, 9018, 9023

(25) Heater (sizes 125 ... 360)

Oil heater for starting at low ambient temperature.
Specify the design «Oil temperature probe» together with this design.
The heater is piloted through proper control device (at customer's care e.g.: PLC or supplied by Rossi e.g. 2-threshold signalling device CT03 or three-threshold signalling device CT10) releasing when achieving the pre-set oil temperature.
IMPORTANT. The data stated in the table refer to **mounting positions B3** and **B8 only**; for other mounting positions, consult us.
The design can be not compatible with other designs (e.g. internal pump...), consult us.
Not possible for train of gears ICI and C3I.
Features:
– specific power 2.5 hp/ft$^{2;}$
– single phase supply 230 V 50-60 Hz or three-phase supply Δ 230 Y 400 V 50-60 Hz (see table);
– stainless steel resistors AISI 321;
– metallic terminal box; cable gland protection IP 65;
– horizontal mounting with oil bath lubrication;
– max oil temperature 194 °F (90 °C);
– threaded brass joint;
– available also in ATEX design; dimension and power values change, please consult us.
Supplementary description when ordering by **designation**: **oil heater**.

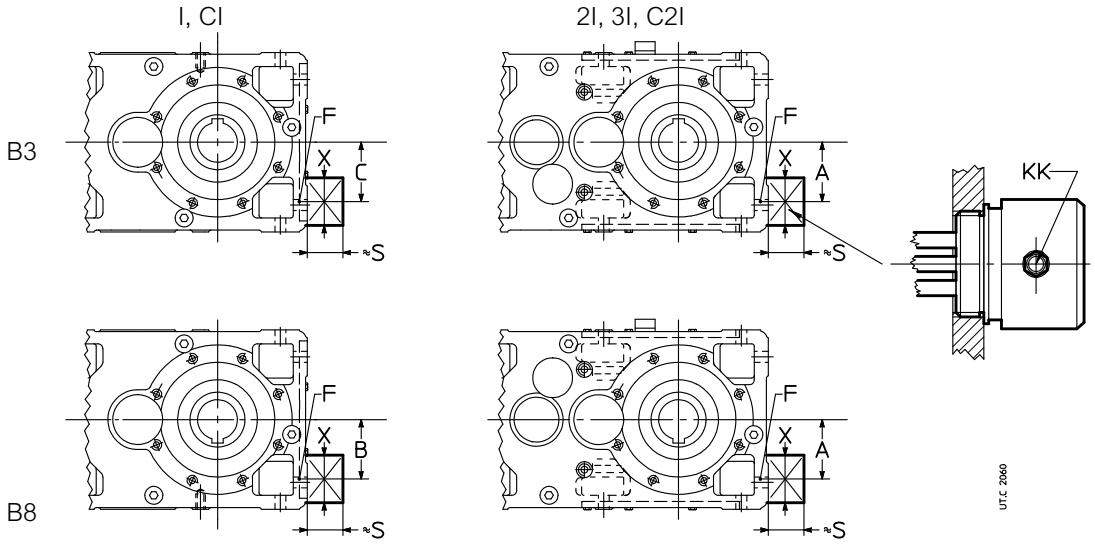

Size	A	B	C	F	L [1] ≈	S ≈	X ≈	P hp	KK	Supply
125	85	85	85	G 1"	215	85	85	0.40	Pg 11	1~ 230 V 50-60 Hz
140	100	85	100							
160	125	114	114	G 1" 1/4	240			0.80		
180		100	125							
200	150	146	146	G 1" 1/2	360	90		1.20	Pg 13	3~ Δ230 Y400 V 50-60 Hz
225		140	155							
250	200	170	170	G 2"	310			2		
280		170	235							
320, 321	250	235	235		410			2.8		
360		222	318							

1) Maximum oil heater length.

Wiring schemes:

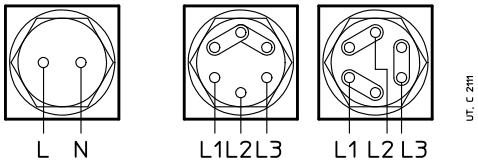

Single-phase connection | Three-phase connection Y | Three-phase connection Δ

(26) High and low speed shafts seals (sizes 125 ... 360)

The seal types available (standard and on request) for sizes 125 ... 360 on low and high speed shaft, are stated in the following table; for size ⩽ 100, consult us.

Type of seal	Scheme
Standard	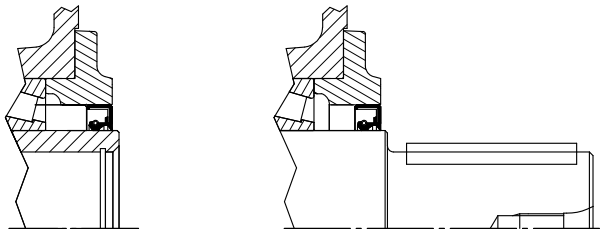
High speed shaft double seal Environment is quite dirty and/ or outdoor	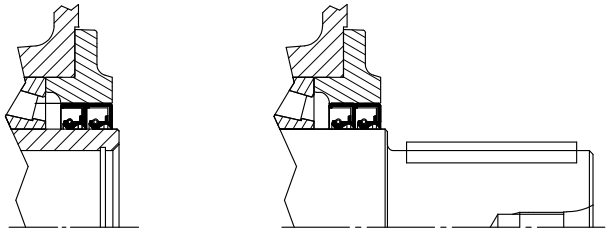
Low speed shaft double seal Environment is quite dirty and/ or outdoor	Additional description when ordering by **designation**: **high speed shaft double seal.** **low speed shaft double seal**.
Labyrinth seal and high speed shaft greaser («taconite») Environment is very dirty (e.g.: mining industry)	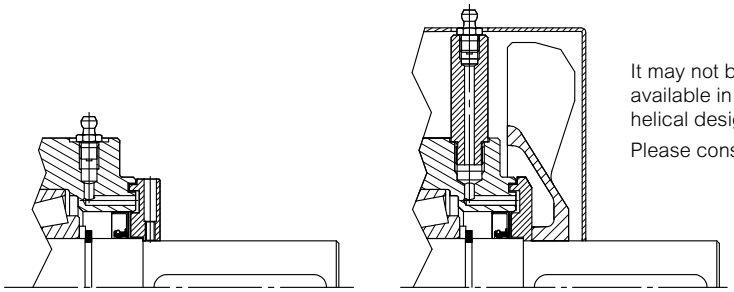 It may not be always available in the bevel helical design with fan. Please consult us. Additional description when ordering by **designation**: **labyrinth seal and high speed shaft greaser.**
Labyrinth seal with low speed shaft greaser («taconite») Environment is very dirty (e.g.: mining industry) 1)	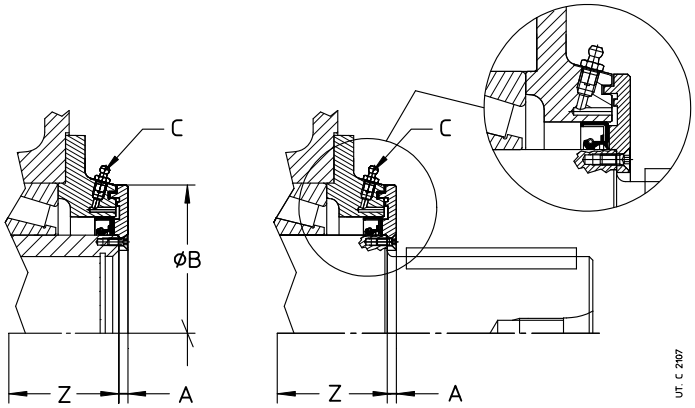 Note: for Z dimension see ch. 8, 10, 12 and 14. Additional description when ordering by **designation**: **labyrinth seal and low speed shaft greaser**.

Size	A	B Ø	C nr.1
125	5	138	M6
140	5	155	M6
160	6	178	M8
180	6	175	M8
200	8	195	M8
225	8	195	M8
250	8	242	M8
280	9	242	M8
320, 321	9	310	M8
360	9	310	M8

1) The labyrinth disc overhangs from A dimension compared with shaft shoulder; the length of low speed shaft end is equal to E - A (for dimension E see ch. 17 (1) and (2)).

Notes.

– The compound of seal rings is acrylonitrilic as standard; on request, seal rings with fluoro compound are available (e.g.: for high temperatures, for aggressive environments or for high rotation speed, etc.); specify in the designation: **seal with fluoro compound**.

– The **double seal of high speed shaft** is generally **to be avoided** as the bigger localized heating reduces the life of seal; for gearmotors the design can be supplied only on the eventual double extension high speed shaft; for gear reducers, the design can be supplied according to the following scheme.

Size	Double seal on high speed shaft											
	R I shaft end		**R 2I** shaft end		**R 3I** shaft end		**R CI** shaft end		**R ICI** shaft end		**R C2I** shaft end	
	normal	double ext.	normal	double ext.	normal	double ext.	normal	double ext.	normal	double ext.	normal	double ext.
125	●	●	●	●	–	●	●	●	–	●	–	–
140	–	–	●	●	●	●	●	●	–	●	●	●
160	●	●	●	●	●	●	●	●	–	●	●	●
180	–	–	●	●	●	●	●	●	–	●	●	●
200, 225	–	–	●	●	●	●	●	●	–	●	●	●
250, 280	–	–	●	●	●	●	●	●	–	–	●	●
320 ... 360	●	●	●	●	–	●	●	●	–	–	●	●

● Design possible
– Design not possible; consult us, if need be.

– In case of **double seal**, the external seal ring can be counter mounted (e.g. in presence of water jets); speficy in the designation: **external ring counter mounted**.

– The design **seal with labyrinth and high speed shaft greaser** can be supplied only after technical verification of feasibility by Rossi S.p.A.: consult us.

– The **hollow shaft with shrink disc** (see ch. 17 (6)) can be supplied with **labyrinth seal** only on **opposite side** to shrink disc; in this case foresee the «**hollow low speed shaft protection with shrink disc**» (see ch. 17 (7)); when this design is not available, consult us.

– For the additional description to the **designation** when ordering, see table on the previous page.

(27) Magnetic plug (sizes 125 ... 360)

In order to reduce lubricant contamination and to increase the maintenance interval and oil replacement, gear reducers and gearmotors size ⩾ 125 can be supplied with magnetic plug.

In presence of oil drain tap (28) the oil drain magnetic plug is mounted in a second drain hole on housing and not in the tap.

Additional description when ordering by **designation**: **oil drain magnetic plug**.

(28) Oil drain tap (sizes 125 ... 360)

The gear reducers and gearmotors size ⩾ 125 can be supplied with oil drain tap (accessory already assembled) in place of the drain plugs (see ch. 8, 10, 12, 14).

Additional description when ordering by **designation**: **oil drain tap**.

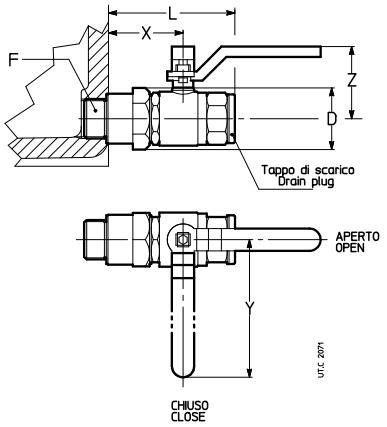

Size	F	D Ø	L ≈	X	Y	Z
125, 140	G 1/2”	31	80	50	80	40
160 - 280	G 3/4”	40	90	56	112	55
320 - 360	G 1”	46	106	66	115	60

(29) Independent cooling unit

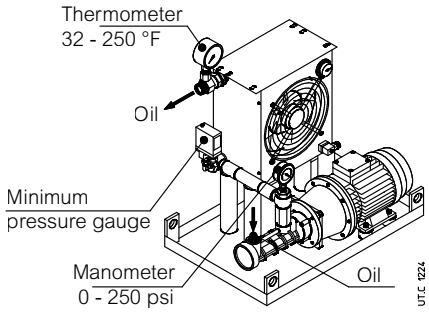

Oil/Air

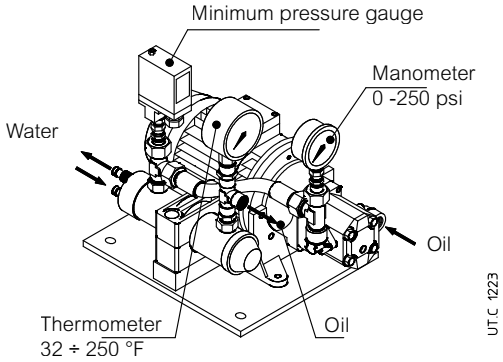

Oil/Water

Additional cooling device in the event that the other forced cooling systems are not sufficient for the dissipation of thermal power produced by gear reducer during operation (see ch. 4).

Including:

– **oil/air heat exchanger** (O/A; with thermostat and adjustable control knob 32 - 194 °F (0 - 90 °C) or **oil/water heat exchanger** (O/W),
– **motor pump**: screw pump with fluoro rubber seals (gear pump for UR O/W 5hp ÷ UR O/W 28hp); 4 pole motor B3/B5 (three-phase Δ230 Y400 V 50 Hz); motor-pump connection with coupling;
– **motor fan** (O/A) (three-phase supply Δ230 Y400 V 50 Hz or single phase supply 230 V 50, 60 Hz, see next table)
– **analogic manometer** 0 - 250 psi (0 - 16 bar) mounted between pump and exchanger;
– **analogic thermometer** 32 - 250 °F (0 - 120 °C) mounted at exchanger output;
– **low pressure switch** (with on-off switch) mounted between pump and exchanger;
– **supporting frame** with nameplate.

On request, several accessories are at disposal (supplied separately, assembled by Customer) in order to satisfy all functionality and safety needs.

– **oil temperature probe Pt100**;
– **2-threshold signalling device CT03** (necessary also the oil temperature probe Pt100) for the mounting on rail to DIN EN 50022;
– **3-threshold signalling device CT10** (necessary also the oil temperature probe Pt100) for the mounting on rail to DIN EN 50022;
– **bi-metal type thermostat**;
– **flow gauge**;
– **filter** (with optical-eletric blockage warning and one or two filters M60)

Connections realized by flexible pipes (type SAE 100 R1, maximum length 2 m) between gear reducer and cooling unit and the assembly of accessories and signalling devices are Buyer's responsibility.

For the heat exchanger power required by the independent cooling unit:

$$\boldsymbol{P}\mathrm{s} \geqslant (\boldsymbol{P}_1 - \boldsymbol{P}\mathrm{t}_N \cdot \boldsymbol{f}\mathrm{t}_1 \cdot \boldsymbol{f}\mathrm{t}_2 \cdot \boldsymbol{f}\mathrm{t}_3 \cdot \boldsymbol{f}\mathrm{t}_4 \cdot \boldsymbol{f}\mathrm{t}_5) \cdot (\mathbf{1} - \boldsymbol{\eta}) \cdot \mathbf{K}_1$$

where:

Ps	nominal power of unit [hp], i.e. the power dissipable with hot oil at approx. 176 °F (80 °C) and cooling air at 104 °F (40 °C) (O/A) or cooling water at 20 °C (O/W) with stated capacity (see next table);
P_1	power at gear reducer input [hp] (consider the power installed when being uncertain about the power absorbed).
$P\mathrm{t}_N$	nominal thermal power of gear reducer [hp] (see ch. 4);
$f\mathrm{t}_1$	thermal factor according to input speed (see ch. 4);
$f\mathrm{t}_2$	thermal factor according to ambient temperature (see ch. 4);
$f\mathrm{t}_3$	thermal factor according to mounting position (see ch. 4);
$f\mathrm{t}_4$	thermal factor according to altitude (see ch. 4); for UR O/A derate also the exchanger power: multiply Ps by 0,85 (for 3 300 - 8 200 ft a.s.l.) or by 0.71 (for 8 200 - 16 400 ft a.s.l.);
$f\mathrm{t}_5$	thermal factor according to air speed on the housing (see ch. 22);
η	gear reducer efficiency (see ch. 6);

K_1 = 1,18 takes into account the decrease of the exchanger efficiency due to dirt on the external surface.

17 - Accessories and non-standard designs

Designation	*P*s hp	Exchanger	Oil motor pump motor 3~ hp	Oil motor pump flow rate ft³/min	Motor fan motor hp	Motor fan flow rate ft³/min	Oil connections intake	Oil connections delivery	Exchanger capacity ft³	lb
UR O/A 7hp	**6.7**	AP 300E	2	1.1	0.20 1~	540	1" (1"1/4)[2]	1" (1"1/4)[2]	0.07	130
UR O/A 9hp	**9.4**	AP 300/2E	2	1.1	0.20 1~	770			0.13	145
UR O/A 13hp	**13**	AP 430E	2	1.1	0.15 3~	1620			0.13	155
UR O/A 17hp	**17**	AP 430/2E	2	1.1	0.19 3~	2060			0.19	165
UR O/A 21hp	**21**	AP 580 EB	3	2	0.19 3~	2830			0.53	210
UR O/A 28hp	**28**	AP 680 EB	3	2	1.41 3~	5180			0.57	260
UR O/A 35hp	**35**	AP 730 EB	4	2	1.41 3~	5180	1" 1/4	1" 1/2 (1")[1]	0.57	280
UR O/A 40hp	**40**	AP 730 EB	4	2.8	1.41 3~	5180			0.57	280
UR O/A 54hp	**54**	AP 830 EB	3	2	1.74 3~	6770			0.71	310
UR O/A 62hp	**62**	AP 830 EB	4	2.8	1.74 3~	6770			0.71	310

Designation	*P*s hp	Exchanger	Oil motor pump motor 3~ hp	Oil motor pump flow rate ft³/min	Water flow rate ft³/min	Water connection	Oil connections intake	Oil connections delivery	Exchanger capacity ft³	lb
UR O/W 5hp	**5.4**	T60CB1	0.5	0.6	⩾ 0.3 (⩽ 1.1)	Ø 12 mm	G 1/2"	G 1/2"	0.01	30
UR O/W 8hp	**8**	T60CB2	0.5	0.6	⩾ 0.4 (⩽ 1.1)	Ø 12 mm	G 1/2"	G 1/2"	0.02	35
UR O/W 12hp	**12**	T80CB2	0.75	0.6	⩾ 0.6 (⩽ 1.1)	Ø 12 mm	G 1/2"	G 1/2"	0.04	40
UR O/W 17hp	**17**	MS84P2	1.5	1.1	⩾ 0.9 (⩽ 1.6)	G 1/2"	G 3/4"	G 3/4"	0.04	70
UR O/W 28hp	**28**	MS134P1	2	1.1	⩾ 1.4 (⩽ 3.9)	G 1"	G 3/4"	G 3/4"	0.11	95
UR O/W 42hp	**42**	MS134P1	3	2	⩾ 1.8 (⩽ 3.9)	G 1"	G 1"1/4	G 1"1/4	0.11	120
UR O/W 67hp	**67**	MS134P2	4	2.8	⩾ 2.8 (⩽ 3.9)	G 1"	G 1"1/4	G 1"1/4	0.16	155

Starting mode and required accessories

Ref.	Gear reducer lubrication system	Gear reducer starting mode	T_{amb} °F (°C)	Required accessories	Required oil type	Description and remarks
A1	Splash lubrication	Without oil pre-heating	32 – 77 (0 – 25)	Pt100 + CT10	Mineral oil or synthetic oil (preferable)	**Gear reducer starting and subsequent motor-pump starting with warm oil**. The motor-pump is managed by the **three-threshold** oil temperature control system (Pt100 + CT10). Set the three-threshold device CT10 with: – operating temperature 140 °F (60 °C) (starting of motor-pump); – restoring temperature 104 °F (40 °C); – warning temperature 194 °F (90° C).
A2	Splash lubrication	Without oil pre-heating	> 77 (> 25)	–	Polyalphaolefine based synthetic oil	**Simultaneous starting of gear reducer and motor-pump** Oil filter not possible[4].
B1	Forced lubrication (bearings and/or gears)	With oil pre-heating	32 – 77 (0 – 25)	Pt100 + CT03 Pt100 + CT10 Oil heater	Mineral oil or synthetic oil (preferable)	**Simultaneous starting of gear reducer and motor-pump after oil pre-heating**[3]. The oil heater is managed by the **two-threshold** oil temperature control system (Pt100 + CT03). The motor-pump and the gear reducer motor are managed by the **three-threshold** oil temperature control system (Pt100 + CT10). Set the two-threshold device CT03 with: – operating temperature 122 °F (50 °C) (oil heater disconnection); – restoring temperature 86 °F (30° C). Set the three-threshold device CT10 with: – operating temperature 104 °F (40 °C) (starting of motor-pump and gear reducer motor); – restoring temperature 50 °F (10 °C); – warning temperature 194 °F (90° C).
B2	Forced lubrication (bearings and/or gears)	Without oil pre-heating	> 77 (> 25)	–	Polyalphaolefine based synthetic oil	**Simultaneous starting of gear reducer and motor-pump**[3] Oil filter not possible[4].

1) Connection for delivery UR O/A 16.
2) Connection for delivery in case of filter.
3) It is advisable to delay the gear reducer motor starting by at least 1 min compared to the motor pump starting.
4) The oil filter requires that cooling unit is started with oil already warm: refer to case A1 or B1.

Additional description when ordering by **designation**:
independent oil-air cooling unit UR O/A ... or **independent oil-water cooling unit UR O/W ...** , possibly integrated, when required by the application, with description: «**Forced lubrication ...**» and the statement of bearings and/or gear pairs to be lubricated. For dimensions, accessories and further technical details, see specific literature.

(30) Oil temperature probe (sizes 125 ... 360)

Remote oil temperature gauge; installation (at Buyer's responsibility) instead of an existing drain plug, or into a hole properly pre-arranged. The temperature gauge is realized with a thermo-resistor *P*t100 having following features:

– platinum wire with 100 Ω at 32 °F (0 °C) according to EN 60751;
– precision class B according to EN 60751;
– operation temperature field -40 °F - +392 ° F (-40 °C - 200 °C);
– max current 3 mA;
– 3 wires connection according to IEC 751 (see fig. below);
– stainless steel probe AISI 316; diameter 6 mm;
– cable 1 m long with free end.

For the connection of probe to relevant signalling device CT03 or CT10 (on request, consult us) use a protected section cable ⩾ 1.5 mm^2 positioned separately from power cables.

In case of gear reducer supplied with oil and optional oil temperature probe, for the assembly of the same probe.

It is necessary to position the gear reducer so that the probe seating hole is upwards; if this is not possible, it is necessary to arrange a probe already equipped with a bulb pre-assembled in the factory, whose position has to be agreed in advance with Rossi; consult us.

Supplementary description when ordering by **designation**: **oil temperature probe**.

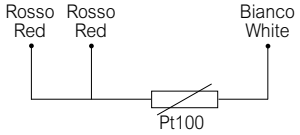

Size	B	Ch (key)	D
125, 140	8	22	G 1/2"
160 ... 280	10	32	G 3/4"
320 ... 360	15	36	G 1"

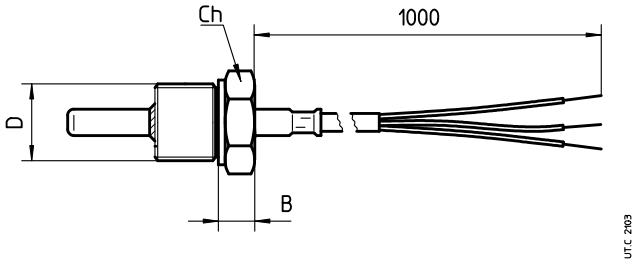

(31) Oil temperature probe with terminal box and amperometric transducer 4 - 20 mA (sizes 125 ... 360)

Remote oil temperature gauge, with terminal box and amperometric transducer; installation (at Buyer's responsibility) instead of drain plug. The temperature gauge is realized with a thermo-resistor Pt100 having following features:

– platinum wire with 100 Ω at 32 °F (0 °C) according to EN 60751;
– precision class B according to EN 60751;
– temperature range -40 °F - 392 °F (-40 °C - 200 °C);
– 3 wires connection according to IEC 751 (see fig. below);
– stainless steel probe AISI 316; diameter 6 mm;
– amperometric transducer with output signal 4 - 20 mA;
– alluminium terminal block (supplied without cable gland);
– protection IP65;
– input cables G ½".

For the connection of probe to relevant signalling device use a protected section cable ⩾ 1,5 mm^2 positioned separately from power cables.

ATTENTION. Accessory available only for technical feasibility evaluation by Rossi S.p.A.: consult us.

In case of gear reducer supplied with oil and optional oil temperature probe, for the assembly of the same probe.

It is necessary to position the gear reducer so that the probe seating hole is upwards; if this is not possible, it is necessary to arrange a probe already equipped with a bulb pre-assembled in the factory, whose position has to be agreed in advance with Rossi; consult us.

Supplementary description when ordering by **designation**: **oil temperature probe with therminal box and amperometric transducer**.

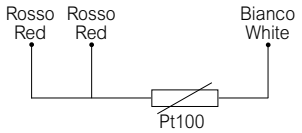

Size	B	Ch (key)	b	D
125, 140	90	24	60	G 1/2"
160 ... 280	92	32	62	G 3/4"
320 ... 360	97	36	67	G 1"

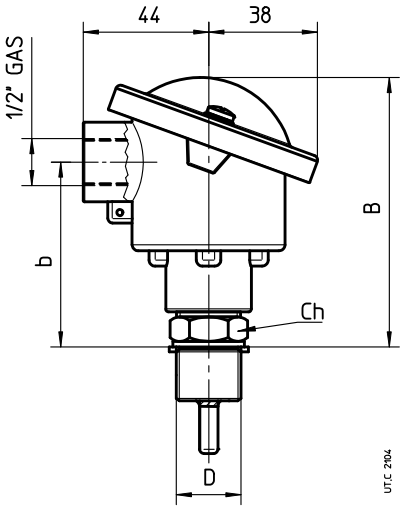

(32) Bearing temperature probe (sizes 125 ... 360)

Probe for the remote monitoring of bearing temperature; installation (at Buyer's responsibility) into a hole properly pre-arranged, next to a bearing to **be agreed during order phase** (for the most common cases, in order to facilitate the identification of bearing to be monitored, refer to following scheme).

The temperature gauge is realized with a thermo-resistor Pt100 having following features:

– platinum wire with 100 Ω at 32 °F (0 °C) according to EN 60751;
– precision class B according to EN 60751;
– temperature range -40 °F - +392 °F (-40 °C - 200 °C);
– max current 40 mA;
– 3 wire connection according to IEC 751 (see fig. below);
– stainless steel AISI 316 flat probe; diameter 6 mm;
– stainless steel sliding fillet.

Not available for ICI and C3I train of gears.

For gearmotors, positions A1 and A2 not available.

For the connection of probe to relevant signalling device CT03 or CT10 use a protected section cable ⩾ 1,5 mm² positioned separately from power cables.

Supplementary description when ordering by **designation**: **bearing temperature probe**.

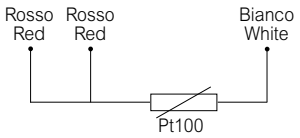

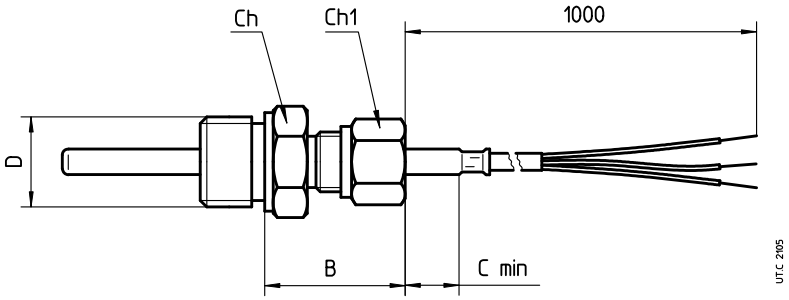

Size	C min	B	Ch (key)	Ch1 (key)	D
125 ... 360	5	32	24	17	G 1/2"

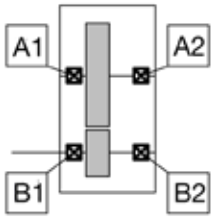

I ... UP2A

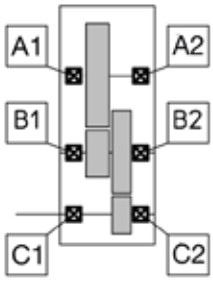

2I ... UP2A

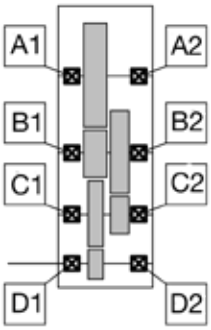

3I ... UP2A

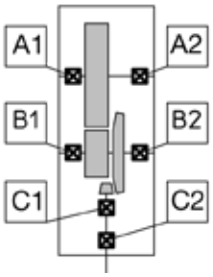

CI ... UO2A (UO2V)

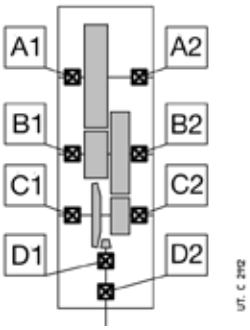

C2I ... UO2A (UO2V)

(33) Bearing temperature probe with terminal box and amperometric transducer 4 - 20 mA (sizes 125 ... 360)

Probe for remote bearing temperature monitoring, with terminal box and amperometric transducer; installation (at Buyer's responsibility) in a threaded hole properly pre-arranged next to a bearing **to be agreed when ordering** (for the most common cases, in order to facilitate the identification of the bearing to be monitored, it is possible to refer to the scheme at (32)).

The temperature gauge is realized with a thermo-resistor Pt100 having following features:

– platinum wire with 100 Ω at 0 °C according to EN 60751;
– precision class B according to EN 60751;
– temperature range -40 °F - +392 °F (-40 °C - 200 °C);
– 3 wire connection according to IEC 751 (see fig. below);
– amperometric transducer with output signal 4 - 20 mA;
– alluminium terminal block (supplied without cable gland);
– protection IP65;
– input cables G ½";
– stainless steel AISI 316 flat probe; diameter 6 mm;
– stainless steel **sliding** fillet.

For the connection of probe to relevant signalling device use a protected section cable ⩾ 1,5 mm² positioned separately from power cables.

Not available for ICI and C3I train of gears.
For gearmotors, positions A1 and A2 not available.
Supplementary description when ordering by **designation**: bearing temperature probe with **amperometric transducer**.

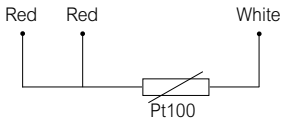

Size	B	b	Ch (key)	Ch1 (key)	D
125 ... 360	134	104	24	17	G 1/2"

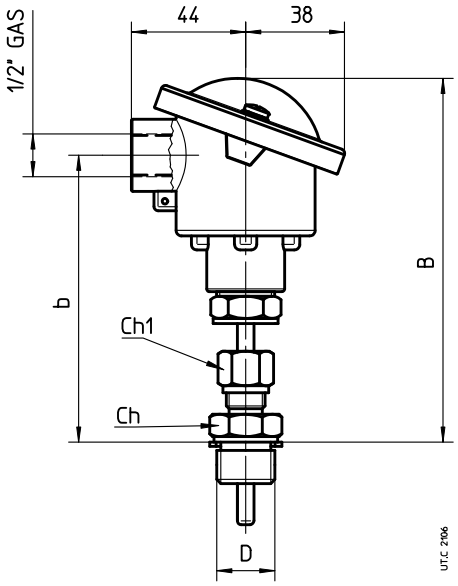

(34) Bi-metal type thermostat (sizes 100 ... 360)

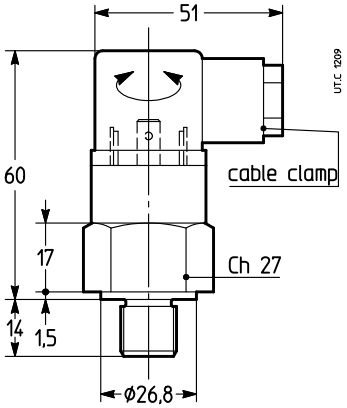

Gear reducers and gearmotors sizes ⩾ 100 can be supplied with bimetal type thermostat for the control of the maximum admissible oil temperature.

Thermostat specifications:

– NC contact with maximum alternate current 10 A - 240 V d.c. (5 A - 24 V d.c.);
– G 1/2" thread connection;
– Pg 09 DIN 43650 cable gland;
– IP65 protection;
– Setting temperature 194 °F ± 9 °F (90 °C ± 5 °C) (other setting temperatures are possible, on request);
– Differential temperature 27 °F (15 °C).

Mounting into a threaded hole (position to be defined according to mounting position and mounting arrangement: consult us) and oil bath lubrication is Buyer's responsibility.

ATTENTION. Accessory available only for technical feasibility evaluation by Rossi S.p.A.: consult us.

Supplementary description when ordering by **designation**: **bimetal type thermostat**.

(35) Oil level switch with float (sizes 125 ... 360)

It is a level control device with reed contacts in a supporting stem moved by the magnetic field activated by the magnets included in the float.

The float and the supporting stem are included in a hollow column of not magnetic material connected to the gear reducer housing through communicating vessels.

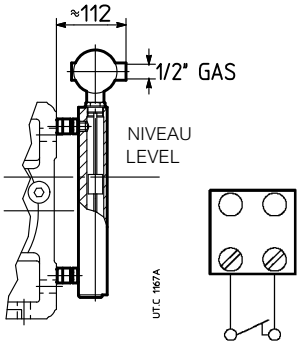

Connecting features:

– 2 wires connection;
– maximum voltage: 350 V
– maximum current: 1.5 A
– 1 cable input 1/2" UNI 6125 – IP65
– G 1" brass joint.

The switch is supplied ready for use; when level goes down approx 5 mm, the switch goes on and contact opens.

When filling oil in the gear reducer it is necessary to verify that device is properly calibrated. If any problems occur during this operation contact Rossi.

ATTENTION. Accessory available only for technical feasibility evaluation by Rossi S.p.A.: consult us.

Supplementary description when ordering by **designation: oil level switch with float**

(36) Oil optical probe (sizes 125 ... 360)

Optical scanner, without mobile parts, for the constant control of oil level, inside the gear reducer (at rest).

Features:

– stainless steel probe;
– operating temperature range -40 °F - +257 °F (-40 °C + 125 °C)
– d.c. supply 12 - 28 V (other types on request, consult us);
– PNP output (other types on request, consult us), max 100 mA;
– male coupling G 3/8", G 1/2", G 3/4", G 1" according to gear reducer size.

Supplementary description when ordering by **designation**: **oil optical probe.**

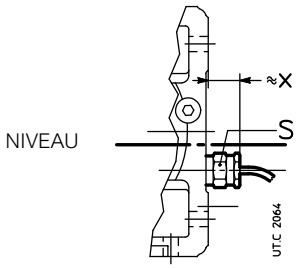

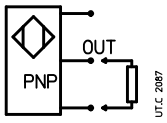

Size	S	x
125 ... 140	27	40
160 ... 360	36	45

(37) Ex Gear reducer design ATEX II 2 GD and 3 GD (sizes 40 ... 360)

Helical and bevel helical gear reducers and gearmotors may be supplied according to Directive ATEX in order to be used in potentially explosive atmospheres – category **2 GD** (for operation in zones 1 (gas), 21 (dust): **probable** presence of explosive atmosphere) and **3 GD** (for operation in zones 2 (gas), 22 (dust): **improbable** presence of explosive atmosphere) – with surface temperature T 135 °C (T4).

These are the main variations of the product:

- fluoro-rubber seal rings;
- metal plugs; filler plug with filter and valve;
- special name plate with ATEX mark and indication of application limits;
- external protection based on a water-soluble dual-compound polyrethane **conductive** enamel, **color grey** RAL 7040, corrosivity class C3 ISO 12944-2;
- «ATEX instructions» manual.

For category **2 GD**[1], depending on **minimum control intervals**, also:

2 GD monthly control

- double seal rings on low speed shaft;

2 GD quarterly control (sizes 125 ... 360):

- double seal rings on low speed shaft;
- oil temperature probe;
- possible bearing temperature probes.

This solution is advisable when the gear reducer has difficult access or when a decrease in control frequency is desired.

Temperature range: -4 °F - +104 °F (-20 - +40 °C); 32 °F - +104 °F (0 - +40 °C) for gear reducers supplied with bearing lubrication pump).

The «**ATEX instructions**» (with the additional documentation, if any) are **integral part of the supply of each gear reducer**; every indication stated in it must be carefully applied. Consult us if need be.

Attention. In the following cases ATEX design of gear reducer is incompatible with accessories and non-standard designs:

Accessory or non-standard design	Gear reducer ATEX II design	
	2 GD	**3 GD**
Hollow low speed shaft with shrink disc (6)	●	●
Optional paint according to cycles 3H..., 2I..., 2L... (24)	○	○
Heater (25)	○	○
Labyrinth seal and greaser (26)	●	●
Independent cooling unit (29)	–	–
Oil temperature probes (30) (31)	○	○
Bearing temperature probes (32) (33)	○	○
Bi-metal type thermostat (34)	–	–
Oil level switch with float (35)	2)	●
NEMA C-Face adapter (38)	●	●
Hollow low speed shaft protection (20) (22) for sizes 63 ... 160	–	–

– Not available.
● Available.
○ Available but in ATEX design suitable for gear reducer's ATEX design and for use purpose and area.
1) The presence of bearing lubrication pump requires one or more additional bearing temperature probes.
2) This accessory is available for category 2 G (zone 1) only.

Gear reducer size selection

Determine the size of gear reducer as indicated in ch. 5 considering following additional indications:

- **maximum input speed $n_1 \leq$ 1 500 rpm**; for other input speed, consult us.
- **service factor required** determined as per ch. 3, increased by table correction factor fs_{ATEX} (see table 1) and anyway **never lower than 1**; inpresence of a hollow shaft with shrink disc (6) verify that maximim peak torque is always lower than T_{2SD} / $f_{S\ ATEX}$ (for T_{2SD} values see ch. 17(6)).
- thermal power Pt verified as per ch. 4 according to nominal thermal power Pt_N increased by thermal factors ft_1[1] ... ft_4 and ft_{ATEX} corrective factor(see table 1).

Table 1 - Corrective factors for ATEX design of service factor required and of nominal thermal power

Category	fs_{ATEX}	ft_{ATEX}
2 GD	1,.8	0.8 (0.71 for I and CI)
3 GD	1.06	0.9 (0.8 for I and CI)

1) When determining ft_1 consider a value of ft_{1a} (see page 28) **never exceeding 1**.

Supplementary description when ordering by **designation**[2]:

design ATEX II ...

... 3 GD T4	sizes 40 ... 360
... 2 GD T4 monthly control	sizes 40 ... 360
... 2 GD T4 quarterly control	sizes 125 ... 360

2) This designation, in case of gearmotor, refers to the gear reducer part only.

(38) NEMA C-Face adapter (IEC motor sizes 63 ... 225)

Accessory for the transformation of motor coupling dimensions, at gearmotor input, from IEC to NEMA C-Face; available for IEC-NEMA motor size combinations stated in the table; other combinations on request; consult us. Mounted on gear reducer.

For the **verification of maximum flange bending moment MR** (see ch. 6) it is necessary to add the value of Y2 [mm] to HF dimension (ch. 6) and include in the mass of motor NEMA [kg] the mass of adapter [kg].

Supplementary description when ordering by **designation**: **MPN ...** (see following page).

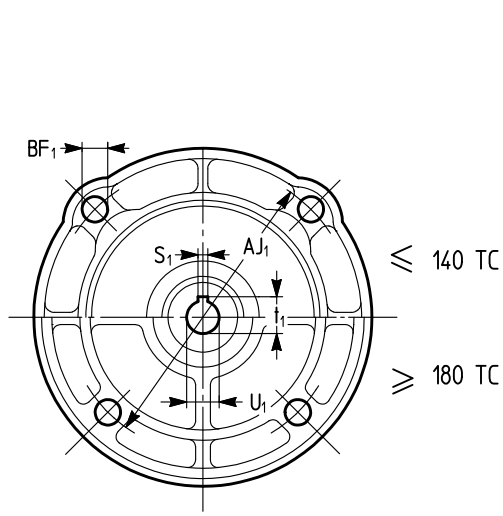

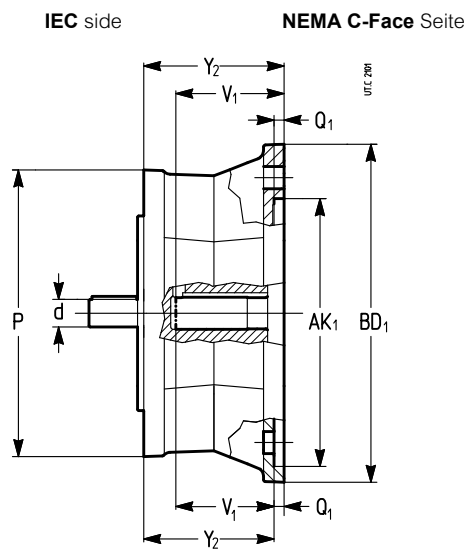

IEC side		NEMA C-Face side													
d × P Ø Ø	IEC motor size	NEMA motor size	U_1 Ø	V_1	S_1	t_1	BF_1 Ø	AJ_1 Ø	AK_1 Ø	BD_1 Ø	Q_1	Y_2	kg lb	Designation code
			1) mm *in*	mm *in*	2) mm *in*	mm *in*	mm *in*	mm *in*	3) mm *in*	mm *in*	mm *in*	mm *in*	kg *lb*	
11 × 140	63B5	**56C**	15.9 *0.625*	52.3 *2.06*	4.8 *0.188*	18.0 *0.709*	10.9 *0.43*	149.2 *5.875*	114.3 *4.5*	165.1 *6.5*	5.1 *0.2*	68.6 *2.7*	3.1 *6.9*	**MPN 63 B5 - 56 C**
14 × 140	71B5A	**56C**	15.9 *0.625*	52.3 *2.06*	4.8 *0.188*	18.0 *0.709*	10.9 *0.43*	149.2 *5.875*	114.3 *4.5*	165.1 *6.5*	5.1 *0.2*	68.6 *2.7*	3.1 *6.9*	**MPN 71 B5A - 56 C**
14 × 160	71B5	**56C**	15.9 *0.625*	52.3 *2.06*	4.8 *0.188*	18.0 *0.709*	10.9 *0.43*	149.2 *5.875*	114.3 *4.5*	165.1 *6.5*	5.1 *0.2*	68.6 *2.7*	3.4 *7.5*	**MPN 71 B5 - 56 C**
19 × 160	80B5A	**56C**	15.9 *0.625*	52.3 *2.06*	4.8 *0.188*	18.0 *0.709*	10.9 *0.43*	149.2 *5.875*	114.3 *4.5*	165.1 *6.5*	5.1 *0.2*	68.6 *2.7*	3.4 *7.6*	**MPN 80 B5A - 56 C**
19 × 200	80B5	**56C**	15.9 *0.625*	52.3 *2.06*	4.8 *0.188*	18.0 *0.709*	10.9 *0.43*	149.2 *5.875*	114.3 *4.5*	165.1 *6.5*	5.1 *0.2*	68.6 *2.7*	4.4 *9.6*	**MPN 80 B5 - 56 C**
19 × 160	80B5A	**140TC**	22.2 *0.875*	53.8 *2.12*	4.8 *0.188*	24.5 *0.964*	10.9 *0.43*	149.2 *5.875*	114.3 *4.5*	165.1 *6.5*	5.1 *0.2*	68.6 *2.7*	3.4 *7.4*	**MPN 80 B5A - 140 TC**
24 × 200	90B5	**56C**	15.9 *0.625*	52.3 *2.06*	4.8 *0.188*	18.0 *0.709*	10.9 *0.43*	149.2 *5.875*	114.3 *4.5*	165.1 *6.5*	5.1 *0.2*	68.6 *2.7*	4.4 *9.8*	**MPN 90 B5 - 56 C**
19 × 200	90B5R	**140TC**	22.2 *0.875*	53.8 *2.12*	4.8 *0.188*	24.5 *0.964*	10.9 *0.43*	149.2 *5.875*	114.3 *4.5*	165.1 *6.5*	5.1 *0.2*	68.6 *2.7*	4.3 *9.4*	**MPN 90 B5R - 140 TC**
24 × 200	90B5	**140TC**	22.2 *0.875*	53.8 *2.12*	4.8 *0.188*	24.5 *0.964*	10.9 *0.43*	149.2 *5.875*	114.3 *4.5*	165.1 *6.5*	5.1 *0.2*	68.6 *2.7*	4.4 *9.6*	**MPN 90 B5 - 140 TC**
19 × 200	90B5R	**180TC**	28.6 *1.125*	66.5 *2.62*	6.4 *0.25*	31.5 *1.241*	14.2 *0.56*	184.2 *7.25*	215.9 *8.5*	228.6 *9*	5.6 *0.22*	85.1 *3.35*	7.7 *16.9*	**MPN 90 B5R - 180 TC**
24 × 200	90B5	**180TC**	28.6 *1.125*	66.5 *2.62*	6.4 *0.25*	31.5 *1.241*	14.2 *0.56*	184.2 *7.25*	215.9 *8.5*	228.6 *9*	5.6 *0.22*	85.1 *3.35*	7.8 *17.1*	**MPN 90 B5 - 180 TC**
28 × 250	100B5	**180TC**	28.6 *1.125*	66.5 *2.62*	6.4 *0.25*	31.5 *1.241*	14.2 *0.56*	184.2 *7.25*	215.9 *8.5*	228.6 *9*	5.6 *0.22*	85.1 *3.35*	9.3 *20.5*	**MPN 100 B5 - 180 TC**
24 × 200	100B5R	**210TC**	34.9 *1.375*	79.2 *3.12*	7.9 *0.312*	38.6 *1.518*	14.2 *0.56*	184.2 *7.25*	215.9 *8.5*	228.6 *9*	5.6 *0.22*	102.5 *4.04*	9.2 *20.3*	**MPN 100 B5R - 210 TC**
28 × 250	100B5	**210TC**	34.9 *1.375*	79.2 *3.12*	7.9 *0.312*	38.6 *1.518*	14.2 *0.56*	184.2 *7.25*	215.9 *8.5*	228.6 *9*	5.6 *0.22*	102.5 *4.04*	10.8 *23.9*	**MPN 100 B5 - 210 TC**
38 × 300	132B5	**210TC**	34.9 *1.374*	79.2 *3.12*	7.9 *0.311*	38.6 *1.520*	14.5 *0.57*	184.2 *7.25*	215.9 *8.5*	228.6 *9*	5.5 *0.22*	102.5 *4.04*	13.6 *29.98*	**MPN 132 B5 – 210TC**
28 × 250	132B5R	**250TC**	41.3 *1.625*	95.3 *3.75*	9.5 *0.375*	45.6 *1.796*	14.2 *0.56*	184.2 *7.25*	215.9 *8.5*	254.0 *10*	5.6 *0.22*	120.5 *4.74*	13.8 *30.4*	**MPN 132 B5R - 250 TC**
38 × 300	132B5	**250TC**	41.3 *1.626*	95.3 *3.75*	9.5 *0.374*	45.6 *1.795*	14.5 *0.57*	184.2 *7.25*	215.9 *8.5*	254.0 *10*	5.5 *0.22*	120.5 *4.74*	17.2 *37.8*	**MPN 132 B5 – 250TC**
42 × 350	160B5	**250TC**	41.3 *1.626*	95.3 *3.75*	9.5 *0.375*	45.6 *1.795*	14.5 *0.57*	184.2 *7.25*	215.9 *8.5*	254.0 *10*	5.5 *0.22*	120.5 *4.74*	19.9 *43.8*	**MPN 160 B5 – 250TC**
48 × 350	180B5	**280TC**	47.6 *1.874*	111.1 *4.37*	12.7 *0.5*	53.2 *2.094*	14.5 *0.57*	228.6 *9*	266.7 *10.5*	285.8 *11.25*	5.5 *0.22*	139.5 *5.49*	24.5 *54*	**MPN 180 B5 – 280TC**
48 × 350	180B5	**320TC**	54.0 *2.126*	127.0 *5*	12.7 *0.5*	59.7 *2.350*	18.0 *0.71*	279.4 *11*	317.5 *12.5*	355.6 *14*	5.5 *0.22*	155.5 *6.12*	37.8 *83.25*	**MPN 180 B5 – 320TC**
55 × 400	200B5	**320TC**	54.0 *2.126*	127.0 *5*	12.7 *0.5*	59.7 *2.350*	18.0 *0.71*	279.4 *11*	317.5 *12.5*	355.6 *14*	5.5 *0.22*	155.5 *6.12*	42.1 *92.8*	**MPN 200 B5 – 320TC**
60 × 450	225B5	**320TC**	54.0 *2.126*	127.0 *5*	12.7 *0.5*	59.7 *2.350*	18.0 *0.71*	279.4 *11*	317.5 *12.5*	355.6 *14*	5.5 *0.22*	155.5 *6.12*	47.0 *103.6*	**MPN 225 B5 – 320TC**

1) Tolerance 0/+0,025 mm (0/+0,0010 *in*).
2) Tolerance 0/+0,051 mm (0/+0,0020 *in*).
3) Tolerance -0,018/+0,025 mm (-0,0007/+0,0010 *in*).

(39) Solid low speed shaft with inch diameter (sizes 100 ... 360)

Gear reducers and gearmotors sizes 100 ... 360 can be equipped with solid low speed shaft with inch diameter; shaft end can be on opposite to groove side, on groove side or on both (double extension).

For sizes 225, 280 and 360 radial loads (ch.16) are to be multiplied dy 0.4.

For the bore of parts keyed onto shaft end the D tolerance +0.0015 / -0.0000 is suggested (+0.0010 / -0.0000 for size 100) provided that the load is uniform or with moderate overloads and without reversals; otherwise an interference fit should be taken into account; consult us. Before mounting, clean carefully and lubricate mating surfaces against seizure and fretting corrosion.

Installing and removal operations should be carried out with pullers and jacking screws using the tapped hole at the shaft butt-end; for interference fits it is advisable that the part to be keyed is preheated to a temperature of 176 – 212 °F (80 – 100 °C).

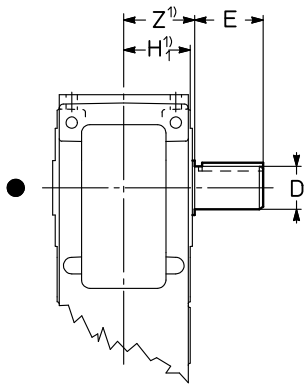

Opposite to groove side

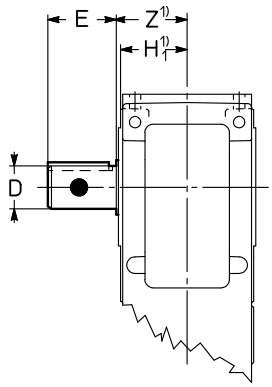

Groove side

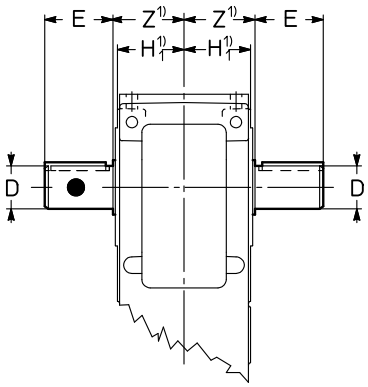

Double extension

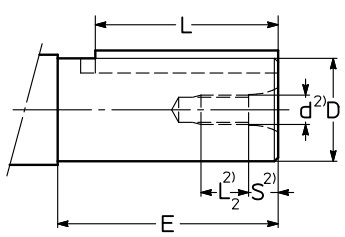

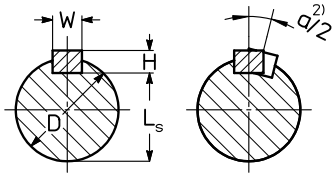

Gear reducer shaft end

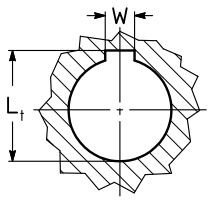

Machine hollow shaft

UTC 2114

Gear reducer size	Shaft end			Key[3]					Keyway[3]		
	D +0.0000 −0.0010		E	W		H		L	W		Ls	Lt
	in		mm	in		in		in	in		in	in
100	**2**	*2*	82	0.5	+0.0000 −0.0020	0.5	+0.0000 −0.0020	2.8125	0.5	+0.0020 −0.0000	1.718	2.223
125	**2.375**	*2 3/8*	105	0.625	+0.0000 −0.0020	0.625	+0.0000 −0.0020	3.625	0.625	+0.0030 −0.0000	2.021	2.651
140	**2.875**	*2 7/8*	105	0.75	+0.0000 −0.0020	0.75	+0.0000 −0.0020	3.625	0.75	+0.0030 −0.0000	2.450	3.205
160	**3.25**	*3 1/4*	130	0.75	+0.0000 −0.0020	0.75	+0.0000 −0.0020	4.5	0.75	+0.0030 −0.0000	2.831	3.586
180	**3.625**	*3 5/8*	130	0.875	+0.0000 −0.0030	0.875	+0.0000 −0.0030	4.375	0.875	+0.0030 −0.0000	3.134	4.014
200	**4.375**	*4 3/8*	165	1	+0.0000 −0.0030	1	+0.0000 −0.0030	5.5	1	+0.0030 −0.0000	3.817	4.822
225	**4.75**	*4 3/4*	165	1.25	+0.0000 −0.0030	1.25	+0.0000 −0.0030	5.375	1.25	+0.0040 −0.0000	4.041	5.296
250	**5**	*5*	200	1.25	+0.0000 −0.0030	1.25	+0.0000 −0.0030	6.75	1.25	+0.0040 −0.0000	4.296	5.551
280	**6.25**	*6 1/4*	200	1.5	+0.0000 −0.0030	1.5	+0.0000 −0.0030	6.75	1.5	+0.0040 −0.0000	5.409	6.914
320, 321	**7.5**	*7 1/2*	240	1.75	+0.0000 −0.0050	1.5	+0.0000 −0.0050	8	1.75	+0.0040 −0.0000	6.646	8.151
360	**8**	*8*	240	2	+0.0000 −0.0050	1.5	+0.0000 −0.0050	8	2	+0.0040 −0.0000	7.123	8.628

- Position of the reference groove (see ch. 8, 10, 12, 14).

1) For Z and H_1 dimension refer to ch. 8, 10, 12, 14.
2) For threaded hole and max key angular misalignment refer to ch. 6 «High and low speed shaft end».
3) According to ANSI B17.1.

Supplementary description when ordering by designation: **solid low speed shaft with inch diameter** followed by **opposite to groove side** or **groove side** or **double extension**.

(40) Hollow low speed shaft with inch diameter (sizes 40 ... 225)

Gear reducers and gearmotors sizes 40 ... 225 can be equipped with hollow low speed shaft with inch diameter; unlike the standard hollow low speed shaft the retaining ring grooves are not present with this design.

«Hollow low speed shaft washer» and «Hollow low speed shaft washer with locking rings or bushing» (ch. (20) and (21)) not available.

Dimensions of machine shaft end on which the gear reducer hollow shaft is to be keyed are those recommended in the table and shown in the figures below.

The suggested machine shaft D tolerance is valid for uniform load or moderate overloads without load reversals; otherwise a different fit should be taken into account; consult us.

Important: the shoulder diameter of the driven machine shaft end abutting with the gear reducer must be at least (1.18 – 1.25) D.

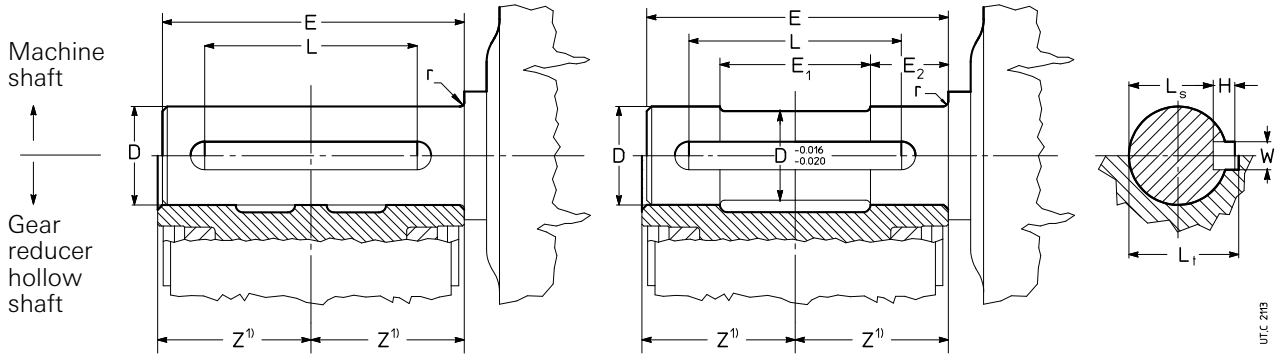

sizes **40 ... 63** sizes **64 ... 225**

Gear reducer size	Hollow shaft D in			Machine shaft D Tolerance in	E in	E_1 in	E_2 in	r in	Key[2] W in		Key[2] H in		Key[2] L in	Keyway[2] W in		Keyway[2] Ls[3] in	Lt in
40	**0.75**	*3/4*	+0.0010 −0.0000	+0.0000 −0.0005	3.56	0.55	2.09	0.06	0.1875	+0.0000 −0.0030	0.125	+0.0000 −0.0030	2	0.1875	+0.0020 −0.0000	0.676	0.806
50	**1**	*1*	+0.0010 −0.0000	+0.0000 −0.0005	4.11	0.83	2.36	0.06	0.25	+0.0000 −0.0030	0.1875	+0.0000 −0.0030	2.5	0.25	+0.0020 −0.0000	0.890	1.083
63	**1.125**	*1 1/8*	+0.0010 −0.0000	+0.0000 −0.0005	4.90	0.77	2.83	0.06	0.25	+0.0000 −0.0030	0.1875	+0.0000 −0.0030	2.5	0.25	+0.0020 −0.0000	1.017	1.210
64	**1.25**	*1 1/4*	+0.0010 −0.0000	+0.0000 −0.0005	4.90	2.24	1.34	0.06	0.25	+0.0000 −0.0030	0.1875	+0.0000 −0.0030	3	0.25	+0.0020 −0.0000	1.144	1.336
80, 81	**1.5**	*1 1/2*	+0.0010 −0.0000	+0.0000 −0.0005	5.85	2.80	1.56	0.06	0.375	+0.0000 −0.0030	0.25	+0.0000 −0.0030	3.5	0.375	+0.0020 −0.0000	1.351	1.606
100	**1.875**	*1 7/8*	+0.0010 −0.0000	+0.0000 −0.0010	7.01	3.43	1.83	0.08	0.5	+0.0000 −0.0030	0.375	+0.0000 −0.0030	4.5	0.5	+0.0020 −0.0000	1.654	2.034
125	**2.375**	*2 3/8*	+0.0015 −0.0000	+0.0000 −0.0010	8.58	4.33	2.17	0.08	0.625	+0.0000 −0.0030	0.4375	+0.0000 −0.0030	5.5	0.625	+0.0030 −0.0000	2.114	2.557
140	**2.75**	*2 3/4*	+0.0015 −0.0000	+0.0000 −0.0010	9.76	4.88	2.48	0.08	0.625	+0.0000 −0.0030	0.4375	+0.0000 −0.0030	7	0.625	+0.0030 −0.0000	2.495	2.938
160	**3.25**	*3 1/4*	+0.0015 −0.0000	+0.0000 −0.0010	10.6	5.35	2.68	0.12	0.75	+0.0000 −0.0030	0.461*	+0.0000 −0.0030	8	0.75	+0.0030 −0.0000	2.956	3.422*
180	**3.625**	*3 5/8*	+0.0015 −0.0000	+0.0000 −0.0010	11.7	5.91	2.95	0.12	0.875	+0.0000 −0.0040	0.586*	+0.0000 −0.0040	8	0.875	+0.0030 −0.0000	3.259	3.850*
200	**4**	*4*	+0.0015 −0.0000	+0.0000 −0.0010	13.0	6.85	3.15	0.12	1	+0.0000 −0.0040	0.671*	+0.0000 −0.0040	10	1	+0.0030 −0.0000	3.561	4.237*
225	**4.25**	*4 1/4*	+0.0015 −0.0000	+0.0000 −0.0010	14.0	7.09	3.54	0.14	1	+0.0000 −0.0040	0.711*	+0.0000 −0.0040	10	1	+0.0030 −0.0000	3.815	4.531*

1) For Z dimension refer to ch. 8, 10, 12, 14.
2) According to ANSI B17.1 except for cases marked with * for which, due to the out-of-standard Lt dimension, a suitable modified key is supplied together with the gear reducer or the gearmotor.
3) Tolerance +0.000/-0.015.

Supplementary description when ordering by designation: **hollow low speed shaft with inch diameter**.

Miscellaneous

– Synchronous multiple drives:
gear reducers and gearmotors with trains of gears ICI sizes 50 ... 100 can be applied for multiple drives together with same size gear reducers, all having the same transmission ratio (see also ch. 10);

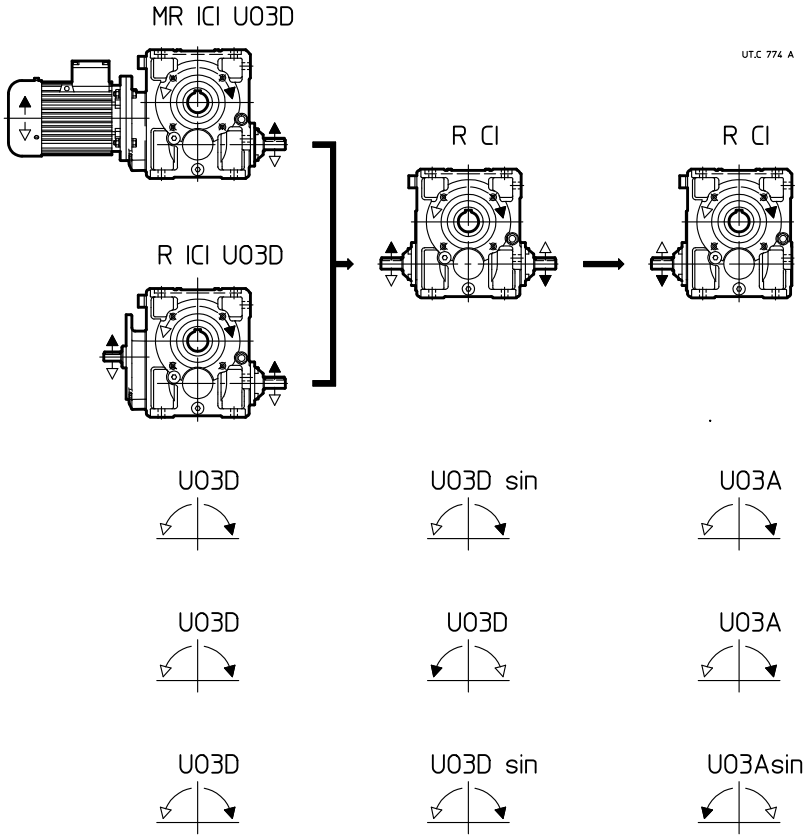

On request, gear reducers R CI can be supplied also for sizes 125 ... 200. In this case, after defining the size and the initial gear reducer or gearmotor transmission ratio ICI, the gear reducers R CI must be selected with this same size and transmission ratio resulting from the one of the initial gear reducer divided by the transmission ratio of the first helical reduction stage; the performance keep the same of initial ICI gear reducer or gearmotor.

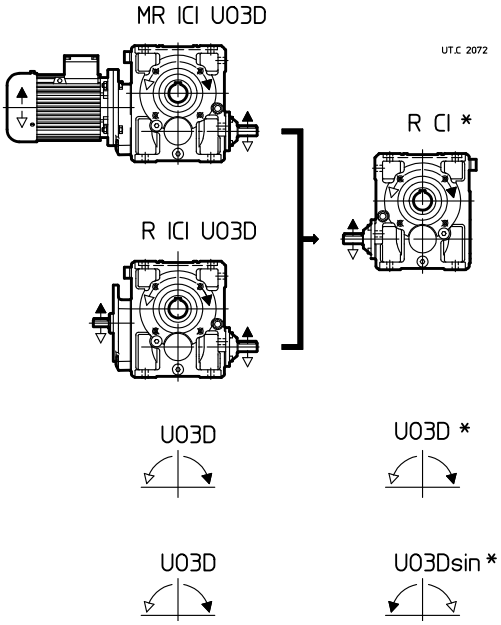

* Gear reducers R ICI ... with design UO3 ... without helical first reduction stage

– Designs (direction of rotation), dimensions and mounting positions of gear reducers R CI 125 ... 200 U03A ... UO3Esin can be deducted from the ones of the similar gear reducers R ICI (see ch. 10).
– If necessary, consult us.

– Gearmotors with:
  – **brake motor** (also single phase) with d.c. **safety and/or parking brake** (sizes 63 ... 132) with overall dimensions almost equal to the ones of standard motor and braking torque $T_{brake} \geqslant T_N$, maximum cost-effectiveness;
  – **two speed motor** (standard, brake, brake with safety and/or parking brake, with flywheel) with 2.4, 2.6, 2.8, 2.12, 4.6, 4.8, 6.8 poles;
  – motor featuring: d.c. supply; single-phase; explosion-proof; with second shaft end; with special protection, voltage and frequency; provided with devices against overloads and overheating;
  – **motor without fan** with external cooling **by natural convection** (sizes 63 ... 112); design usually realized for textile environment;
  – **motor for roller tables** with cooling fins by natural convection, no plastic parts, electromagnetic sizing and specific insulation system for drive with inverter and nominal torque constant on all frequency range;

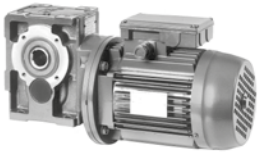

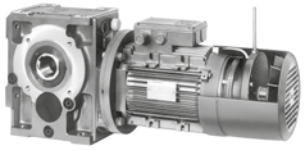

  – Design with **2**ª **motorization** with identical speed (**same** or different direction of rotation) or **reduced** (same direction of rotation, free-wheel coupling) (see picture); for sizes 320 ... 360 the 2nd motorization is realized with bevel helical gearmotor connected with bevel wheel shaft end;

– Housing with B14 flange **on two faces** (train of gears 2I, 3I and 4I sizes 63 ... 125 model 2);
– Input centering (h8) for R CI, R C2I;
– Long model gearmotors sizes **250 ... 360**;
– Gearmotors with interposed compact clutch-brake or fluid coupling/ brake unit;
– Fitting with key, bronze bushing and shrink disc of CI, C2I trains of gears or motor size ⩽ 200;
– Semi-flexible and hydrodynamic couplings;
– Design for MR 2I with **through** low speed shaft;
– **Direct driven pump for forced lubrication of bearings and/or oil cooling by heat exchanger**.

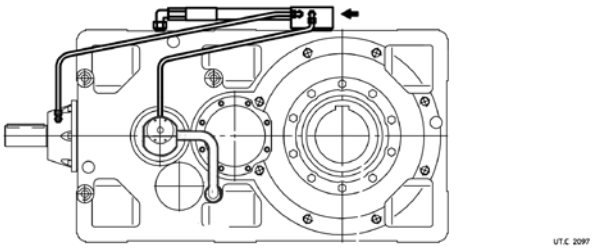

– Gear reducers (excluding R I) and gearmotors with output **mechanical torque limiter** on gear reducer sizes **50 ... 125** (excluding sizes 64, 81).Gear reducer design with mechanical friction type torque limiter (friction surfaces without asbestos), compact, with high transmissible torque – up to **14 160** lb in – and top quality standards.

It protects the drive from accidental overloads by excluding the effect of inertia loads transmitted from up-line masses and (the torque limiter being mounted on the output shaft) inertia loads transmitted from down-line masses.

17 - Accessories and non-standard designs

The system also permits **shaft mounting** with the limiter mounted **externally** (easily accessible), or in the **intermediate** position (better safety protection).

On request slide detector. For more details see **specific literature**.

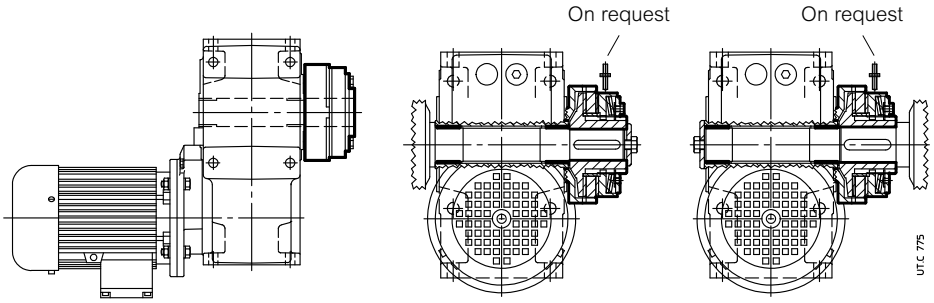

External limiter mounting

Intermediate limiter mounting

– **MLA unit, mechanical torque limiter on input shaft**, motor sizes **80 ... 200**.

Mechanical torque limiter unit to be interposed between gear reducer and B5 mounting position motor standardized to IEC (or wide belt or planetary motor-variator) or, in combined units, between the initial coaxial gear reducer and the final gear reducer sizes **63 ... 280**.

Axially ultra-compact design: excellent load bearing with life lubricated double row angular contact ball bearings (motor size < 112) or «O» disposed taper roller bearings.

The unit protects the drive from accidental overloads by excluding inertia loads transmitted from up-line masses and down-line masses.

Module **MLA unit is friction type** (friction surfaces without asbestos). When the transmitted torque tends to exceed the setting, the drive «slips» although it remains engaged and transmits torque equal to the limiter setting value; slipping stops as soon as the load returns to normal; in the case of very brief overloads the driven machine will continue normal operation (after decelerating or stopping) without requiring reset procedures.

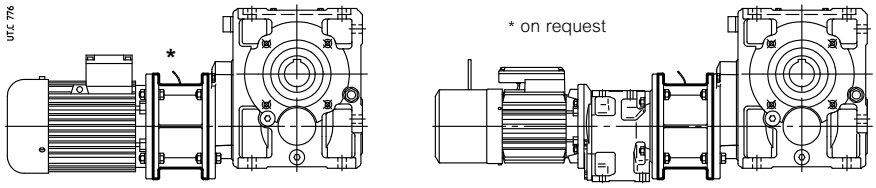

MLA
mounted between gear reducer and motor or motor-variator

MLA
mounted onto combined units

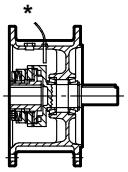

MLA
friction

* on request

Special maintenance-free wearproof mechanical seal for MR 2I, 3I size ⩾ 160, for one direction of rotation only (patented).

Driving group complete of base - motor, coupling, brake if any, second drive for shaft - mounting arrangements (see ch. 32).

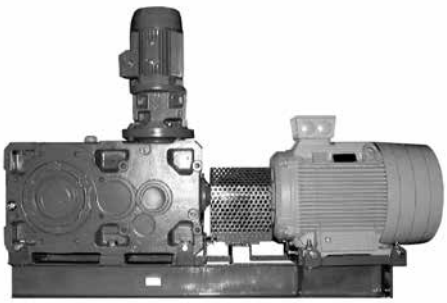

Blank page

18 – Installation and maintenance

Safety....364
Generals....364
Shaft end of driven machine....365
Fitting of components to shaft end....365
Hollow low speed shaft....366
Lubrication....367
Motor assembly and disassembly....368
Shaft mounting arrangements....370
Fastening bolt dimensions for gear reducer feet....374
Tightening torque....374

18. Installation and maintenance

Safety

IMPORTANT: gear reducers and gearmotors supplied by Rossi are **components** to be incorporated into machinery and **should not be commissioned before the machinery in which the components have been incorporated conforms to:**

– Machinery directive 2006/42/EC and subsequent updatings; in particular, possible safety guards for shaft ends not being used for eventually accessible fan cover passages (or other) are the Buyer's responsibility;

– «Electromagnetic compatibility (EMC)» 2004/108/EC and subsequent updatings.

Attention! It is recommended to pay attention to all instructions of present catalog, all standards concerning correct installation and all existing safety laws. Whenever personal injury or property damage may occur, foresee adequate supplementary protection devices against:

– release or breakage of fastening screws;

– rotation or unthreading of the gear reducer from shaft end of driven machine following to accidental breakage of the reaction arrangement;

– accidental breakage of shaft end of driven machine.

If deviations from normal operation occur (temperature increase, unusual noise, etc.) immediately switch off the machine.

Installation

An incorrect installation, an improper use, the removing or disconnection of protection devices, the lack of inspections and maintenance, improper connections may cause severe personal injury or property damage. Therefore the component must be moved, installed, commissioned, handled, controlled, serviced and re-paired **exclusively by responsible qualified personnel specifically instructed** and have the experience necessary to **recognize** and prevent **dangers** connected to present products avoiding all possibile emergencies.

Gear reducers and gearmotors of present handbook are normally suitable for installations in **industrial areas**: **additional protection** measures, if necessary, must be adopted and assured by the personnel responsible for the installation.

Attention! Components in non-standard design or with special executions or with constructive variations may differ in the details from the ones described here following and may require additional information.

Attention! For the installation, use and maintenance of the **electric motor** or of the eventual motor variator and/or electric supply device (frequency converter, soft-start etc.), and/or optional electric devices (e.g.: independent cooling unit, etc.), consult the attached specific documentation. If necessary, require it.

Maintenance

When operating on gear reducer or on components connected to it the **machine** must be **at rest**: disconnect motor (including auxiliary equipments) from power supply, gear reducer from load, be sure that safety systems are on against any accidental starting and, if necessary, pre-arrange mechanical locking devices (to be removed before commissioning).

Attention! During the running the gear reducers could have **hot surfaces**; always wait that the gear reducer or the gearmotor to cool before carrying out any operations.

Please download further technical documentation from our website www.rossi.com.

Generals

Be sure that the structure on which gear reducer or gearmotor is fitted is plane, levelled and sufficiently dimensioned in order to assure fitting stability and vibration absence, keeping in mind all transmitted forces due to the masses, to the torque, to the radial and axial loads.

Position the gear reducer or gearmotor so as to allow a free passage of air for cooling both gear reducer and motor (especially at gear reducer and motor fan sides).

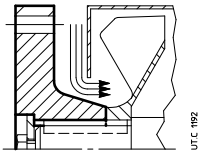

If there is fan on the gear reducer verify that there is sufficient space allowing an adequate circulation of cooling air also after fitting coupling protection. If a coupling protection is fitted, smooth the coupling hub, if necessary.

Avoid: any obstruction to the air-flow; heat sources near the gear reducer that might affect the temperature of cooling-air and of gear reducer for radiation; insufficient air recycle or any other factor hindering the steady dissipation of heat.

Mount the gear reducer so as not to receive vibrations.

When external loads are present use pins or locking blocks, if necessary.

When fitting gear reducer and machine and/or gear reducer and eventual flange **B5** it is recommended to use **locking adhesives** such as LOCTITE on the fastening screws (also on flange mating surfaces).

For outdoor installation or in a hostile environment protect the gear reducer or gearmotor with anticorrosion paint. Added protection may be afforded by water-repellent grease (especially around the rotary seating of seal rings and the accessible zones of shaft end).

Gear reducers and gearmotors should be protected wherever possible, and by whatever appropriate means, from solar radiation and extremes of weather; weather protection **becomes essential** when high or low speed shafts are vertically disposed, or where the motor is installed vertical with fan uppermost.

For ambient temperatures greater than 104 °F (40 °C) or less than 32 °F (0 °C), consult us.

Before wiring-up the gearmotor, make sure that motor voltage corresponds to input voltage. If direction of rotation is not as desired, invert two phases at the terminals.

Star-delta starting should be adopted for starting on no load (or with a very small load) and/or when the necessity is for smooth starts, low starting current and limited stresses.

If overloads are imposed for long periods or if shocks or danger of jamming are envisaged, then motor-protection, electronic torque limiters, fluid couplings, safety couplings, control units or other similar devices should be fitted.

Usually protect the motor with a thermal cut-out; however, where duty cycles involve a high number of on-load starts, it is necessary to utilise thermal probes for motor protection (fitted on the wiring); thermal cut-out is unsuitable since its threshold must be set higher than the motor nominal current of rating.

Connect thermal probes, if any, to auxiliary safety circuits.

Use varistors to limit voltage peaks due to contactors.

Attention! Bearing life, good shaft and coupling running depend on alignment precision between the shafts. Carefully align the gear reducer with the motor and the driven machine (with the aid of shims if need be), interposing flexible couplings whenever possible.

Whenever a leakage of lubricant could cause heavy damages, increase the frequency of inspections and/or envisage appropriate control devices (e.g.: remote oil level gauge, lubricant for food industry, etc.).

In polluting surroundings, take suitable precautions against lubricant contamination through seal rings or other.

Gear reducer or gearmotor should not be put into service before it has been incorporated on a machine which is conform to 2006/42/EC directive.

For brake or special motors, consult us for specific information.

Shaft end of driven machine

Dimensions of shaft end on which the gear reducer hollow shaft is to be keyed are those recommended in the table and shown in the figures below.

Sizes 40, 63: fitting with key (fig. a) or fitting with key and locking rings (fig. b).

Sizes 64 ... 360: fitting with key (fig. c) or fitting with key and locking bushing (fig. d); see also ch. 19 and 20; see also ch. 17.

In the case of cylindrical shaft end with only diameter D (fig. a, c), for the seat D on input side, we recommend tolerance h6, j6 (size < 225) or g6, h6 (size ⩾ 250) to facilitate mounting.

Important: the shoulder diameter of the driven machine shaft end abutting with the gear reducer must be at least (1.18 - 1.25) D.

40 ... 63 **64 ... 360**

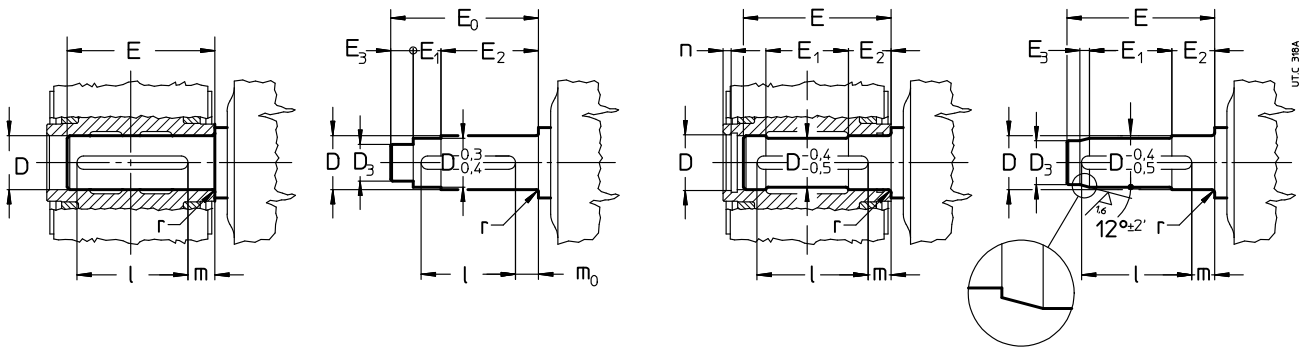

fig. a) fig. b) fig. c) fig. d)

Gear reducer size	D Ø	D_3 Ø H7/h6	E 2)	E_0	E_1	E_2 2)	E_3	l	m	m_0	n	r
	H7/j6. k6											
40	19	15	76.5	81	14	53	14	50	21	14	–	1.5
50	24	19	90.5	95	21	60	14	63	21.5	15	–	1.5
63	30 1)	25	107.5	112.5	19.5	72	21	63	31.5	25	–	1.5
64	32	27	110	–	57	34	10	70	28	–	6	1.5
80	38 1)	32	134	–	71	39.5	12	90	30	–	6	1.5
81	40	34	134	–	71	39.5	12	90	30	–	6	1.5
100	48	41	162	–	87	46.5	14	110	35	–	7	2
125	60	52	201	–	110	55	16	140	40	–	7	2
140	70 1)	62	228	–	124	63	16	180	35	–	8	2
160	80	70	250	–	136	68	21	200	36	–	8	3
180	90	80	274	–	150	75	21	200	50	–	9	3
200	100	88	308	–	174	80	25	250	42	–	10	3
225	110	98	331	–	180	90	25	250	55	–	10	3.5
	H7/h6. j6											
250	125	110	380	–	212	100	32	320	40	–	11	4
280	140	125	410	–	220	112	32	320	60	–	12	4
320. 321	160 1)	140	471	–	258	125	43	400	45	–	13	5
360	180	160	506	–	272	137	43	400	72	–	14	5

1) Keyway depth not to standard (see ch. 6 «Hollow low speed shaft» table, dimension t).

2) In presence of «Labyrinth seal and low speed shaft grease» (ch. 17 (26)), it is necessary to increase the E dimension (E_2) by A quantity stated in the table on ch. 17 (26).

Fitting of components to shaft end

It is recommended that the holes of parts keyed onto shaft ends should be machined to H7 tolerance; for high speed shaft ends having D ⩾ 55 mm, tolerance G7 is permissible provided that the load is uniform and light; for low speed shaft end, tolerance must be K7 if load is not uniform and light. Other data according to table «High and low speed shaft end» (ch. 6). Before mounting, clean carefully and lubricate mating surfaces against seizure and fretting corrosion.

Installing and removal operations should be carried out with **pullers** and **jacking screws** using the tapped hole at the shaft butt-end; for H7/m6 and K7/j6 fits it is advisable that the part to be keyed is preheated to a temperature of 176 - 212 °F (80 - 100 °C).

Hollow low speed shaft

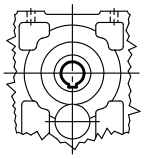

In order to remove the hollow low speed shaft (this is the first operation to perform when disassembling the gear reducer) turn the shaft until the keyway is facing the intermediate shaft, as shown in the drawing alongside, and push the shaft from the reference groove side (see ch. 6).

For the shaft end of machines where the gear reducer stepped hollow shaft is to be keyed, h6, j6 or k6 tolerances are recommended according to requirements. Other details are given under «High and low speed shaft end (ch. 6)» and «Shaft end of driven machine» (ch. 18).

In order to have an easier **installing and removing** of gear reducers sizes 64 ... 360 with retaining ring groove proceed as per the drawings a, b, respectively (excluding MR 3I 100 with motor size 112 and 3I 125 with motor size 132; consult us).

For MR 3I 64 ... 81 first insert the washer with screw and the retaining ring into gear reducer hollow shaft (on motor opposite side); then mount on machine shaft end.

For the axial fastening it is possible to adopt the system as per fig. c, d. For sizes 64 ... 360, when shaft end of driven machine has no shoulder, a spacer may be located between the retaining ring and the shaft end itself (as in the lower half of the fig. d).

The use of **locking rings** (sizes 40 ... 63, fig. e), or of **locking bushing** (sizes 64 ... 360, fig. f) will permit easier and more accurate installing and removing and to eliminate backlash between key and keyway, friction system **complying** with Atex.

The locking rings or the locking bushing should be inserted after mounting (for MR 3I 64 ... 81 insert the bushing onto machine shaft end or into hollow shaft before mounting; pay attention when positioning the keyway); the shaft end of driven machine must be as prescribed at the previous page (or at ch. 17(6)) with stepped hollow low speed shaft or with shrink disc). Do not use molybdenum disulphide or equivalent lubricant for the lubrication of the parts in contact. **When tightening the bolt**, we recommend the use of a **locking adhesive** LOCTITE 601. For **vertical ceiling-type** mounting consult us.

In case of axial fastening with locking rings or bushing – especially when having heavy duty cycles, with frequent reversals – verify, after some hours of running, the bolt tightening torque and eventually apply the locking adhesive again.

A **washer** for gear reducer installing, removing (excluding sizes 40 ... 63) and gear reducer axial fastening with or without **locking rings or bushing** (dimensions stated in table) and hollow low speed shaft **protection cap** can be supplied on request. Parts in contact with retaining ring, if any, must have sharp edges.

Whenever personal injury or property damage may occur, **foresee adequate supplementary protection devices** against:

– rotation or unthreading of the gear reducer from shaft end of driven machine following to accidental breakage of the reaction arrangement;

– accidental breakage of shaft end of driven machine.

Size	63	64	80	81	100	125	140	160
s_{max}	2	3	6	6	7	9	9	11

For sizes 63 ... 160, the hollow low speed shaft protection cap must be keyed into seal ring seat that, for this reason, must be pushed towards gear reducer inside for the maximum depth stated in the table.

For this operation use the protection cap as a tool, hammering it carefully along the periphery (see fig. above). **For ATEX design gear reducers, this accessory is not available.**

Installing a) and removing b)

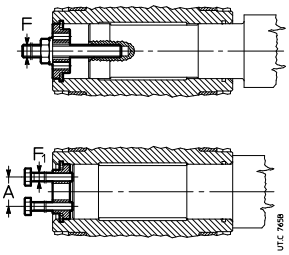

Axial fastening

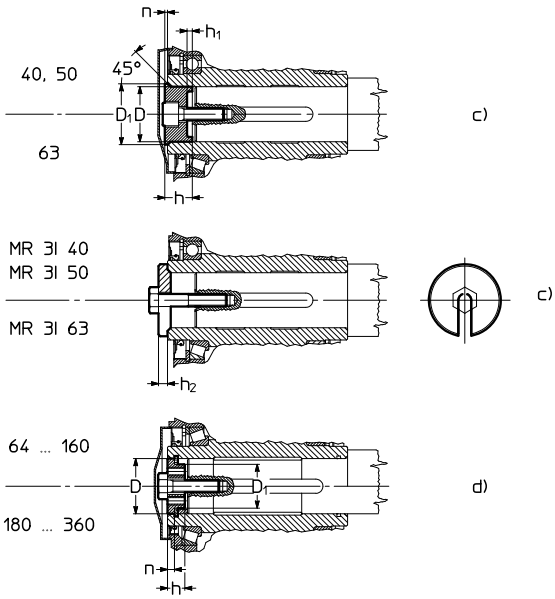

Fitting with key and locking rings e), with key and locking bushing f).

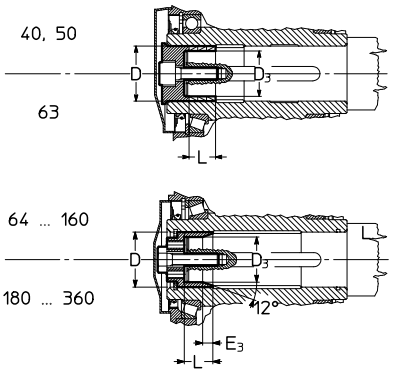

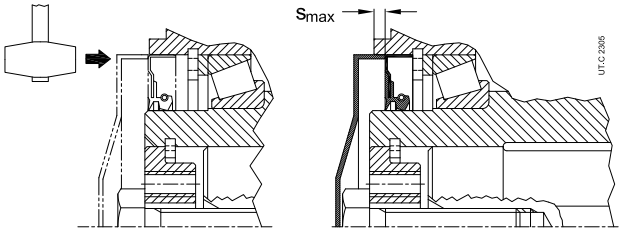

Size	A	D Ø	D_1 Ø	D_3 Ø	E_3 ≈	F	F_1	h	h_1	h_2	L	n	Axial fastening bolt UNI 5737-88	Axial fastening bolt *Ts*[1] lb in
40	–	19	22.5	15[4]	–	M8	–	14.8	2.8	4	12.6[4]	1.1	M8×25[2]	255
50	–	24	27.5	19[4]	–	M8	–	14.8	2.8	4	12.6[4]	1.2	M8×25[2]	310
63	–	30	34	25[4]	–	M10	–	18.5	3.7	5	18.9[4]	1.4	M10×30[2]	380
64	18	32	23	27	9	M10	M6[5]	10	–	–	19	6	M10×35	380
80	18	38	27	32	11	M10	M6[5]	12	–	–	23	6	M10×35[3]	450
81	18	40	28	34	11	M10	M6	12	–	–	23	6	M10×35[3]	470
100	23	48	35	41	13	M12	M8	14	–	–	28	7	M12×45[3]	815
125	30	60	45	52	15	M14	M12	16	–	–	35	7	M14×45[3]	1 500
140	36	70	54	62	15	M16	M12	19	–	–	40	8	M16×50	1 860
160	45	80	63	70	20	M20	M12	19	–	–	45	8	M20×60	3 010
180	49	90	72	80	20	M20	M16	23	–	–	49	9	M20×60[3]	3 810
200	56	100	81	88	24	M24	M16	23	–	–	52	10	M24×70	5 840
225	64	110	89	98	24	M24	M16	24	–	–	60	10	M24×70[3]	7 350
250	72	125	102.5	110	30	M30	M20	28	–	–	67	11	M30×90	11 950
280	87	140	117	125	30	M30	M20	30	–	–	76	12	M30×90[3]	14 700
320, 321	97	160	133.5	140	41	M36	M24	33	–	–	86	13	M36×110	22 750
360	117	180	153	160	41	M36	M24	36	–	–	95	14	M36×110[3]	27 900

1) Tightening torque for locking rings or bushing.
2) UNI 5931-84. For MR 3I: M 8 × 35 and M 10 × 40 UNI 5737-88.
3) For locking bushing: M 10 × 35, M 12 × 45, M 14 × 45, class 10.9; M 20 × 65, M 24 × 80 and M 30 × 100 UNI 5737-88 class 10.9; M 36 × 120 UNI 5931-84 class 10.9.
4) Locking bushing is not possible for MR 3I.
5) It cannot be used for the disassembly of MR 3I.

Lubrication

Gear pairs are oil-bath lubricated with the exception of the first reduction stage in helical gear reducers train of gears **3I** and the first two reduction stages of gearmotors **4I** sizes ⩽ 125 in V5 mounting position, which are lubricated «for life» with grease (SHELL Gadus S5). Bearings are either oil-bathed or splashed with the exception of the top bearings which are lubricated with a pump (see ch. 17(19)) or lubricated «**for life**» with grease (with or without NILOS ring according to speed).

Sizes 40 ... 81

The gear reducers are supplied **filled with synthetic oil** (KLÜBER Klübersynth GH 6-220, MOBIL Glygoyle 220, SHELL Omala S4 WE 220), providing lubrication – assuming pollution-free surroundings – «**for life**». Ambient temperature 32 - 104 °F (0 ÷ 40 °C) with peaks up to -4 °F (-20 °C) and +122 °F (+50 °C).

Important: verify mounting position keeping in mind that if gear reducer is installed in a mounting position differing from the one stated on name plate, it could need the addition – through the proper hole – of the difference between the two lubricant quantities as shown in ch. 8, 10, 12 and 14.

Sizes 100 ... 360

The gear reducers are supplied **without oil**; before putting into service, fill to the specified level[1], with **mineral oil** with **EP** (extreme pressure) **additives**, having the ISO viscosity grade given in the table. Under normal conditions the first speed range is for train of gears **I**, the second is for trains of gears **2I** and **CI**, the third is for trains of gears **3I**, **4I**, **C2I**, **ICI** and **C3I**, while the fourth is for **combined units**.

When it is required to increase oil change interval («long life»), the ambient temperature range and/or reduce oil temperature, use PAO polyalphaolefine based **synthetic oil** with **EP** (extreme pressure) **additives**, having ISO viscosity grade as indicated in the table.

1) Lubricant quantities stated on ch. 8, 10, 12, 14 are approximate for provisioning. The exact oil quantity the gear reducer is to be filled with is definitely given by the level.

ISO viscosity grade
Mean kinematic viscosity [cSt] at 104 °F (40 °C).

Speed n_2 min^{-1}	Ambient temperature[1] [°C] mineral oil 32 - 68 °F (0 - 20 °C)	mineral oil 50 - 104 °F (10 - 40 °C)	synthetic oil 32 - 104 °F (0 - 40 °C)
> **224**	150	150	150
224 ÷ 22.4	150	220	220
22.4 ÷ 5.6	220	320	320
< **5.6**	320	460	460

1) Peaks of 18 °F (10 °C); 36 °F (20 °C) for synthetic oil, below and 18 °F (10 °C) above the ambient temperature range are acceptable.

Oil types

Manufacturer	PAO synthetic oil ISO VG 150 ... 460	mineral oil ISO VG 150 ... 460
AGIP	Blasia SX	Blasia
ARAL	Degol PAS	Degol BG
BP	Enersyn EPX	Energol GR XP
CASTROL	Alphasyn EP	Alpha SP
FUCHS	Renolin Unisys CLP	Renolin CLP
KLÜBER	Klübersynth GEM4	Klüberoil GEM1
MOBIL	Mobil SHC Gear	Mobilgear 600 XP
SHELL	Omala S4 GX / S4 GXV	Omala S2 G / S2 GV
CHEVRON	Pinnacle	Meropa
TOTAL	Carter SH	Carter EP

For continuous duty, the use of synthetic oil is recommended in the following cases:
– R ICI, MR C3I 100, 125 and MR ICI 100 ... 200 mounting position B6;
– R I 100 with n_2 ⩾ 375 rpm;
– R CI 100 with n_2 ⩾ 150 rpm;
– R 2I and MR 2I 125 with i_N ⩽ 12.5, mounting position B7, n_1 ⩾ 950 rpm;
– MR ICI 200, motor size 225;

– gear reducers and gearmotors with size and mounting position marked with ⚘ (see ch. 8, 10, 12, 14) and bevel helical gear reducers with double extension high speed shaft.

An overall guide to oil-change interval[2] is given in the table, and assumes pollution-free surroundings. When heavy overloads are present, halve the values.

Oil temperature °F	Oil temperature °C	Oil change interval [h] mineral oil	Oil change interval [h] synthetic oil
≤ 149	≤ 65	8 000	25 000
149 ÷ 176	65 ÷ 80	4 000	18 000
176 ÷ 203	80 ÷ 95	2 000	12 500
203 ÷ 230[1]	95 ÷ 110[1]	—	9 000

1) Values admissible for not continuous duty, only.
2) Values not valid for gear reducers according to ATEX directive; for values see ATEX instructions.

Apart from the running hours:
– replace the mineral oil at least each 3 years;
– replace or regenerate the synthetic oil at least each 5 - 8 years, according to gear reducer size, running and environmental conditions.

Never mix different makes of synthetic oil; if oil-change involves switching to a type different from that used previously, then give the gear reducer a thorough clean-out.

Combined gearmotor units

Lubrication remains independent, thus data relative to each single gear reducer hold good.

Seal rings

Duration depends on several factors such as dragging speed, temperature, ambient conditions, etc.; as a rough guide it can vary from 3150 to 25000 h.

Filler plug

For gear reducer sizes 100 ... 360, before unscrewing the filler plug with valve (symbol ⊸) wait until the unit has cooled and then open with caution.

Motor assembly and disassembly

Gearmotors with motor keyed onto hollow high speed shaft of gear reducer

Helical gearmotors MR 2I, MR 3I 140 ... 360
Bevel helical gearmotors MR CI, MR C2I

– be sure that the mating surfaces are machined under accuracy rating (IEC 60072-1);
– clean surfaces to be fitted thoroughly;
– check that the fit-tolerance (push-fit) between hole and shaft end is G7/j6 for D ≤ 28 mm, F7/k6 for D ≥ 38 mm;
– lubricate surfaces to be fitted against fretting corrosion;
– in the event of a lowered keyway, replace the motor key with the one supplied with the gear reducer; if necessary, check the key so that between its top and the bottom of the hole keyway there is a backlash of 0,1 - 0,2 mm; in case of output shaft keyway, lock the key by pins;

In presence of **hub clamp** (helical gearmotors 2I, 3I with motor sizes ≥ 200) proceed as follows, for the mounting:
– Turn the hub clamp until the fastening screw head is aligned with one of the access holes on gear reducers flange, after having removed the relevant closure plugs;
– do not modify the axial position of the hub clamp supplied from workshop, as this position is the excellent one in order to achieve the maximum tightening effect;
– push the motor up to shoulder;
– tighten the motor fastening screws or nuts to gear reducer motor flange;
– complete the tightening with dynamometric wrench up to the tightening torque stated in the table; during this operation pay attention not to modify the axial position of hub clamp;
– screw again the closure plugs of access holes to gear reducer flange;

Gear reducer size 2I	Gear reducer size 3I	Screw UNI 5931	*T*s lb in
160 ... 225	**200 ... 280**	M12× 45 cl. 12.9	1 270
250... 360	**320 ... 360**	M12× 45 cl. 12.9 Ød ≤ 75 M14× 50 cl. 8.8 Ød = 80	1 270 1 190

For the disassembly, proceed as follows:
– acting on motor shaft rear end, whenever possible, or disconnecting the gear reducer from machine and acting on gear reducer low speed shaft (with brake motor the brake must be released), align the wrench hole with the tightening screw of hub clamp;
– loosen the tightening screw and consequently the hub clamp (taking care not to modify the axial position of hub clamp);
– unscrew the motor fastening screws of nuts to gear reducer flange;
– disassemble the motor.

Gearmotors with helical pinion keyed directly on motor shaft end

Helical gearmotors MR 3I 40 ... 125, MR 4I
Bevel helical gearmotors MR ICI, MR C3I
Coaxial gearmotors, coupled with helical and bevel helical gear reducers (combined units).

– be sure that the mating surfaces are machined under accuracy rating (IEC 60072-1);
– clean surfaces to be fitted thoroughly;
– check that the fit-tolerance (push-fit) between hole and shaft end is K6/j6 for D ⩽ 28 mm, J6/k6 for D ⩾ 38 mm;

– in the event of a lowered keyway, replace the motor keyway with the one supplied with the gear reducer; adjust the keyway length to the motor shaft, if need be; check that between the top and the bottom of the hole keyway there is a backlash of 0.1 - 0.2 mm; in the event of output shaft keyway, lock the key by pins.
– make sure that the motors have bearing location and overhang (distance S) as shown in the table;

Motor size	Min dynamic load capacity lb		Max dimension 'S' in
	Front	Rear	
63	1000	750	0.63
71	1400	1060	0.71
80	2000	1500	0.79
90	3000	2240	0.89
100	4500	3350	0.98
112	5600	4250	1.1
132	8000	6000	1.32
160	10600	7500	1.48
180	14000	10000	1.57
200	18000	12500	1.77
225	22400	16000	1.87

– assemble on motor shaft, as follows:
– the **spacer** pre-heated at **149 °F** (65 °C) sealing the motor shaft part with **locking adhesive type LOXEAL 58-14** and ensuring that between keyway and motor shaft shoulder there is a ground cylindrical section of at least 1,5 mm; pay attention **not to damage the external surface** of spacer;
– the **key** in the keyway, taking care that a brief segment of at least 0,9 times the pinion width;
– the pinion pre-heated at **176 - 212 °F** (**80 – 100 °C**);
– the **axial fastening system** where foreseen (head self-locking screw with base, spacer, or hub clamp with one or more dowels, fig. a); for the cases foreseen **without axial fastening** (fig. b), seal with **locking adhesive type LOXEAL 58-14** also the motor shaft section below the **pinion**;
– in the event of axial fastening system with hub clamp and dowels, be sure that these ones do not overhang from spacer external surface: screw the dowel and matrix the motor shaft with a tip;
– grease the pinion teeth, the sealing ring rotary seat and the seal ring (with KLÜBER Petamo GHY 133N), and assemble carefully, **paying attention not to damage the seal ring lip due to accidental shock with the pinion toothing.**

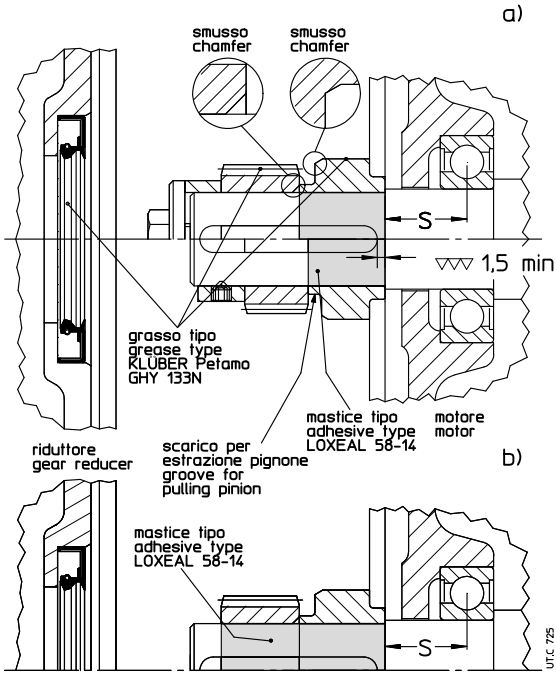

Shaft mounting arrangements

The strength and shape of the housing offer advantageous possibilities for shaft mounting (for several reaction arrangements which can be supplied, see ch. 17 «Shaft mounting arrangements»), even - for instance - gearmotor with belt drive, with hydraulic coupling, low speed shaft support, etc.

A few shaft mounting arrangements are shown here with the relative details as to selection, and installation.

IMPORTANT: When shaft mounted, the gearmotor must be supported both axially and radially (even for mounting positions B3 ... B8) by the shaft end of driven machine, as well as anchored against rotation only, by means of a reaction having **freedom of axial movement** and sufficient clearance in its couplings to permit minor oscillations - always in evidence - without provoking dangerous overloads on the gearmotor. Lubricate with proper products the hinges and the parts subject to sliding; when tightening the screws it is recommended to apply locking adhesives type LOCTITE 601.

In case of shaft-mounting arrangement with elastic constraint, for the sizes 140 ... 360 C2I, 2I, 3I in B3 or B8 mounting position, ensure that the housing oscillation, during the running, not overtake - towards the top - the horizontal position.

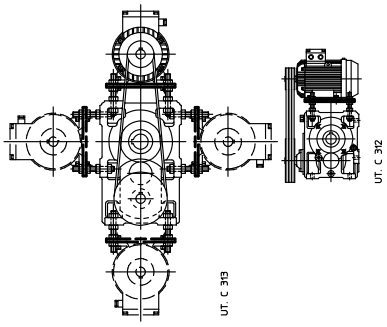

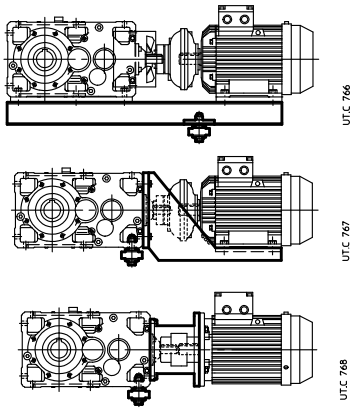

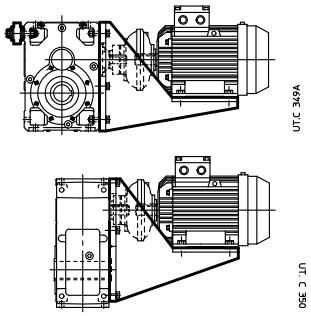

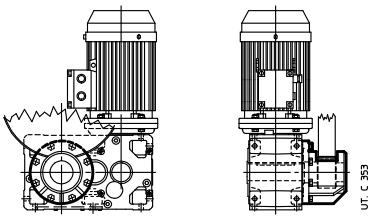

Semi-flexible and economic reaction arrangement for 2I, 3I, 4I sizes ⩽ 125 (ch. 17) using **reaction recess and disc springs**.

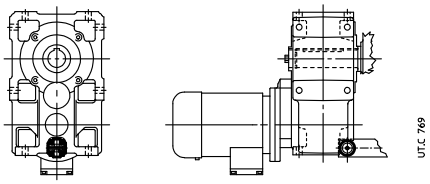

Semi-flexible and economic reaction arrangement for sizes ⩽ 125 (ch. 17), with **bolt using disc springs**, suitable for low torque values.

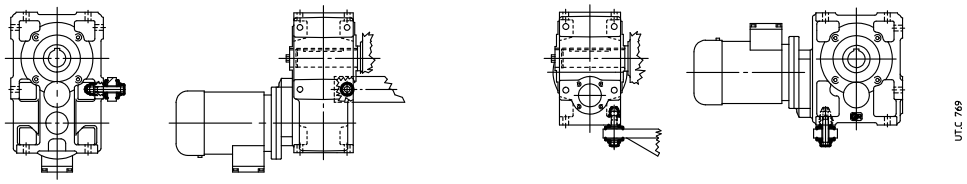

Semi-flexible and economic **reaction arrangement** for sizes ⩾ 140 (⩾ 125 for CI; ch. 17), **using disc springs**. Safety devices may be installed to prevent accidental overloads.

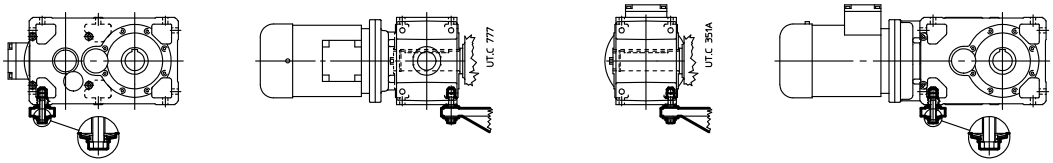

18. Installation and maintenance

Semi-flexible reaction arrangement (ch. 17), **using disc springs and bracket**.

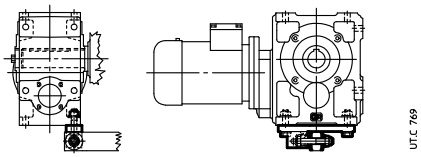

Rigid torque arm reaction arrangement for variable distance anchorage (ch. 17).
If the direction of rotation is opposite to that given in the fig. rotate the torque arm by 180°.

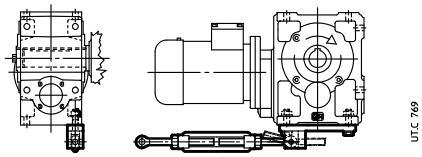

Reaction arrangement see above (ch. 17), but **flexible**; safety devices may be installed to prevent accidental overloads
The flexible torque arm may be turned through 180° regardless of direction of rotation.

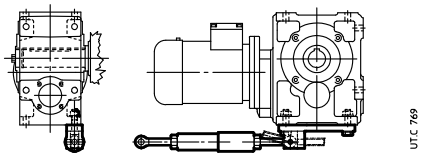

Flexible reaction arrangement using **rubber buffers** (drawings are approximate, but the buffers will be positioned abutting with gear reducer housing). It is possible to install safety devices against accidental overloads.

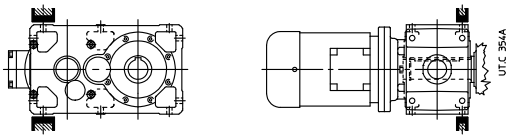

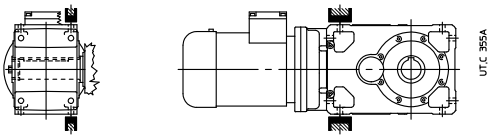

18. Installation and maintenance

For the majority of normal cases, where weight force G is parallel or orthogonal to reaction R_R as illustrated in the drawings, reactions are calculated thus (verify the worst condition) valid for long model too:

Helical gear units

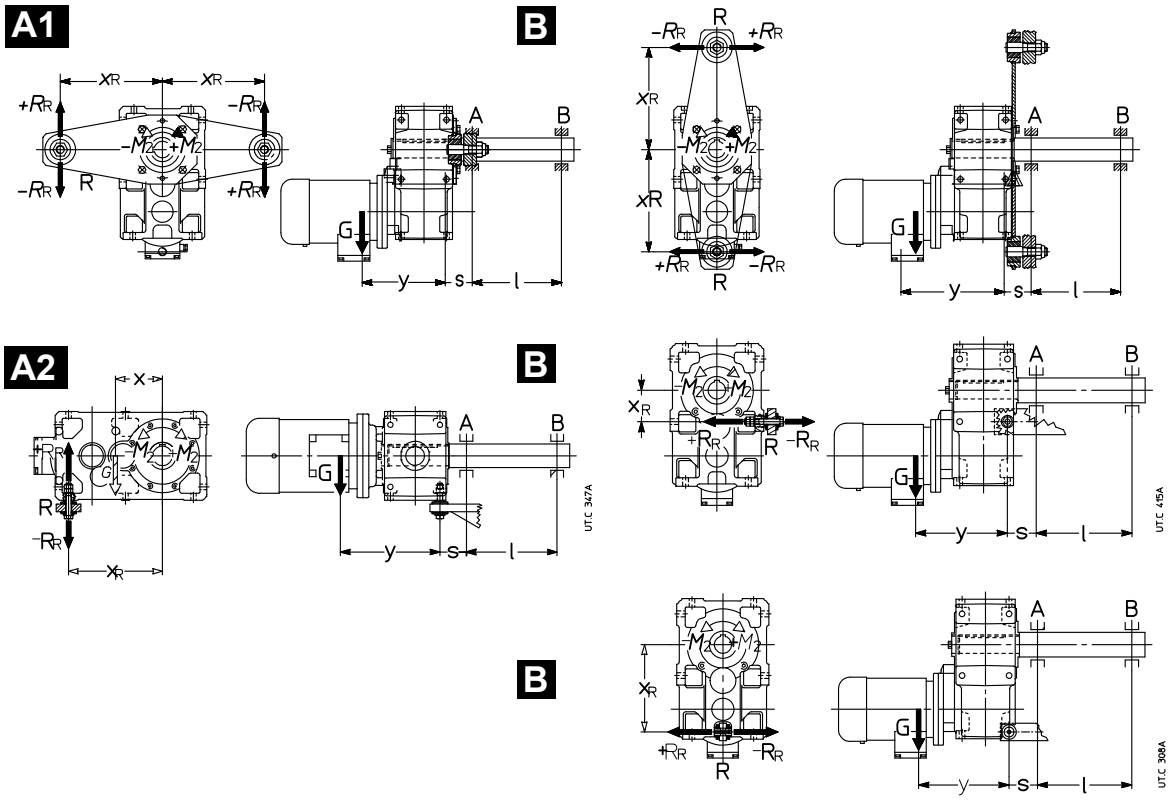

Bevel helical gear units

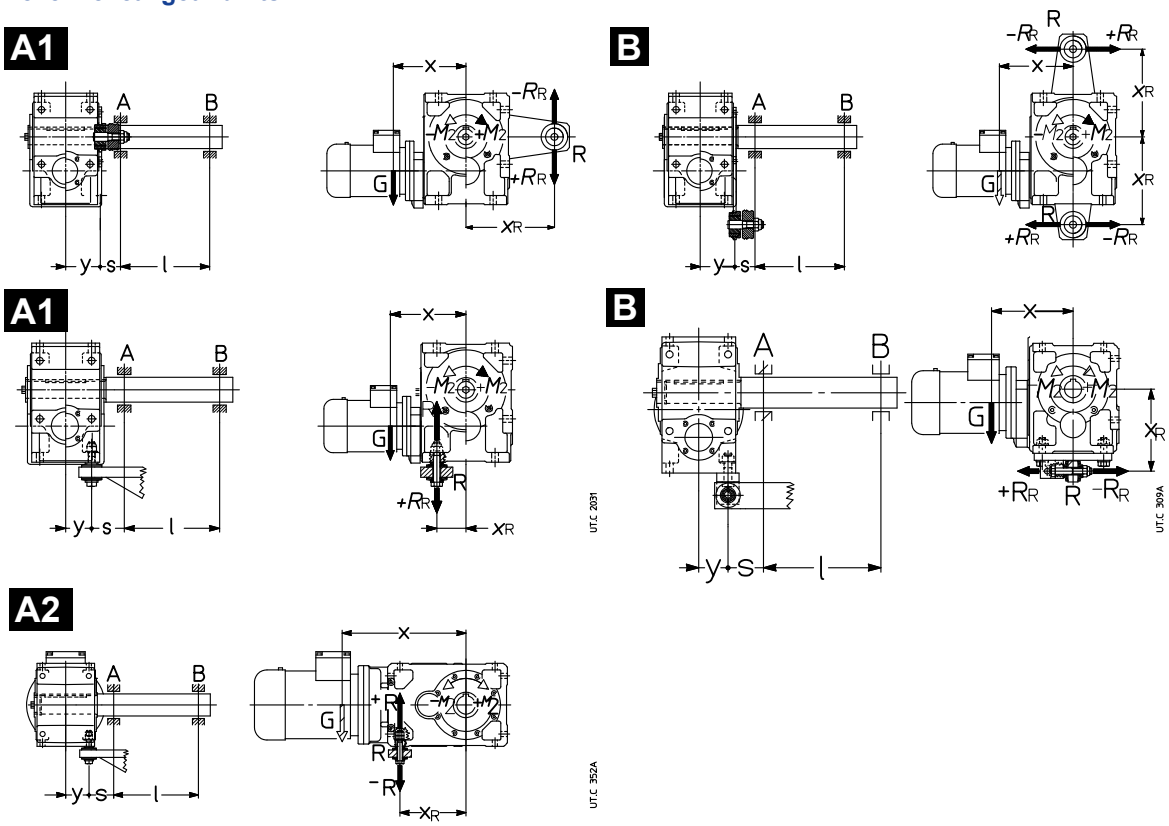

– G [lb]: weight force almost equal numerically to gearmotor mass (ch. 12 and 14) · 10;

– T_2 [lb in]: output torque expressed by + or – according to the direction of rotation in the drawing;

– x [in]: for helical gearmotors dimension x = 0 (scheme A1 and B) or x = 0,67 · a (scheme A2) (ch. 12); for bevel helical gearmotors dimension x = G + 0,2 · Y (schemes A1 and B) or x = a + G + 0,2 · Y (scheme A2) (ch. 14);

– y [in]: for helical gearmotors dimension y = 0,5 · B + G + 0,2 · Y (ch. 12); for bevel helical gearmotors dimension y = 0,5 · B (ch. 14);

– x_R [in]: see ch. 12, 14, 17;

– l, s [in]: dimension s must be as short as possible.

1) reaction R_R produced by support R:

$$R_R = (1 / x_R) \cdot [G \cdot x + (\pm T_2)] \quad [\text{lb}]$$

2) bending moment T_{fA} through the cross-section of bearing A:

A1 **A2** $T_{fA} = [G \cdot (y + s)] - [(\pm R_R) \cdot s]$ [lb in]

B $T_{fA} = \sqrt{[G \cdot (y + s)]^2 + [R_R \cdot s]}$ [lb in]

3) radial reaction R_A produced by bearing A:

A1 **A2** $R_A = \frac{1}{l} \{[G \cdot (y + s + l)] - [(\pm R_R) \cdot (s + l)]\}$ [lb]

B $R_A = \frac{1}{l} \sqrt[2]{[G \cdot (y + s + l)]^2 + [R_R \cdot (s + l)]}$ [lb]

4) radial reaction R_B produced by bearing B:

$$R_B = \frac{T_{fA}}{l} \quad [\text{lb}]$$

Fastening bolt dimensions for gear reducer feet

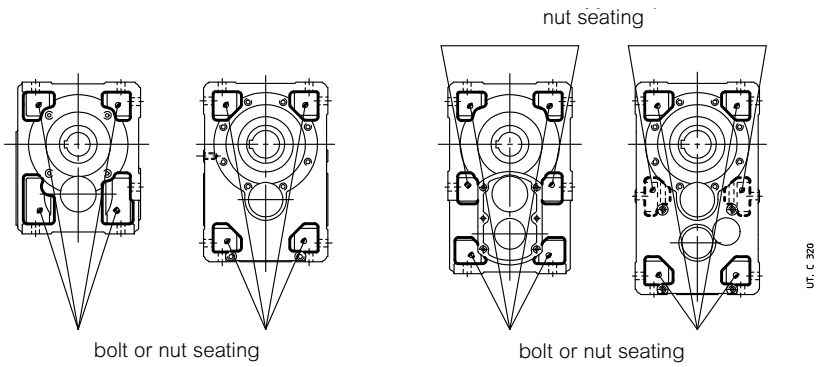

Gear reducer size	Bolt DIN 931 *ANSI B18.2.1* (l max)
40	M 6 × 22 *1/4" - 20 x 7/8"*
50	M 8 × 30 *5/16" - 18 x 1"1/8*
63, 64	M 10 × 35 *3/8" - 16 x 1"3/8*
80, 81	M 12 × 40 *1/2" - 13 x 1"1/2*
100	M 14 × 50 *1/2" - 13 x 2"*
125, 140	M 16 × 55 *5/8" - 11 x 2"*
160, 180	M 20 × 70 *3/4" - 10 x 2"3/4*
200, 225	M 24 × 90 *1" - 8 x 3"1/2*
250, 280	M 30 × 110 *1"1/4 - 7 x 4"1/4*
320 ... 360	M 36 × 130 *1"1/2 - 6 x 5"*

Tightening torque

Unless otherwise stated, usually it is sufficient to use bolts in class 8.8.

- Before tightening the bolt be sure that the eventual centering of flanges are inserted properly
- The bolts are to be diagonally tightened with the maximum tightening torque.

Before tightening, carefully degrease the bolts; for strong vibrations, heavy duties, frequent motion reversals, apply a thread-braking seal Loxeal 23-18 or equivalent.

Table of tightening torque for axial fastening bolts (locking rings or bushing) and shrink disc[1)]

Gear reducer size	**40**	**50**	**63**	**64**	**80**	**81**	**100**	**125**	**140**	**160**	**180**	**200**	**225**	**250**	**280**	**320, 321**	**360**
Axial fastening bolts UNI 5737-88 cl. 8.8	M8[2)]	M8[2)]	M10[2)]	M10	M10[3)]	M10[3)]	M12[3)]	M14[3)]	M16	M20	M20[3)]	M24	M24[3)]	M30	M30[3)]	M36	M36[4)]
Ts [lb in] for rings or bushing	29	35	43	43	51	53	92	170	210	340	430	660	830	1350	1660	2570	3150
Shrink disc bolts UNI 5737-88 class 10.9	M5	M5	M6	M6	M6	M6	M8	M8	M8	M10	M10	M12	M12	M16	M16	M16	M16
Ts [lb in] for shrink disc	4	4	12	12	12	12	30	30	30	60	60	100	100	250	250	250	250

1) The bolts of shrink disc must be gradually and uniformly tightened, with continuous sequence (not diagonally!) and in several phases up to the reaching of maximum tightening torque stated on table.
2) UNI 5931-84 cl. 8.8 (excluding MR 3I).
3) UNI 5737-88 cl. 10.9.
4) UNI 5931-84 cl. 10.9.

Table of tightening torque for fastening bolts (feet, flange)

Screw	*Ts* [lb in] DIN 931, DIN 912			Screw	T_S [lb in] ANSI B18.2.1, ANSI B18.3		
	cl. 8.8	cl. 10.9	cl. 12.9		Grade 5	Grade 8	FNL Grade 9
M4	26	35	-	-	-	-	-
M5	53	75	89	-	-	-	-
M6	97	135	175	***1/4" - 20***	76	107	126
M8	220	310	355	***5/16" - 18***	157	221	259
	[lb ft]				[lb ft]		
M10	37	51	63	***3/8" - 16***	23	33	38
M12	62	88	106	***1/2" - 13***	57	80	94
M14	99	140	170		57	80	94
M16	150	214	258	***5/8" - 11***	113	159	186
M18	206	295	354	***3/4" - 10***	200	282	331
M20	295	413	500		200	282	331
M22	405	568	685	***7/8" - 9***	322	455	533
M24	523	738	883	***1" - 8***	483	681	799
M27	738	1033	1254	***1"1/8 - 7***	596	966	1087
M30	1016	1437	1733	***1"1/4 - 7***	840	1363	1597
M33	1475	2066	2508	***1"3/8 - 6***	1102	1768	2094
M36	1845	2616	3096	***1"1/2 - 6***	1462	2371	2779

Table of tightening torque for plugs

Gear reducer size	Thread dimension	*Ms* [N m]
40, 50	G 1/4"	62
63 ... 81	M16 x 1,5	125
100 ... 140	G 1/2"	125
160 ... 280	G 3/4"	125
320 ... 360	G 1"	220

G series 400 - 401

Section contents

19 – General specifications sizes 400 - 401 376

20 – Designation 379

21 – Service factor *f*s 383

22 – Thermal power *P*t [hp] 387

23 – Selection 391

24 – Structural and operational details 395

25 – Helical gear reducer selection tables 401

26 – Dimensions, designs, mounting positions of helical gear reducers 403

27 – Bevel helical gear reducer selection tables 411

28 – Dimensions, designs, mounting positions of bevel helical gear reducers 413

29 – Radial loads 419

30 – Accessories and non-standard designs 427

31 – Installation and maintenance 451

Universal mounting: suitable for horizontal or vertical mounting
Rigid and precise single-piece nodular cast iron housing; high oil capacity
Hollow low speed shaft as standard
Pre-arranged for motor bell housing
Pre-arranged for backstop device
Double extension high speed shaft
Single or double extension solid low speed shaft, hollow shaft with shrink disc,
Two sizes: standard (400) and strengthened (401)

Main structural features

Main specifications are:

- **universal mounting** with integral **feet** to housing on 4 faces and with **B14 flange** on 2 faces; design and strength of the housing permit interesting shaft mounting solutions, foot mounted motor (s. ch. 31) and mounting for auxiliary devices;
- gear reducer overall sized so as to permit the transmission of **high nominal and maximum torques,** and to withstand **high loads on** the high and low speed **shaft ends**;
- standard **hollow low speed shaft** in steel with keyway and retaining ring grooves for extraction; standard low speed shaft (overhanging right or left) or double extension low speed shaft (s. ch. 30);
- cylindrical high speed shaft end with key;
- **possibility of second high speed shaft extension (excluding C3I);**
- improved and upgraded modular construction both for component parts and assembled product;
- standardized dimensions and compliance with standards;
- **nodular cast iron single-piece** housing (400-15 UNI ISO 1083); stiffening ribs and high oil capacity;
- bearings: swinging roller bearings on low and intermediate speed shafts, **coupled** taper roller bearings plus one swinging roller bearing on high speed shafts with train of gears 2I, C2I, C3I and intermediate train of gears C2I, taper roller bearing plus one cylindrical roller bearing on high speed shaft with train of gears 3I;
- oil bath lubrication; synthetic or mineral oil (ch. 31) including filler plug with **valve**, drain and level plug; sealed;
- additional bearings lubrication through proper pipelines or pump;
- natural or forced cooling (by fan, coil or independent cooling unit with heat exchanger, see ch. 30);
- paint: external coating in water-soluble dual-compound polyurethan enamel resistant to atmospheric and aggressive agents (corrosivity class C3 ISO 12944-2); suitable for further coats only with dual-compound products after degreasing and sanding; color blue RAL 5010 DIN 1843, other colors and/or painting cycles on request, see ch. 30); internal protection in synthetic paint appropriate for resistance to mineral oils or to polyalphaolefines synthetic oils;
- non-standard designs: backstop device (always prearranged), shaft mounting arrangements, one or double extension solid low speed shaft, **hollow** low speed shaft with shrink disc, special paints, etc. (ch. 30).

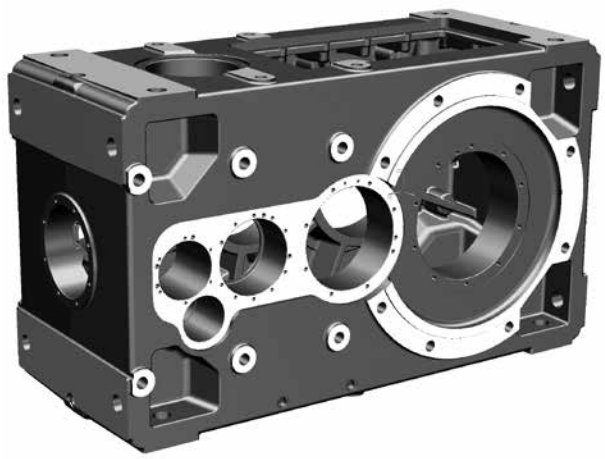

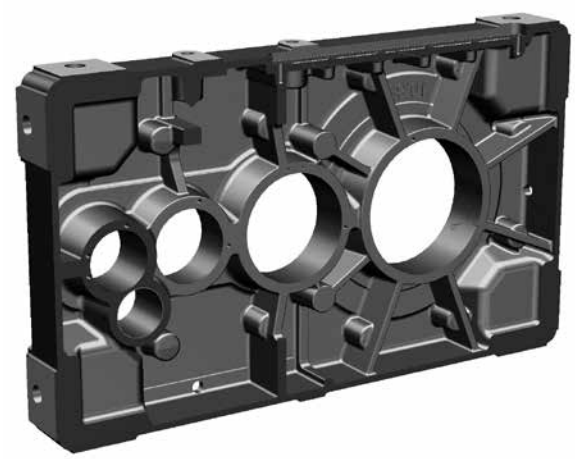

Train of gears

- 2, 3, 4 cylindrical gear pairs (helical gear units);
- 1 bevel gear pair plus 2, 3 helical gear pairs (bevel helical type);
- 1 double size (standard and strengthened)
- nominal transmission ratios to R 20 series for trains of gears 2I (i_N = 10 ... 25); 3I (i_N = 25 ... 125, excluding i_N = 112), and C2I (i_N = 20 ... 125, excluding i_N = 112); to R 10 series for 4I (i_N = 125 ... 315) and C3I (i_N = 125 ... 315);
- casehardened and hardened gear pairs in 16 CrNi4 or 20 MnCr5 (depending on size) and 18 NiCrMo5 steel, according to UNI 7846-78;
- helical toothed cylindrical gear pairs with **ground** profile;
- GLEASON spiral bevel gear pairs with **ground** profile;
- gear load capacity calculated for tooth breakage and pitting.

Specific standards

- nominal transmission ratios and principal dimensions according to UNI 2016 (DIN 323-74, NF X 01.001, BS 2045-65, ISO 3-73);
- toothing profile to UNI 6587-69 (DIN 867-86, NF E 23.011, BS 436.2-70, ISO 53-74);
- shaft heights to UNI 2946-68 (DIN 747-76, NF E 01.051, BS 5186-75, ISO 496-73);
- medium series fixing holes to UNI 1728-83 (DIN 69-71, NF E 27.040, BS 4186-67, ISO/R 273);
- cylindrical shaft ends to UNI ISO 775-88 (DIN 748, NF E 22.051, BS 4506-70, ISO/R 775) with tapped butt-end hole to UNI 9321 (DIN 332 BI. 2-70, NF E 22.056) excluding correspondence d-D;
- parallel keys UNI 6604-69 (DIN 6885 BI. 1-68, NF E 27.656 and 22.175, BS 4235.1-72, ISO/R 773-69);
- mounting positions derived from CEI 2-14 (DIN EN 60034-7, IEC 34.7);
- load capacity verified according to UNI 8862, DIN 3990, AFNOR E 23-015, ISO 6336; thermal capacity verified.

Size	T_{N2} [lb in] - F_{r2} [lb]	I	2I	3I	4I	CI	ICI	C2I	C3I
140	45 000 - 6 300		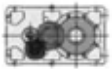	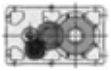	–			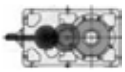	–
160	69 000 - 8 000		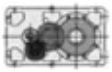	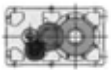	–			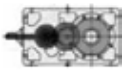	–
180	97 500 - 10 000		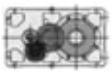	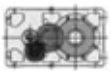	–			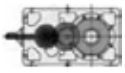	–
200	136 000 - 12 500		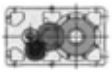	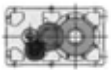	–			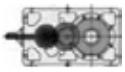	–
225	195 000 - 16 000		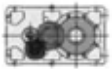	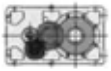	–		–	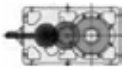	–
250	280 000 - 20 000		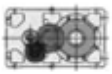		–		–	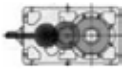	–
280	387 000 - 25 000		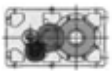	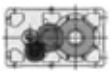	–		–	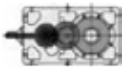	–
320	487 000 - 31 500		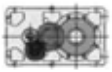	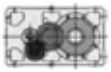	–		–	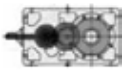	–
321	615 000 - 31 500		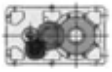	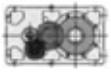	–		–	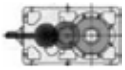	–
360	775 000 - 40 000		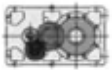		–		–	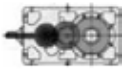	–
400	797 000 - 45 000	–	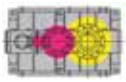	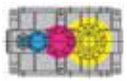		–	–	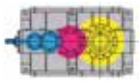	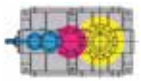
401	912 000 - 45 000	–	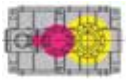	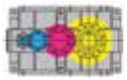	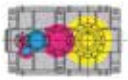	–	–	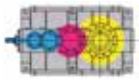	

20 - Designation

Designation code

R C2I 400 U O 2 A - 25.4 B3

INPUT SPEED
(see page 380)

MOUNTING POSITION
(see page 379)

TRANSMISSION RATIO
(see page 375)

DESIGN
A standard (s. ch. 26, 28)
... others (see ch. 26, 28)

MODEL
2

SHAFT POSITIONS
P helical
O bevel helical

MOUNTING
U universal

SIZE
400, 401

TRAIN OF GEARS
Parallel shaft
2I 2 cylindrical gear pairs
3I 3 cylindrical gear pairs
4I 4 cylindrical gear pairs

Right angle shafts
C2I 1 bevel and 2 cylindrical gear pairs
C3I 1 bevel and 3 cylindrical gear pairs

MACHINE
R gear reducer

Note: For ATEX environment see details at page 447.

Gear reducer mounting position

Mounting positions of gear reducers and gearmotors are stated at ch. 26, 28 (the designation of mounting position is referred to foot mounting only, even if gear reducers are in universal mounting). Here following see some designation examples of important mounting positions.

1. **Standard** mounting position **B3**; in case of no specific needs, **prefer the adoption of B3 mounting positions** as it is the most advised from a technical and economic point of view (maximum simplification of lubrication system, lower oil splash, lower gear reducer heating, stock availability).

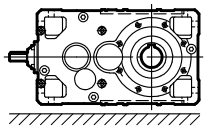

2. **Non-standard** mounting positions

2a. Mounting position to catalog (see ch. 26, 28), **one only** and **fixed**, differing from B3; e.g.: mounting position **B6**

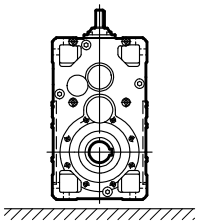

2b. **Inclined** and **fixed** mounting position ; e.g.: mounting position **B6 - 20° B3**

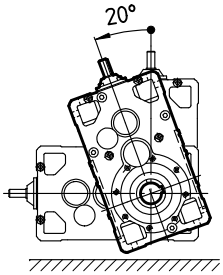

2c. **One only mounting** position **but defined within a predetermined angle**; e.g.: mounting position included among **B6 - 20° B3 / B6 - 65° B8**

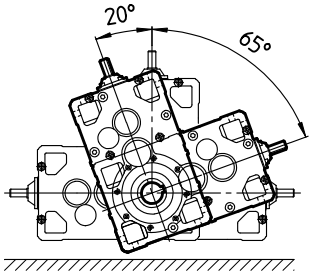

2d. **Oscillatory mounting position** (gear reducer oscillating when running); e.g.: mounting position **B6 - 20° B3 / B6 - 65° B8 oscillatory**

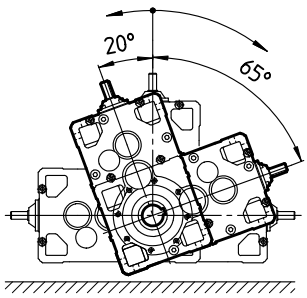

UT_C 2088

Input speed

The designation is to be completed stating the input speed n_1, in the following cases:

- n_1 > 1800 rpm or $n_1 \leqslant$ 355 rpm;
- for cases highlighted with following symbols (▲, ▼, 💧) (ch. 26, 28);
- when forced cooling is required.

Example:

R 2I 400 UP2A/17.6 **mounting position V5**, n_1 **= 900 rpm**

R C2I 401 UO2A/51.3 **mounting position B3**, n_1 **= 2000 ÷ 600 rpm**

Accessories and non-standard designs

In the event of a gear reducer being required in a design different from those stated above, specify it in detail (ch. 35).

21 - Service factor fs

21 - Service factor *fs*

Service factor *fs* takes into account the different running conditions (nature of load, running time, frequency of starting, speed n_2, other considerations) which must be referred to when performing calculations of gear reducer selection and verification.

The power and torques shown in the catalog are nominal values (i.e. valid for *fs* = 1).

The **minimum service factor required** is given by the following ratio:

$$fs \text{ required} \geqslant fs_1 \cdot fs_2 \cdot fs_3 \cdot fs_4 \cdot fs_5$$

where fs_1 … fs_5 are stated in the following tables.

Service factor fs_1 based on the **nature of load** and **running time**

Nature of load[1] of the driven machine		fs_1 Running time [h/d] ⩽				
Ref,	Description	**2**	**4**	**8**	**16**	**24**
a	Uniform	1	1	1	1.18	1.32
b	**Moderate overloads** (1.6 times the normal load)	1.12	1.18	1.25	1.5	1.7
c	**Heavy overloads** (2.5 times the normal load)	1.4	1.5	1.7	2	2.24

Service factor fs_2 based on **nature of load** and of **frequency of starting**

Nature of load[1] of the driven machine		fs_2 Frequency of starting ***z*** [starts/h]					
Ref.	Description	**1**	**2**	**4**	**8**	**16**	**32**
a	Uniform	1	1.06	1.12	1.18	1.25	1.5
b	**Moderate overloads** (1.6 times the normal load)	1	1	1.06	1.12	1.18	1.4
c	**Heavy overloads** (2.5 times the normal load)	1	1	1	1.06	1.12	1.32

Service factor fs_3 based on **motor type**

Motor type Description		fs_3
Electric, turbine		1
Electric three-phase brake motor		1.06[4]
Internal combustion	multi-cylinder	1.25
	single-cylinder	1.5

Service factor fs_4 based on **reliability level**

Reliability level[5]	fs_4
Standard	1
Average	1.25
High	1.4

Service factor fs_5 based on **output angular speed** n_2

Output speed n_2 [rpm]	fs_5
> 560	1.32
560 ÷ 355	1.25
355 ÷ 224	1.18
224 ÷ 140	1.12
140 ÷ 90	1.06
⩽ 90	1

Details and considerations about service factor.

fs values stated above are valid for:

- maximum time on overload 15 s, on starting 3 s; if over and/or subject to heavy shock effect, consult us;
- a whole number of overload cycles (or start) **imprecisely completed** in 1, 2, 3 or 4 revolutions of low speed shaft; if **precisely**, a continuous overload should be assumed;

Motors having a starting torque not exceeding nominal values (star-delta starting, particular types of motor operating on direct current, and single-phase motors), and particular types of coupling between gear reducer and motor, and gear reducer and driven machine (flexible, centrifugal, fluid and safety couplings, clutches and belt drives) affect service factor favourably, allowing its reduction in certain heavy-duty applications; consult us if need be.

1) For indication on the type of load of the driven machine according to the application, see table on next page.

4) For Y- Δ starting, running with inverter or with «soft start» devices, fs_3 = 1.

5) Reliability degrees higher than normal are required in presence of very difficult maintenance, great importance of gear reducer in the production cycle, safety, etc.

21 - Service factor *fs*

Classification of nature of load according to application

Application	Ref. load *
Stirrers and mixers	
Liquids:	
– constant density	a
– varying density, solids in suspension, high viscosity	b
concrete mixers, mullers, flash mixers	c
Feeders and batchers	
rotary (roller, table, sector)	a
belt, screw, plate	a, b
reciprocating, shaker	c
Compressors	
centrifugal (single-stage, multi-stage)	a
rotary (vane, lobe, screw)	b
axial	b
reciprocating:	
– multi-cylinder	b
– single-cylinder	c
Elevators	
belt, centrifugal or gravity discharge, screw jacks, escalators	a, b
bucket, arm and tray elevators, paddle wheel, hoists, skips	b
man lifts, mobile scaffolding, passenger transport (cable cars, chair, ski, gondola lifts etc.)	a, b
Excavators and dredges	
cable reels, conveyors, pumps, winches (manoeuvring and utility), stackers, draining wheels	b
cutter head drives, cutters, excavators (bucket ladder, paddle wheel, cutter)	c
vehicles:	
– on rails	b
– crawlers	c
Crushers and granulators	
sugar cane, rubber, plastics	b
minerals, stone	c
Cranes, winches and travelling lifts	
travel (bridge, trolley, forks)[1]	b
slewing	b
hoist[2]	a, b
Food industry	
cookers (cereals and malt), mash tubs	a
slicers, dough mixers, meat grinders, beet slicers, centrifuges, peelers, winemaking plant, bottle/bin/cratewashers, rinsers, fillers, corkers, cappers, extruders, crate filling and emptying equipment	b
Paper mills	
winders, suction rolls, dryers, embossing machinery, bleachers, press rolls, coating rolls, paper rolls, beaters, and pulpers	a
agitators, mixers, extruders, chip feeders, calenders, felt dryers and stretchers, rag grinders, washers, thickeners	b
cutters, chippers, calenders (super), felt whippers, glazing machines, presses	c
Lumber and woodworking industries	
mechanical loaders, pallet stackers	a, b
conveyors for:	
– boards, chips, waste	b
– logs	c
machine tools (planing, cutting, cross-cut and re-sawing, tenoning, bevelling, moulding, sanding, sizing and scratch-brushing machinery etc.):	
– feed drive	b
– cutter drive	b, c
barkers:	
– mechanical and hydraulic	b
– drum	c
Oil industry	
paraffin filter presses, chillers	b
rotary drilling equipment	c
pumping equipment	
Textile industry	
calenders, cards, pickers, dryers, nappers, spinners, slashers, pads, soapers, washers, mangles, tenter frames, looms (Jacquard), warping machines, winders, knitting machines, dyeing machines, twisting frames, gig mills, cutters	b
Clay working machinery	
pug mills, extruders, rotary deslimers	b
brick and tile presses	c
Rubber and plastics industries	
extruders:	
– plastics	b
– rubber	c
mixing mills, warming mills, friction calenders, refiners, tubers and strainers, rolling mills	b
crackers, masticators	c
Wrapping and stacking machinery	
wrapping (film, cardboard), binding, strapping and labelling equipment	a
palletizing/depalletizing and stacking/unstacking machinery, palletizing robots	b
Engineering machine tools	
boring, shaping, planing, broaching, gear cutting and FMS machines, etc.:	
– main drivers (cut and feed)	b
auxiliary drives (tools magazine, chip conveyor, workpiece infeed)	a
Mechanisms	
indexing, crank and slotted link, Maltese cross, articulated parallelogram	b
rod and crank, cam control (cam and tappet, cam and rocker)	c
Metal mills	
shears:	
– trimming, cropping, facing	b
– for sheet/plate, ingots, billets	c
transverse drive rollers, draw benches, coilers, inverter, draglines, flattening rolls, bending rolls	b
pushers, descaling equipment, pipe welders, mill roll train drives, rolling mills, forging presses, billet croppers, power hammers, punches, impact extruders, tapping machines, straightening presses	c
Rollerways	b, c
Mills	
rotary (rod, roller, pebble, ball)	b
hammer, pin crusher, centrifugal, impact, rolling (ball or roller)	c
Pumps	
rotary (gear, screw, lobe, vane) and axial	a, b
centrifugal:	a
– liquids, constant density	b
– liquids, variable density or high viscosity	b
proportioning	
alternative:	
– single acting (⩾ 3 cylinders), double acting (⩾ 2 cylinders)	b
– single acting (⩽ 2 cylinders), double acting single cylinder	c
Rotating drums	
dryers, chillers, rotary kilns, washing machines	b
tumblers, cement kilns	c
Transport conveyors	
belts (plastic, rubber, metal) for:	
– fine grade loose material	a
– coarse grade loose material or discrete items	b
belt, apron, bucket, slat, tray, roller, screw, chain, overhead rail, assembly	b
drag (slat, flight, chain, Redler, etc.) ground level chain, flow accumulating	b
reciprocating, shaker	c
overhead power rail	
Sewage treatment	
biological tanks (revolving disk)	a
dewatering screws, collectors, rotary screens, thickeners, vacuum filters, anaerobic digestion tanks	b
aerators, rotary breakers	c
Screen and riddles	
air washing, travelling water intake	a
rotary (stone, gravel, cereals)	b
vibrating screens, riddles, jigs	c
Fans	
small diameter (centrifugal, axial-flow)	a
large diameter (mines, furnaces, etc.) cooling towers (inducted or forced draft), ducted, piston	b

* Nature of load reference admits of modification where precise knowledge of duty is available.
1) In the traverse movement of the bridge usually it is necessary to have at least fs > 1,6 and in the storeyard cranes fs > 2 (container handling).
2) For selection of fs to F.E.M./I-10.1987, consult us.

Page intentionally left blank

22 - Thermal power *Pt* [hp]

22 - Thermal power *P*t [hp]

The nominal thermal power Pt_N, stated in red in the table, is that which can be applied at the gear reducer input, without exceeding 203 °F[1)] (95 °C[1)])approximately oil temperature when operating in following running conditions:

- input speed n_1 = 1 500 rpm;
- mounting position B3;
- continuous duty S1;
- maximum ambient temperature 68 °F (20 °C) (in the table the values referred to 104 °F (40 °C) are stated as well);
- maximum altitude 3 300 ft above sea level;
- air speed ⩾ 4 ft/s (typical value in presence of a self-cooled motor).

Nominal thermal power Pt_N

Size	T_{amb}	Pt_N [hp]		
		2I	**3I, C2I**	**4I, C3I**
400, 401	**20 °C**	355	300	224
	40 °C	300	224	170

Always verify that the power applied P_1 is lower than or equal to gear reducer thermal power Pt_N multiplied by correction coefficients ft_1, ft_2, ft_3, ft_4, ft_5 (stated in the following tables) considering the various operating conditions:

$$P_1 \leqslant Pt_N \cdot ft_1 \cdot ft_2 \cdot ft_3 \cdot ft_4 \cdot ft_5$$

When the power applied is not constant and when the exact load cycle is given, it is possible, or advisable, to calculate the equivalent power applied, according to the formula:

$$P_{1th} = \frac{1}{\eta} \cdot \sqrt[3]{\frac{P^3_{21} \cdot t_1 + P^3_{22} \cdot t_2 + \ldots + P^3_{2i} \cdot t_i + \ldots + P^3_{2n} \cdot t_n}{t_c}}$$

where:
η is the gear reducer efficiency (see ch. 6);
P_{2i} [hp] is the power, referred to the gear reducer output, required in the time interval t_i [s];
$t_c = t_1 + t_2 + \ldots + t_i + \ldots + t_n$ is the total duration of load cycle [s].

In these cases choose factor ft_2 from the continuous duty column S1.

Whenever the thermal verification should not be satisfied, in spite the prearrangement of cooling system, it is possible to install an **independent cooling unit with heat exchanger** (see ch. 30.(29)); consult us.

Thermal power needs not be taken into account when maximum duration of continuous running time is 1 ÷ 3 h (from small to large gear reducer sizes) followed by rest periods long enough to restore the gear reducer to near ambient temperature (likewise 2 ÷ 4 h). For maximum ambient temperature higher than 104 °F (40 °C) or lower than 32 °F (0 °C) consult us.

1) Corresponding to an average temperature of the external housing surface of approximately 185 °F (85 °C); locally housing temperature can achieve the oil temperature.
1) If, simultaneously, forced cooling with coil is acting, multiply the values by 1,8.
4) For positions, dimensions and design verification see ch. 30.
5) Value also valid for electric fan (installed by the Buyer).
6) With axial fan, values are to be multiplied by 1.12. Consult us.
7) (Duration of running on load / 60) · 100 [%].

22 - Thermal power *P*t [hp]

Thermal factor ft_1 (= $ft_{1a} \cdot ft_{1b}$) according to **cooling system** and **input speed** n_1

Cooling system				ft_{1a}, ft_{1b} input speed n_1 [rpm]				
				750	**1 000**	**1 200**	**1 500**	**1 800**
ft_{1a}	Natural convection	train of gears	2I	1.4	1.32	1.25	1.18	1
			3I, 4I, C2I, C3I	1.12	1.12	1.09	1.06	1
ft_{1b}	Forced cooling[3) 4) 6)]	with 1 radial fan (helical gear units)		1.12	1.18	1.25	1.32	1.4
		with 2 radial fans (helical gear units) with 1 radial fan (bevel helical gear units)		1.25	1.4	1.6	1.8[5)]	2
	with water coil[4)]			2				
	with heat exchanger[4)]			see ch. 30				

Thermal factor ft_2 according to **ambient temperature** and **service**

Maximum ambient temperature °F (°C)	ft_2 Continuous duty **S1**	Intermittent duty **S3 ... S6** Cyclic duration factor [%] for 60 min running[7)]			
		60	**40**	**25**	**15**
122 (50)	0.6	0.71	0.8	0.95	1
104 (40)	0.75	0.9	1	1.12	1.25
86 (30)	0.9	1.06	1.18	1.32	1.5
68 (20)	**1**	1.18	1.32	1.5	1.7
50 (10)	1.12	1.32	1.5	1.7	1.9

Thermal factor ft_4 according to **altitude of installation**

Altitude a.s.l. [ft]	ft_4
⩽ 3 300	**1**
3 300 ÷ 6 600	0.95
6 600 ÷ 9 800	0.9
9 800 ÷ 13 100	0.85
⩾ 13 100	0.8

Thermal factor ft_3 according to **mounting position** (see also ch. 26, 28): where it is not specified ft_3 = 1

Train of gears		ft_3 mounting position				
		B3, B8	**B6**	**B7**	**V5**	**V6**
2I		1	0.9	0.8	0.8	0.9
3I		1	0.9	0.8	0.8	0.9
4I		1	0.9	0.8	0.8	0.9
C2I	UO2A, UO2N sin UO2V, UO2L sin	1	0.9	0.8	0.9 with upper low speed wheel 0.8 with low speed wheel below	
	UO2H, UO2M sin	0.9	0.8	0.71	0.8 with upper low speed wheel 0.71 with low speed wheel below	
C3I		1	0.9	0.8	0.9 with low speed shaft below 0.8 with upper low speed wheel	

Thermal factor ft_5 according to cooling air speed on housing

Air speed ft/s	Installation environment	ft_5
< 2	very small environment or without air movements or with protected gear reducer	consult us
2	small environment and with limited air movements	0.71
3.15	wide environment without air movements	0.9
4	wide environment with light air movements (e.g. gearmotor with self-cooled motor	**1**
8	open and colled	1.18
12.5	with heavy air movements	1.32

Page intentionally left blank

23 - Selection

23.1 - Preliminary considerations

Motor power

Taking into account the efficiency of the gear reducer, and other drives – if any – motor power is to be as near as possible to the power rating required by the driven machine: accurate calculation is therefore recommended.

The power required by the machine can be calculated, seeing that it is related directly to the power-requirement of the work to be carried out, to friction (starting, sliding of rolling friction) and inertia (particularly when mass and/or acceleration or deceleration are considerable). It can also be determined experimentally on the basis of tests, comparisons with existing applications, or readings taken with amperometers or wattmeters.

An oversized motor would involve: a greater starting current and consequently larger fuses and heavier cable; a higher running cost as power factor (cos w) and efficiency would suffer; greater stress on the drive, causing danger of mechanical failure, drive being normally proportionate to the power rating required by the machine, not to motor power.

In such cases, a detailed description of duty requirement must be made available: duration and frequency per hour of work cycle, acceleration and deceleration requirements if any, inertia, loads deriving from friction and work. In the absence of such data it is essential to provide all details which will permit their determination.

Only high values of ambient temperature, altitude, frequency of starting or other particular conditions require an increase in motor power.

Input speed n_1

The maximum gear reducer input speed, valid for **continuous duty S1 and in absence of a forced lubrication system of gears and bearings** (**with eventual heat exchanger**), is stated in the following table according to train of gears and gear reducer size; however, according to specific transmission ratio, this limit could not be achieved: in these cases, in the selection tables (s. ch. 25, 27), performance P_{N2} is not stated and value T_{N2} is valid only for B selection method (s. 23.2).

For intermittent duty or for particular needs, higher speeds are possible, but always lower than n_{1peak}; consult us.

Peak speed is admitted for a maximum duration of 5 s, including a proper rest period or a low speed period for the cooling of gear reducer, especially on high speed shaft side.

For variable n_1, the selection should be carried out on the basis of n_{1max}, but it should also be verified on the basis of n_{1min}.

When there is a belt drive between motor and gear reducer, different input speeds n_1 should be examined in order to select the most suitable unit from engineering and economy standpoints alike.

Input speed should not be higher than 1 800 rpm, unless conditions make it necessary; better to take advantage of the transmission, and use an input speed lower than 900 rpm.

Size	Train of gears											
	2I			3I		4I		C2I			C3I	
	i_N	n_{1max} rpm	n_{1peak} rpm	n_{1max} rpm	n_{1peak} rpm	n_{1max} rpm	n_{1peak} rpm	i_N	n_{1max} rpm	n_{1peak} rpm	n_{1max} rpm	n_{1peak} rpm
400, 401	⩽ 11.2	1 600	2 120	1 800	2 240	1 800	2 360	⩽ 25	1 500	2 240	1 800	2 360
	⩾ 12.5	1 800	2 120					⩾ 28	1 800	2 240		

23.2 - Determining the gear reducer size

Constant load

- Fill out the questionnaire for the selection on page 392; in particular, make available required output power P_2, the angular speeds n_2 and n_1, the running conditions (nature of load, frequency of starting h/d, frequency of starting z, other considerations) referring to ch. 21.
- Determine service factor fs required on the basis of running conditions (ch. 21).
- Select the gear reducer size (also, the train of gears and transmission ratio i at the same time) on the basis of n_2, n_1 and of a power P_{N2} greater than or equal to $P_2 \cdot fs$ (ch. 25 and 27).
- Calculate power P_1 required at input side of gear reducer using the formula P_2 / η, where $\eta = 0.97 \div 0.94$ is the efficiency of gear reducer (ch. 24).

When for reasons of motor standardization, power P_1 applied at input side of gear reducer turns out to be higher than the power required (considering motor/gear reducer efficiency), it must be certain that this excess power applied will never be required, and frequency of starting z is so low as not to affect service factor (ch. 23. (3).

Otherwise, make the selection by multiplying P_{N2} by P_1 applied / P_1 required.

Calculations can also be made on the basis of torque instead of power; this method is even preferable for low n_2 values.

Variable load

- Fill out the questionnaire for the selection on page 392; in particular, make available the torque T_2 and the angular speed n_2 required at gear reducer output, the running conditions (nature of load, duration of running required, frequency of starting ***z***, other considerations) referring to ch. 21.
- In presence of required torque T_2 and angular speed n_2 variable in time, according to a given load cycle, calculate the equivalent torque T_{2eq} and angular speed n_{2eq} with the following formulae:

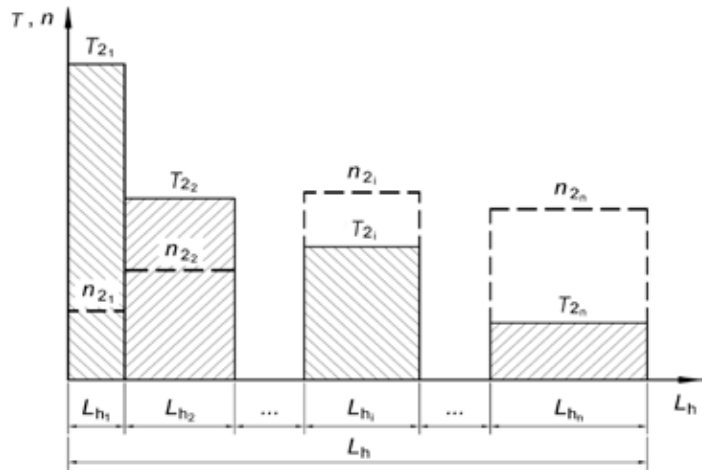

$$T_{2eq} = \sqrt[p]{\frac{T_{2_1}^p \cdot n_{2_1} \cdot L_{h_1} + T_{2_2}^p \cdot n_{2_2} \cdot L_{h_2} + \ldots + T_{2_i}^p \cdot n_{2_i} \cdot L_{h_i} + \ldots + T_{2_n}^p \cdot n_{2_n} \cdot L_{h_n}}{n_{2_{eq}} \cdot L_h}}$$

$$n_{2_{eq}} = \frac{n_{2_1} \cdot L_{h_1} + n_{2_2} \cdot L_{h_2} + \ldots + n_{2_i} \cdot L_{h_i} + \ldots + n_{2_n} \cdot L_{h_n}}{L_h}$$

where:

T_{2eq}	[lb in] is the load cycle equivalent torque
T_{2_i}	[lb in] is the required torque (constant) on the low speed shaft during interval *i*
n_{2eq}	[rpm] is the load cycle equivalent speed
n_{2_i}	[rpm] is the speed (constant) of the low speed shaft in the interval *i*
Lh_i	[h] is the duration of interval *i*
Lh	[h] $Lh_1 + \ldots + Lh_i + \ldots + Lh_n$ is the total duration of load cycle
p =	3.33 for a running duration > 8 h/d
p =	6.61 for a running duration ≤ 8 h/d

23.3 - Verifications

- Verify possible radial loads F_{r1}, F_{r2} and axial loads F_{a2} according to instructions and values given in ch. 29.
- When a load chart is available, and/or there are overloads – due to starting on full load (especially with high inertias and low transmission ratios), braking, shocks, gear reducers in which the low speed shaft becomes driving member due to driven machine inertia, or other static or dynamic causes - verify that the maximum torque peak (ch. 24) is always lower than $2 \cdot T_{N2}$, if hither or if it cannot be evaluated in the above cases – install a safety device so that $2 \cdot T_{N2}$. will be never exceeded.
- Verify for each single interval i of the eventual load cycle that the required torque T_{2i} is lower than $2 \cdot T_{N2}$ and therefore never higher than T_{N2} valid for $n_1 \leqslant 90$ rpm (see ch. 25 and 27) and that input speed (relevant to output shaft speed n_{2i}) is $n_{1i} \leqslant n_{1max}$ (s. ch. 23.1);
- Verify the possible need for forced cooling (ch. 22 and 30).
- Verify that the input speed is lower than or equal to n_{1max} (see ch. 23.1);
- For gear reducers with backstop device, having particular i_N or low values of f_s, verify max load capacity of backstop device (ch. 30).

23.4 - Selection questionnaire

Make available all data and information necessary for a correct gear reducer selection by filling out the questionnaire on next page.

Attach any technical specifications relevant to gear reducer, excluding data regarding the machine of the plant.

When possible, attach all possible drawings, pictures and/or any further information facilitating the technical and economic selection.

23 - Selection

1 Conditions of application

Area of application/Industry sector

Type of machine to be driven

☐ new machine
☐ existing and running machine
gear reducer in use

Ambient temperature [°F]

min	normal	max

Altitude [ft a.s.l.]

Ambient:
☐ normal (industrial) indoor
☐ normal (industrial) outdoor
☐ dusty
☐ corrosive / humid

Gear reducer position:
☐ tight space with insufficient air recycle (v_{air} < 2 ft/s)
☐ wide space with free air recycle (v_{air} ⩾ 4 ft/s)
☐ outdoor, protected against extremes of weather and radiation

2 Data of load

Output speed required [rpm]

min	nominal	max

Output torque required [lb in]

min	nominal	max

Power required on low speed shaft [hp]

min	nominal	max

Input speed (gear reducers) [rpm]

min	nominal	max

Nature of load:
☐ uniform
☐ moderate overloads
☐ heavy overloads

Frequency of starting [starts/h]

Moment of inertia of machine [lb ft²]

min	normal	max

Running time [h/d]

Total duration [h]

Duty cycle (S1 ... S10)

Load cycle attached

☐ yes
☐ no

3 Motor

Motor type:
☐ asynchronous three-phase (a.c.)
☐ asynchronous three-phase + inverter
☐ d.c. + converter
☐ internal combust. (one - cylinder)
☐ internal combust. (multi-cylinder)

Power P_1 [hp]

min	nominal	max

Nominal speed n_1 [rpm]

min	nominal	max

A.c. motor supply:

voltage [V]	frequency [Hz]

IEC motor size (a.c. motor)

A.c. motor connection:
☐ direct
☐ Y / Δ
☐ soft starter / inverter

Electromagnetic brake
☐ parking
☐ working
☐ safety
Braking torque [lb in]

Starting torque [lb in]

Moment of inertia [lb ft²]

Electric motor design (a.c. and d.c.):
☐ with fan cooling
☐ with encoder:
☐ with tachometer generator

Connection with gear reducer:
☐ with coupling
☐ with V-belt

section	No.	d_m [in]	d_1 [in]

☐ with toothed belt

section	No.	d_m [in]

Eventual limitation of drive overall dimensions

4 Gear reducer

Mounting position

Output shaft direction of rotation
☐ white arrow
☐ black arrow
☐ black and white arrow

Backstop device (if any)
☐ white arrow free rotation
☐ black arrow free rotation

Type of cooling admitted
☐ fan cooling
☐ coil
☐ internal heat exchanger
☐ unit UR O/A
☐ unit UR O/W

Type of connection to machine
☐ shaft mounting
☐ flexible / semi-flexible coupling
☐ universal coupling
☐ timing belt

pitch	d_m	d_1	φ

☐ chain

pitch	No.	z_2	z_3	overhang [in]	φ

☐ straight tooth helical gear pair

pitch	No.	z_2	z_3	overhang [in]	φ

Eventual axial load F_a [lb]

← - - →

Eventual reduction of drive overall dimensions

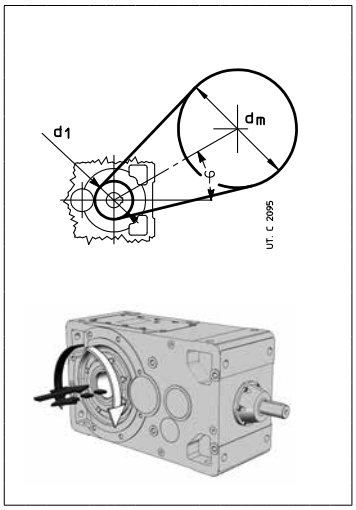

24 - Structural and operational details

Sound levels L_{WA} and L_{pA}

Standard production sound power level L_{WA} [dB(A)][1] and mean sound pressure level L_{pA} [dB(A)][2] assuming nominal load, and input speed n_1 = 1 800[3] rpm. Tolerance +3 dB(A).

If required, gear reducers can be supplied with reduced sound levels (normally 3 dB(A) less than tabulated values): consult us.

In case of gear reducers with fan cooling, add to the values in the table 3 dB(A) for 1 fan and 5 dB(A) for 2 fans.

Size	Helical gear reducers												Bevel helical gear reducers					
	R 2I				**R 3I**				**R 4I**				**R C2I**				**R C3I**	
	$i_N \leq 12{,}5$		$i_N \geq 14$		$i_N \leq 63$		$i_N \geq 71$		$i_N \leq 160$		$i_N \geq 200$		$i_N \leq 63$		$i_N \geq 71$			
	L_{WA}	L_{pA}	L_{WA}	L_{pA}	L_{WA}	L_{pA}	L_{WA}	L_{pA}	L_{WA}	L_{pA}	L_{WA}	L_{pA}	L_{WA}	L_{pA}	L_{WA}	L_{pA}	L_{WA}	L_{pA}
400, 401	**107**	95	**104**	92	**103**	91	**100**	88	**97**	85	**94**	82	**100**	88	**98**	86	**94**	82

1) To ISO/CD 8579.
2) Mean value of measurement at 1 m from external profile of gear reducer standing in free field on a reflecting surface.
3) In the speed range n_1 = 750 ÷ 1 500 rpm, sum to the table values: –5 dB(A) for 750 rpm; –4 dB(A) for 1000 rpm; –3 dB(A) for n_1 = 1 200 rpm; –2 dB(A) for n_1 = 1 500 rpm.

Efficiency

The efficiency stated in the table is rough and referred to nominal running conditions (torque, speed, temperature); it is necessary to keep in mind that the efficiency value can diminish considerably for values of $T_2 << T_{N2}$

Nominal efficiency	Helical gear reducers			Bevel helical gear reducers	
	R 2I	**R 3I**	**R 4I**	**R C2I**	**R C3I**
η	0.970	0.955	0.940	0.955	0.940

Overloads

When a gear reducer is subjected to high static and dynamic overloads, the need arises for verifying that such overloads will always remain lower than $2 \cdot T_{N2}$ (see ch. 25, 27).

Overloads are normally generated when one has:

– starting on full load (especially for high inertias and low transmission ratios), braking, shocks;

– gear reducers in which the low speed shaft becomes driving member due to driven machine inertia;

– applied power higher than that required; other static or dynamic causes.

The following general observations on overloads are accompanied by some formulae for carrying out evaluations in certain typical instances.

Where no evaluation is possible, install safety devices which will keep values within T_{N2}.

Starting torque

When starting on full load (especially for high inertias and low transmission ratios) verify that $2 \cdot T_{N2}$ is equal to or greater than starting torque, by using the following formula:

$$T_2\ \text{start} = \left(\frac{T\ \text{start}}{T_N} \cdot T_2\ \text{available} - T_2\ \text{required}\right) \frac{WK_R^2}{WK_R^2 + WK_0^2} + T_2\ \text{required}$$

where:

T_2 required is the torque absorbed by the machine through work and frictions;

T_2 available is the output torque due to motor nominal power;

WK_0^2 is the moment of inertia (of mass) of the motor;

WK_R^2 is the external moment of inertia (of mass) (gear reducers, couplings, driven machine) referred to the motor shaft;

NOTE: when seeking to verify that starting torque is sufficiently high for starting, take into account starting friction, if any, in evaluating T_2 required.

Stopping machines with high kinetic energy (high moments of inertia combined with high speeds) with brake motor

Verify braking stress by means of the formula:

$$\left(\frac{Tf}{\eta} \cdot i + T_2\ \text{required}\right) \frac{WK_R^2}{WK_R^2 + WK_0^2} - T_2\ \text{required} < 1.6 \cdot T_{N2}$$

where:

Tf is the braking torque applied on high speed shaft; for other symbols see above and ch. 19.

Moment of inertia (of mass) WK_1^2 [lb ft²]

The moment of inertia is referred to the high speed shaft of gear reducer, standard design; the one referred to the low speed shaft is given by following ratio: $WK_2^{\,2} = WK_1^{\,2} \cdot i^2$

Gear red, size	Moment of inertia of mass $WK_1^{\,2}$ [lb ft²]												
	2I i_N		**3I** i_N		**4I** i_N		**C2I** i_N				**C3I** i_N		
	≤ 12.5	≥ 14	≤ 56	≥ 63	≤ 160	≥ 200	≤ 31,5	35,5 ... 63	71 ... 90	≥ 100	≤ 125	160 ... 200	≥ 250
400, 401	13.16	8.15	2.87	1.19	1.14	0.26	9.55	5.37	2.54	1.97	0.97	0.64	0.31

High and low speed shaft end [mm]

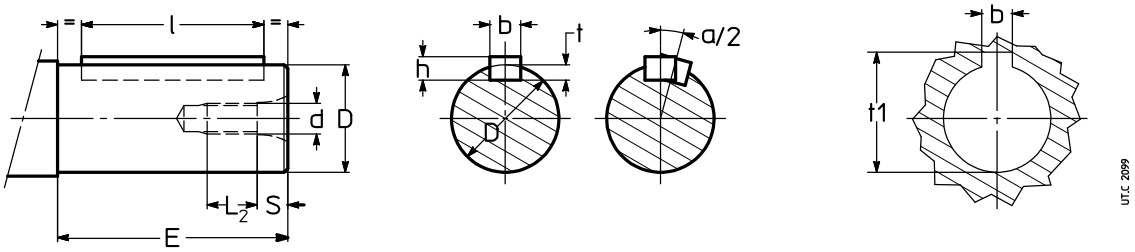

Gear reducer

(Hollow) machine shaft

Shaft end						Parallel key					Keyway		
D Ø	**E**	**d** Ø	**S**	**L_2**	**α/2** arc min 1)	**b** h9	×	**h** h11	×	**l**	**b** h9 hub N9 shaft	**t** shaft	**t_1** hub
38 k6	80	M10	7.6	18.4	3.27	10	×	8	×	70	10	5	41.3
48 k6	110	M12	9.5	22.5	3.08	14	×	9	×	90	14	5.5	51.8
55 m6	110	M12	9.5	22.5	2.75	16	×	10	×	90	16	6	59.3
65 m6	140	M16	12.7	27.3	2.33	18	×	11	×	110	18	7	69.4
70 m6	140	M16	12.7	27.3	2.55	20	×	12	×	125	20	7.5	74.9
80 m6	170	M20	16	34	2.23	22	×	14	×	140	22	9	85.4
90 m6	170	M20	16	34	1.99	25	×	14	×	140	25	9	95.4
110 m6	210	M24	19	41	1.63	28	×	16	×	180	28	10	116.4
190 m6	280	M36	27	54	1.12	B45	×	25	×	230	45	15	200.4
200 m6	280	M36	27	54	1.07	B45	×	25	×	230	45	15	210.4

1) Maximum angular disalignment of keyways on double extension shafts

Direction of rotation

The correspondence between gear reducer high speed shaft and low speed shaft direction of rotation is given at ch, 26, 28 and it is according to design and train of gears, For the arrows' meaning interpretation refer to the following examples

Helical gear reducer:
R 2I 400, 401 UP2A

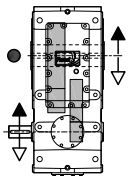

UP2A

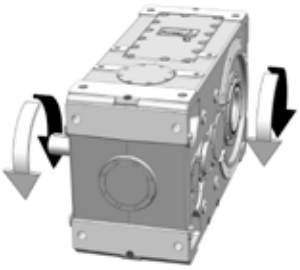

Bevel helical gear reducer:
R C2I 400, 401 UO2A

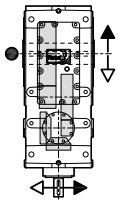

UO2A

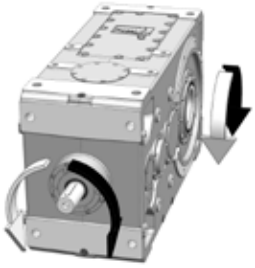

- Low speed shaft position (s. ch. 26 and 28) for the verification of radial load.

Forced lubrication of bearings and/or gears with motor pump: hydraulic circuit diagram

NOTE: Bearings and/or gear pairs to be forced lubricated are defined by Rossi according to gear reducer and application.

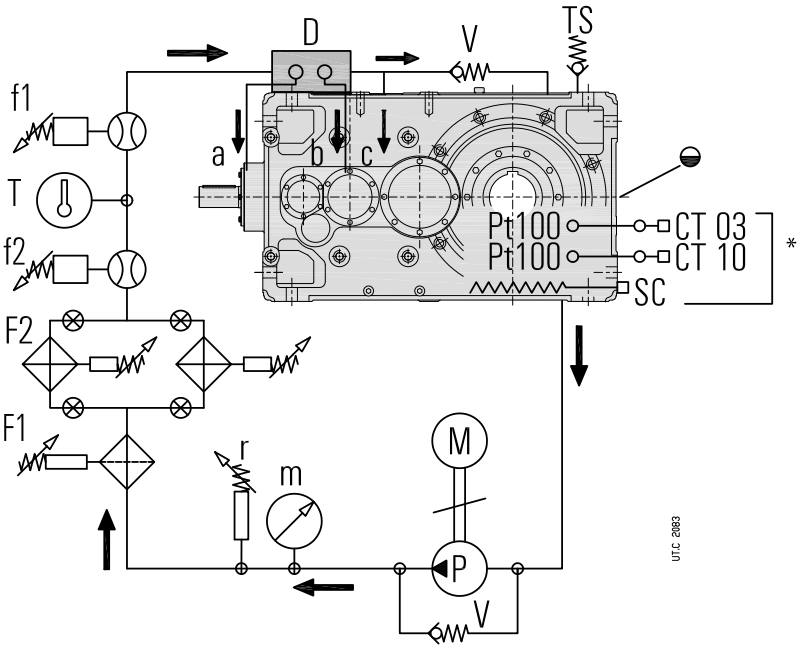

As standard

a, b, c	Gear pair/bearing pipes
m	Pressure gauge (0 - 16 bar)
M	Motor pump (ch. 30(29))
P	Pump (ch. 12(29))
T	Thermometer 32 - 248 °F (0 - 120 °C)
V	Safety valve
r	Minimum pressure gauge
TS	Filler plug
D	Flow rate
◒	Approx. oil level

On request

Pt100*	Oil temperature probe (loose)*
f1	Electric flow switch: vertical mounting
f2	Visible flow switch
F1	Filter
F2	Exchange filter
CT03N*, CT10N*	Control devices with 2 and 3 thresholds (separately supplied); supply 230 V 50 Hz*
SC*	Oil heater*

* On request, but necessary for gear reducer starting at $T_{ambient}$ (= T_{oil}) ⩽ 77 °F (25 °C): pre-heat the oil with the heater.

Starting at low temperature T_{oil} = $T_{ambient}$ ⩽ 77 °F (25 °C) of gear reducer with forced lubrication

Always foresee the oil heater and the 2-threshold signalling device CT03N + Pt100 and the 3-threshold signalling device CT10N + Pt100.

- **CT03N** (2-threshold device) and relevant temperature probe Pt100, to pilot the heater; set the operating threshold at 122 °F (50 °C) (stopping the heater supply) and the reset threshold at 86 °F (30 °C).
- **CT10N** (3-threshold device) and relevant temperature probe Pt100 to start the motor pump and the motor of gear reducer; it is advised to delay the starting of gear reducer motor by at least 1 min from the motor pump starting so that oil is already circulating: the motor pump must run simultaneously with gear reducer; set the operating threshold at 86 °F (30 °C) to start the gear reducer and the motor pump, the reset threshold at 32 °F (0 °C) (50 °F (10 °C)) when having the independent cooling unit with heat exchanger) and the safety threshold at 194 °F (90 °C).

For starting with T_{oil} (= $T_{ambient}$) ⩽ 32 °F (0 °C) the devices CT03N and CT10N must be set according to the real ambient temperature.

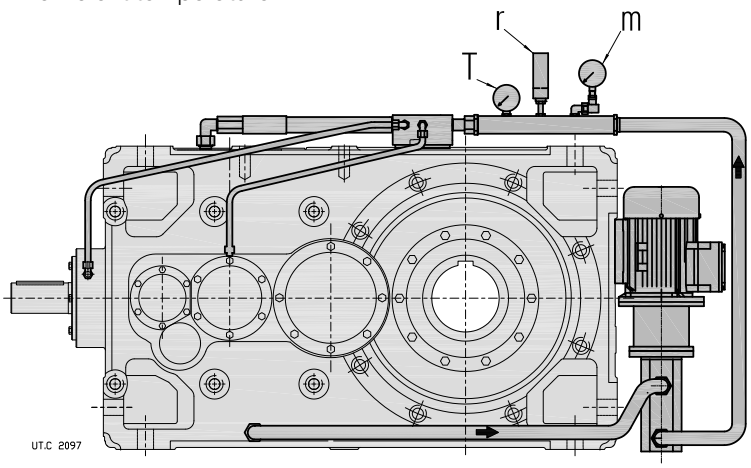

Example of forced lubrication with motor pump; the exact position of motor pump depends on the gear reducer size, train of gears, mounting position and available dimensions: for this reason, on request, a drawing of the specific solution will be supplied; pipes are usually realized with sucation and delivery flexible pipes and with rigid pipes between the flow rate and the bearings.

Bearing and/or gear pair forced lubrication with oil/air or oil/water independent cooling unit: hydraulic circuit diagram

NOTE: Bearings and/or gear pairs to be forced lubricated are defined by Rossi according to gear reducer and application.

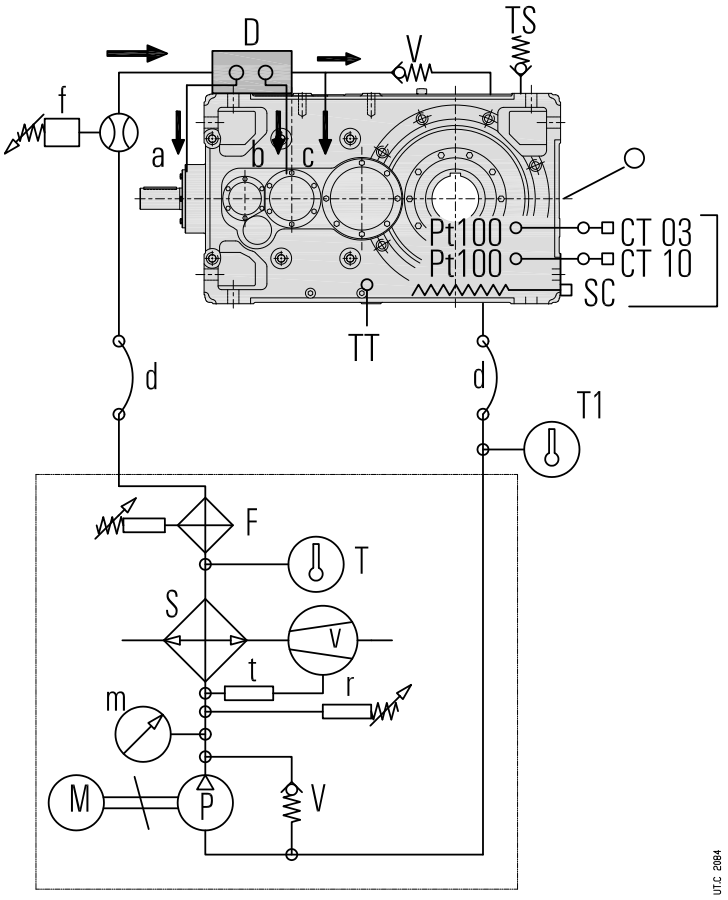

As standard

a, b, c	Gear pair/bearing pipes
d	Flexible connection (by Customer)
m	Pressure gauge (0 - 16 bar)
M	Motor pump (ch. 30(29))
P	Pump (ch. 30(29))
S	Oil/air or oil/water exchanger
v	Motor fan (UR O/A...)
t	Fan thermostat 32 - 248 °F (0 - 120 °C) (UR O/A)
T	Thermometer 32 - 248 °F (0 - 120 °C)
V	Safety valve
r	Minimum pressure gauge
TS	Filler plug
D	Flow rate
◒	Approx. oil level

On request

Pt100*	Oil temperature probe (loose)*
f	Flow switch (loose)
F	Filter with electric blockage warning (with UR O/A... it is supplied loose)
CT03N*, CT10N*	Signalling device (loose)*
T1	Thermometer 32 - 248 °F (0 - 120 °C)
TT	Bi-metal type thermostat
SC*	Oil heater*

* On request, but necessary for gear reducer starting at $T_{ambiene}$ (= T_{oil}) ≤ 77 °F (25 °C): pre-heat the oil with the heater.

For **starting at low temperature**: s. previous page.

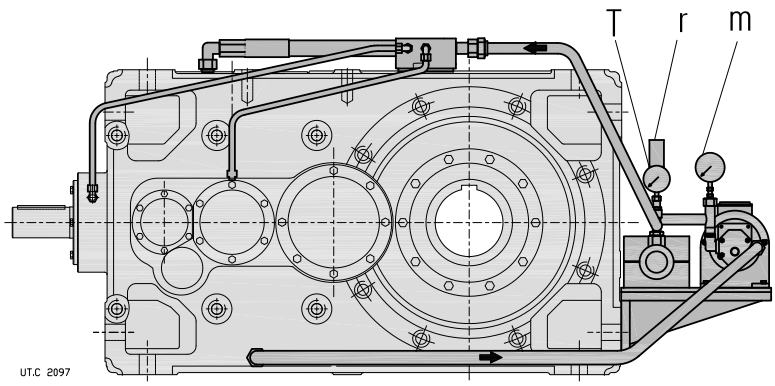

Example of forced lubrication with cooling unit: the exact position of cooling unit depends on the gear reducer size, on train of gears, mounting position and available dimensions: for this reason, on request, a drawing of specific solution is supplied; the pipes are usually realize3d with suction/delivery flexible pipes and with rigid pipes between the flow rate and the bearings.

Page intentionally left blank

25 - Helical gear reducer selection tables

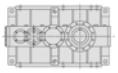

Train of gears	i_N	i	Gear reducer size Nominal output power P_{N2} [hp] - Nominal output speed n_{N2} [rpm] Nominal output torque T_{N2} [klb in]														
			n_1 = **1 800** rpm			n_1 = **1 500** rpm			n_1 = **1 200** rpm			n_1 = **1 000** rpm			n_1 = **90** rpm		
			400	**401**	n_{N2}	**400**	**401**	n_{N2}	**400**	**401**	n_{N2}	**400**	**401**	n_{N2}	**400**	**401**	n_{N2}
2I	10	***9,86***	1980▲ ***684***	2290▲ ***790***	180	1690 ***699***	1950 ***807***	150	1360 ***706***	1570 ***814***	118	1160 ***720***	1330 ***829***	100	115 ***797***	132 ***912***	9
	11,2	***11,2***	1740▲ ***684***	2010▲ ***790***	160	1480 ***699***	1710 ***807***	132	1200 ***706***	1380 ***814***	106	1020 ***720***	1170 ***829***	90	101 ***797***	116 ***912***	8
	12,5	***12,4***	1600 ***698***	1850 ***805***	140	1370 ***713***	1570 ***822***	118	1100 ***720***	1270 ***829***	95	937 ***734***	1080 ***844***	80	91,6 ***797***	105 ***912***	7,1
	14	***14,1***	1410 ***698***	1630 ***805***	132	1200 ***713***	1390 ***822***	106	971 ***720***	1120 ***829***	85	825 ***734***	949 ***844***	71	80,6 ***797***	92,2 ***912***	6,3
	16	***16,3***	1190 ***678***	1370 ***781***	112	1010 ***693***	1170 ***797***	95	819 ***700***	942 ***805***	75	696 ***713***	799 ***819***	63	68 ***774***	77,7 ***885***	5,6
	18	***17,6***	1120 ***692***	1290 ***796***	100	953 ***707***	1090 ***812***	85	770 ***713***	884 ***819***	67	653 ***727***	749 ***834***	56	62,7 ***774***	71,6 ***885***	5
	20	***20,3***	972 ***692***	1120 ***796***	90	827 ***707***	950 ***812***	75	668 ***713***	767 ***819***	60	567 ***727***	650 ***834***	50	54,4 ***774***	62,2 ***885***	4,5
	22,4	***22,5****	827 ***652***	954 ***751***	80	705 ***666***	812 ***768***	67	569 ***673***	656 ***775***	53	483 ***685***	557 ***789***	45	46,3 ***730***	53,4 ***841***	4
3I	25	***25,2***	840 ***741***	965 ***852***	71	714 ***757***	820 ***869***	60	577 ***764***	662 ***876***	47,5	489 ***777***	561 ***891***	40	45,1 ***797***	51,6 ***912***	3,55
	28	***28,7***	739 ***741***	849 ***852***	63	629 ***757***	722 ***869***	53	507 ***764***	582 ***876***	42,5	430 ***777***	493 ***891***	35,5	39,7 ***797***	45,4 ***912***	3,15
	31,5	***31,6***	683 ***755***	784 ***867***	56	581 ***770***	666 ***883***	47,5	469 ***777***	537 ***891***	37,5	398 ***791***	455 ***906***	31,5	36 ***797***	41,2 ***912***	2,8
	35,5	***35,9***	601 ***755***	690 ***867***	50	511 ***770***	586 ***883***	42,5	413 ***777***	473 ***891***	33,5	350 ***791***	401 ***906***	28	31,7 ***797***	36,3 ***912***	2,5
	40	***41,3***	507 ***734***	581 ***841***	45	431 ***749***	494 ***858***	37,5	348 ***756***	398 ***865***	30	295 ***769***	337 ***879***	25	26,8 ***774***	30,6 ***885***	2,24
	45	***45,2***	473 ***748***	541 ***856***	40	402 ***763***	460 ***872***	33,5	324 ***770***	371 ***880***	26,5	272 ***774***	311 ***885***	22,4	24,5 ***774***	28 ***885***	2
	50	***52,1***	410 ***748***	470 ***856***	35,5	349 ***763***	399 ***872***	30	281 ***770***	322 ***880***	23,6	236 ***774***	270 ***885***	20	21,2 ***774***	24,3 ***885***	1,8
	56	***57,4***	379 ***762***	434 ***872***	31,5	321 ***774***	367 ***885***	26,5	257 ***774***	294 ***885***	21,2	214 ***774***	245 ***885***	18	19,3 ***774***	22 ***885***	1,6
	63	***66,2***	329 ***762***	376 ***872***	28	279 ***774***	318 ***885***	23,6	223 ***774***	255 ***885***	19	186 ***774***	212 ***885***	16	16,7 ***774***	19,1 ***885***	1,4
	71	***70,6***	313 ***774***	358 ***885***	25	261 ***774***	298 ***885***	21,2	209 ***774***	239 ***885***	17	174 ***774***	199 ***885***	14	15,7 ***774***	17,9 ***885***	1,25
	80	***81,3***	272 ***774***	311 ***885***	22,4	227 ***774***	259 ***885***	19	181 ***774***	207 ***885***	15	151 ***774***	173 ***885***	12,5	13,6 ***774***	15,5 ***885***	1,12
	90	***88,2***	251 ***774***	286 ***885***	20	209 ***774***	239 ***885***	17	167 ***774***	191 ***885***	13,2	139 ***774***	159 ***885***	11,2	12,5 ***774***	14,3 ***885***	1
	100	***102***	218 ***774***	249 ***885***	18	181 ***774***	207 ***885***	15	145 ***774***	166 ***885***	11,8	121 ***774***	138 ***885***	10	10,9 ***774***	12,4 ***885***	0,9
4I	125	***125***	181 ***797***	207 ***912***	14	151 ***797***	173 ***912***	11,8	121 ***797***	138 ***912***	9,5	101 ***797***	115 ***912***	8	9,06 ***797***	10,4 ***912***	0,71
	160	***159***	143 ***797***	163 ***912***	11,2	119 ***797***	136 ***912***	9,5	95,1 ***797***	109 ***912***	7,5	79,2 ***797***	90,7 ***912***	6,3	7,13 ***797***	8,16 ***912***	0,56
	200	***191***	119 ***797***	136 ***912***	9	99,2 ***797***	114 ***912***	7,5	79,3 ***797***	90,8 ***912***	6	66,1 ***797***	75,7 ***912***	5	5,95 ***797***	6,81 ***912***	0,45
	250	***243***	93,7 ***797***	107 ***912***	7,1	78 ***797***	89,3 ***912***	6	62,4 ***797***	71,5 ***912***	4,75	52 ***797***	59,5 ***912***	4	4,68 ***797***	5,36 ***912***	0,355
	315	***299***	76,2 ***797***	87,2 ***912***	5,6	63,5 ***797***	72,6 ***912***	4,75	50,8 ***797***	58,1 ***912***	3,75	42,3 ***797***	48,4 ***912***	3,15	3,81 ***797***	4,36 ***912***	0,28

* **Finite** transmission ratio.

26 - Dimensions, designs, mounting positions of helical gear reducers

26.1 - R 2I gear reducers

Dimensions 402
Designs (direction of rotation) 402
Mounting positions, plug position, oil quantity 403

26.2 - R 3I gear reducers

Dimensions 404
Designs (direction of rotation) 404
Mounting positions, plug position, oil quantity 405

26.3 - R 4I gear reducers

Dimensions 406
Designs (direction of rotation) 406
Mounting positions, plug position, oil quantity 407

26.1 - R 2I gear reducers

Dimensions

UT.C 024

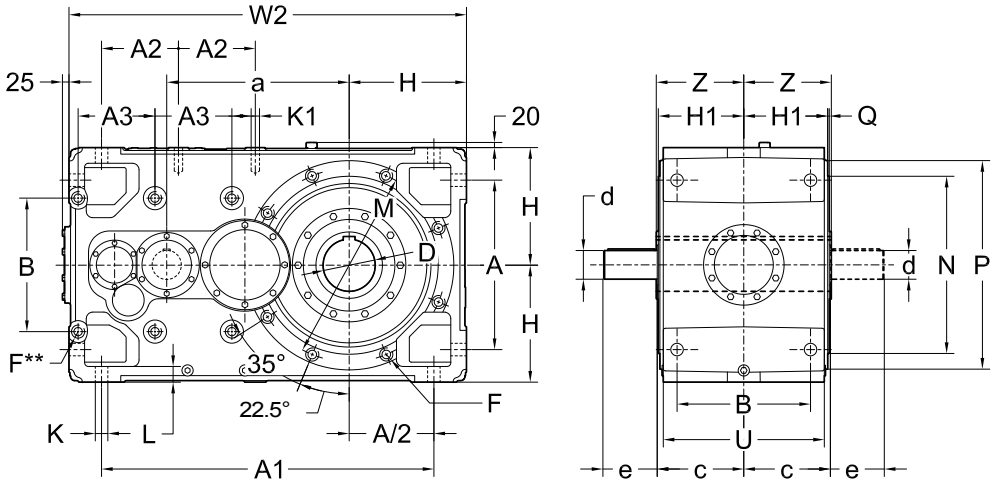

UT.C 025

Size	a	A	A_1	A_2	A_3	B	c	D Ø H7	d Ø m6	e	F 1)	H h11	H_1	K Ø	K_1 1)	L	M	N h6	P	Q	U	W_2 2)	Z	lb
400, 401	700	650	1275	295	295	512	330	200	$i_N \leq 11.2$ 110 / $i_N \geq 12.5$ 90	210 / 170	M36	450	322	48	M36	65	740	680	800	6	618	1525	330	4965

Designs (direction of rotation)

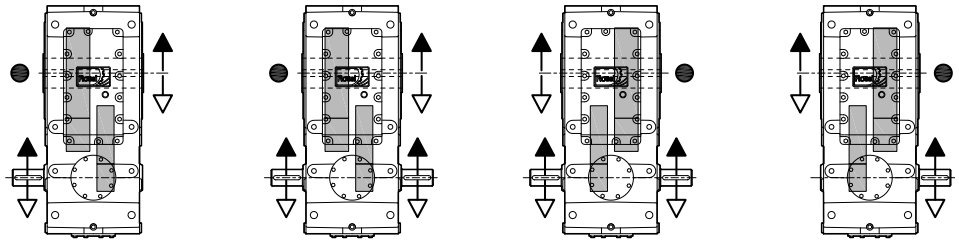

UP2A UP2D UP2M UP2L

UT.C 026

** Machined surface and No. 6 threaded holes (on opposite side not in view as well).
1) Working length of thread 1,7 · F.
2) For mounting positions B6, B7, V5, V6, dimension **W_2** increases by 20 for overall dimensions of filler plug.
● Position of the low speed wheel for radial load verification.

26 - Dimensions, designs, mounting positions of helical gear reducers

26.1 - R 2I gear reducers

Mounting positions, plug position, oil quantity

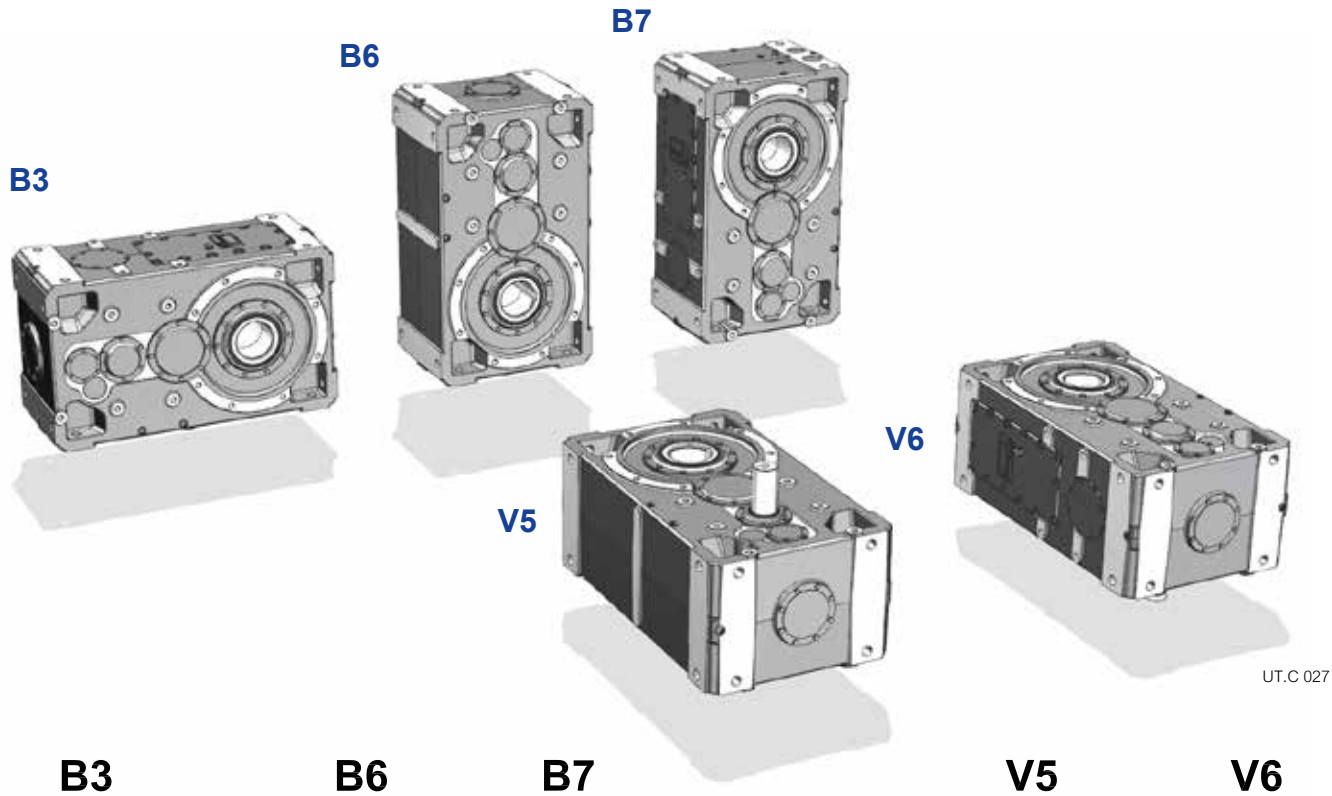

B3 **B6** **B7** **V5** **V6**

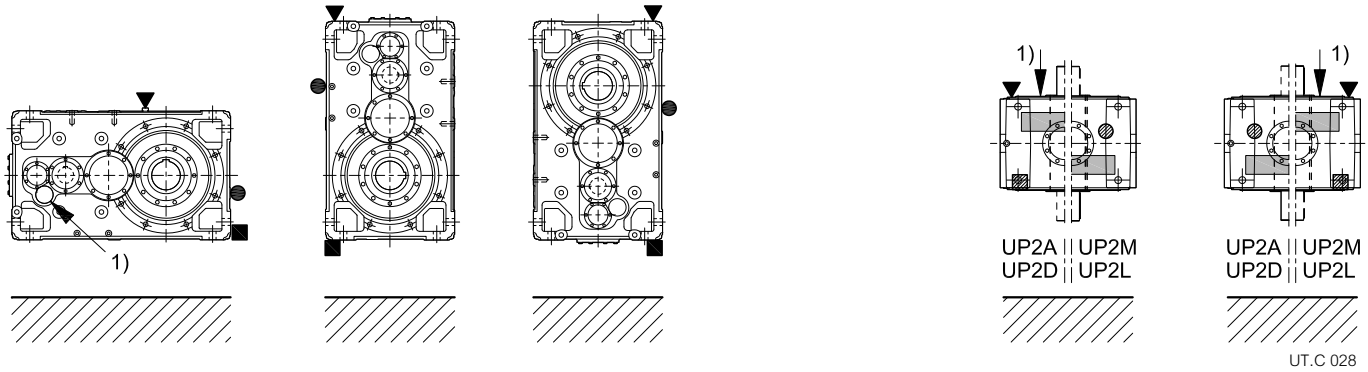

Size	Oil quantity [gal]				
	B3	B6	B7	V5, V6	
				with low speed shaft below	with upper low speed wheel
400, 401	48	61	59	83	86

Possible high oil splash: for the corrective factor f_{t_3} of nominal thermal power P_{t_N} see ch. 22.

Possible bearing lubrication pump: consult us if need be.

1) Position of intermediate shaft for the mounting position identification; for mounting positions V5 and V6 it is possible to use the **position of low speed wheel** (s. also «Designs» on previous page).

▼ Oil filler plug
● Oil level plug
■ Oil drain plug

▽ Oil filler plug on opposite side (not in view)
▨ Oil level plug on opposite side (not in view)
⊘ Oil drain plug on opposite side (not in view)

26.2 - R 3I gear reducers

Dimensions

UT.C 029

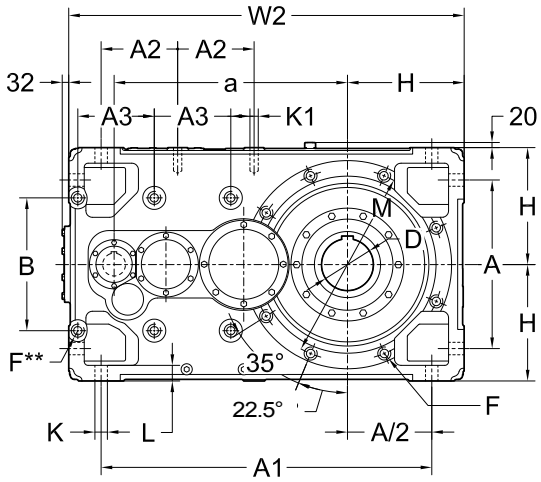

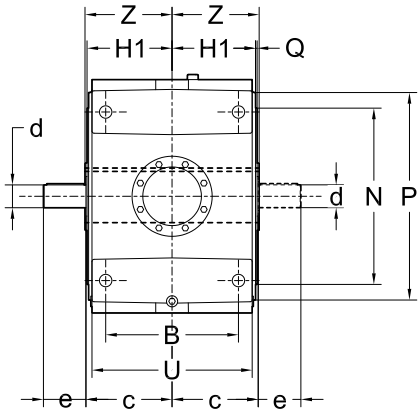

UT.C 030

Size	a	A	A_1	A_2	A_3	B	c	D Ø H7	d Ø m6	e	F 1)	H h11	H_1	K Ø	K_1 1)	L	M	N h6	P	Q	U	W_2 2)	Z	lb
400, 401	900	650	1275	295	295	512	330	200	$i_N \leqslant 50$: 80 | $i_N \geqslant 56$: 65	$i_N \leqslant 50$: 170 | $i_N \geqslant 56$: 140	M36	450	322	48	M36	65	740	680	800	6	618	1525	330	5072

Designs (direction of rotation)

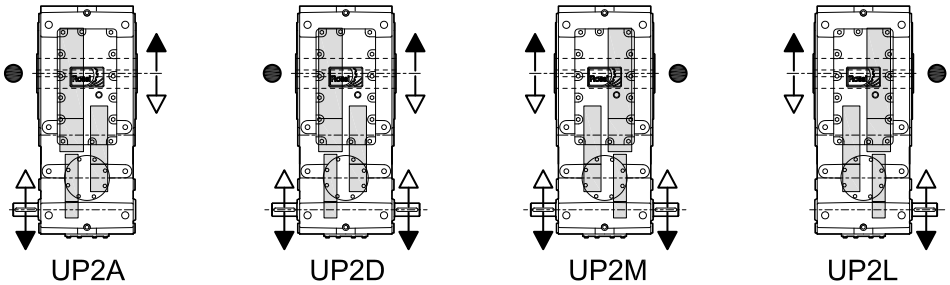

UT.C 031

** Machined surface and No. 6 threaded holes (on opposite side not in view as well).
1) Working length of thread 1,7 · F.
2) For mounting positions B6, B7, V5, V6, dimension W_2 increases by 20 for overall dimensions of filler plug.
● Position of the low speed wheel for radial load verification.

26.2 - Gear reducers R 3I

Mounting positions, plug position, oil quantity

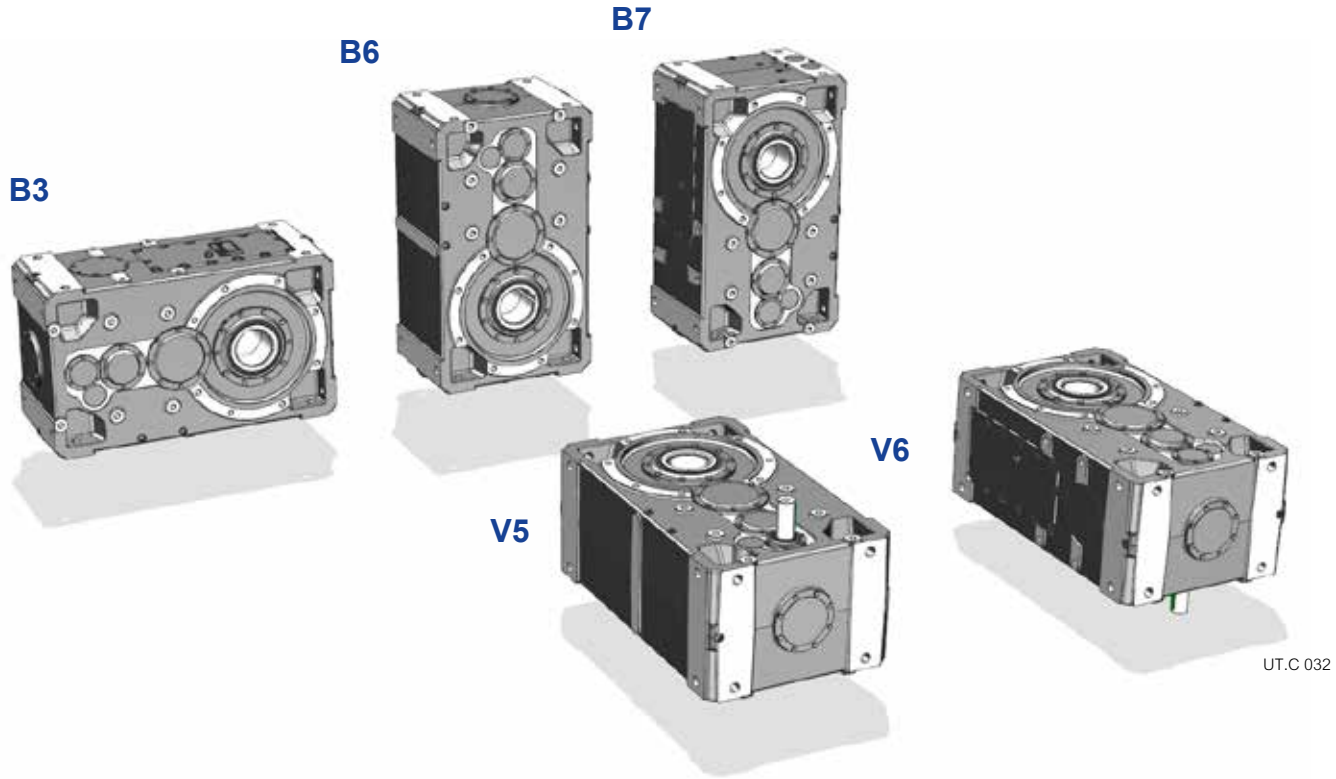

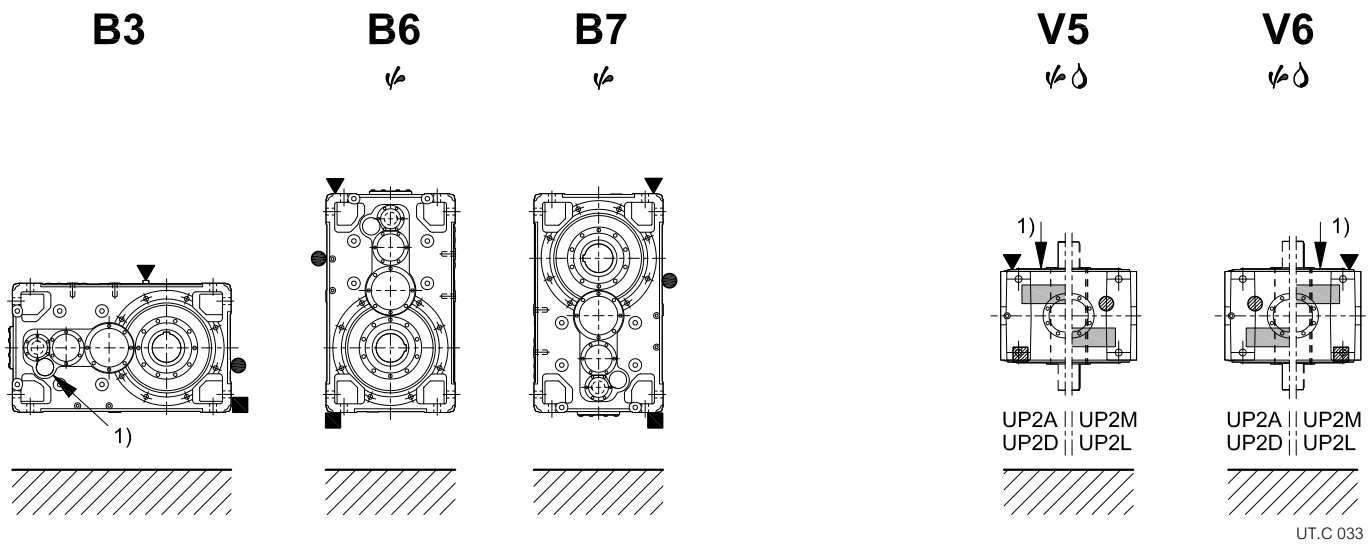

Size	Oil quantity [gal]				
	B3	B6	B7	V5, V6	
				with low speed shaft below	with upper low speed wheel
400, 401	48	61	59	83	86

Possible high oil splash: for the corrective factor f_{t3} of nominal thermal power P_{tN} see ch. 22.

Possible bearing lubrication pump: consult us if need be.

1) Position of intermediate shaft for the mounting position identification; for mounting positions V5 and V6 it is possible to use the **position of low speed wheel** (s. also «Designs» on previous page).

▼ Oil filler plug
● Oil level plug
■ Oil drain plug

▽ Oil filler plug on opposite side (not in view)
▨ Oil level plug on opposite side (not in view)
⊘ Oil drain plug on opposite side (not in view)

26.3 - R 4I gear reducers

Dimensions

UT.C 034

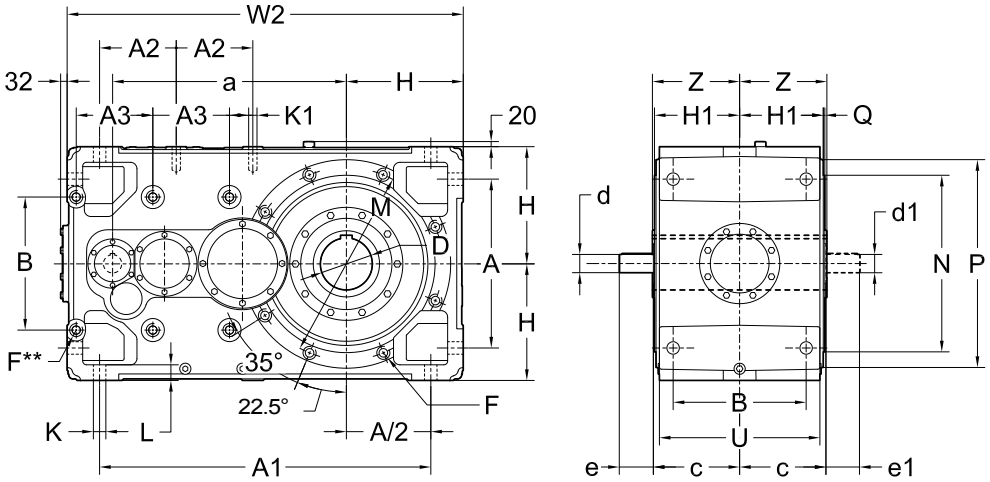

UT.C 035

Size	a	A	A_1	A_2	A_3	B	c	D Ø H7	d Ø m6	e	d_1 Ø m6	e_1	F 1)	H h11	H_1	K Ø	K_1 1)	L	M	N h6	P	Q	U	W_2 2)	Z	lb
400, 401	900	650	1275	295	295	512	330	200	$i_N \leq 160$ 55 | $i_N \geq 200$ 48	110 | 110	48	110	M36	450	322	48	M36	65	740	680	800	6	618	1525	330	5030

Designs (direction of rotation)

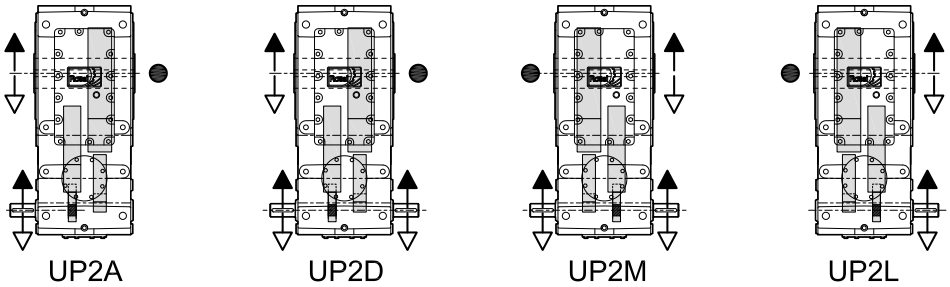

UT.C 036

** Machined surface and No. 6 threaded holes (on opposite side not in view as well).
1) Working length of thread 1,7 · F.
2) For mounting positions B6, B7, V5, V6, dimension W_2 increases by 20 for overall dimensions of filler plug.
● Position of the low speed wheel for radial load verification.

26.3 - Gear reducers R 4I

Mounting positions, plug position, oil quantity

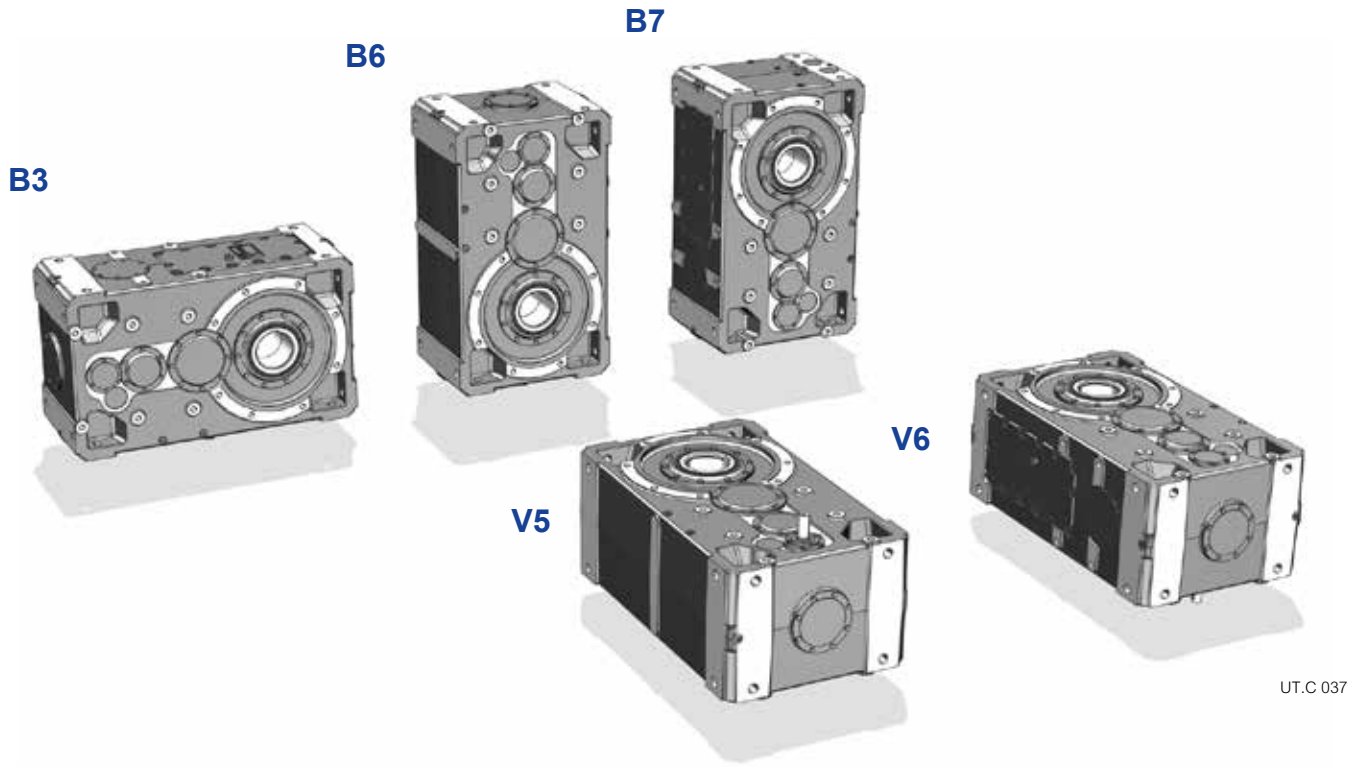

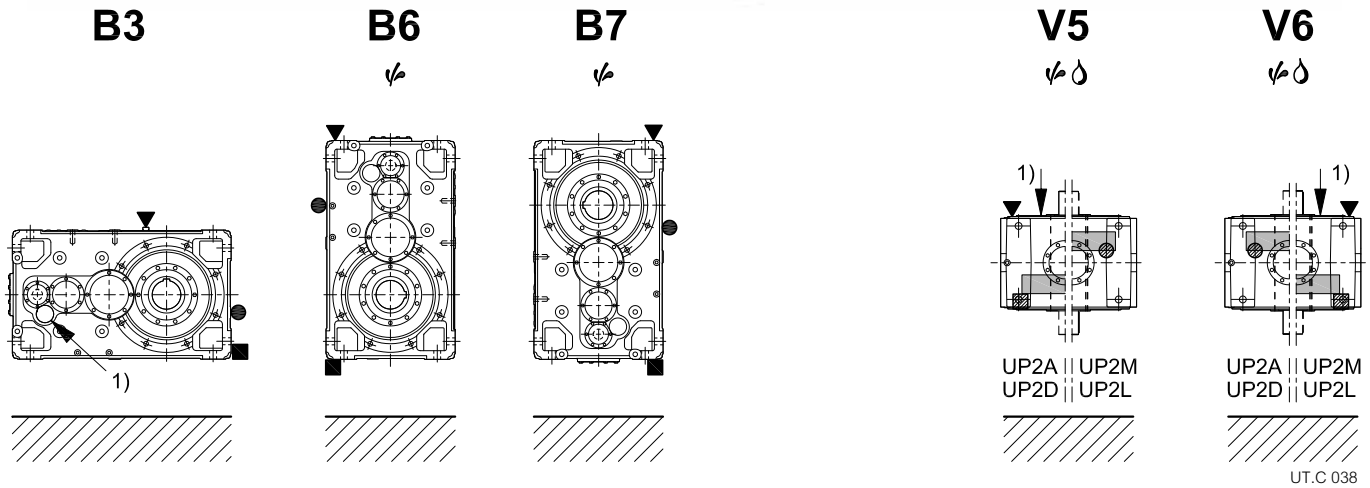

Size	Oil quantity [gal]				
	B3	B6	B7	V5, V6	
				with low speed shaft below	with upper low speed wheel
400, 401	48	61	59	83	86

Possible high oil splash: for the corrective factor f_{t_3} of nominal thermal power P_{t_N} see ch. 22.

Possible bearing lubrication pump: consult us if need be.

1) Position of intermediate shaft for the mounting position identification; for mounting positions V5 and V6 it is possible to use the **position of low speed wheel** (s. also «Designs» on previous page).

▼ Oil filler plug
● Oil level plug
■ Oil drain plug

▽ Oil filler plug on opposite side (not in view)
▨ Oil level plug on opposite side (not in view)
⊘ Oil drain plug on opposite side (not in view)

Page intentionally left blank

27 - Bevel helical gear reducer selection tables

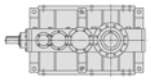

Train of gears	i_N	i	Gear reducer size Nominal output power P_{N2} [hp] - Nominal output speed n_{N2} [rpm] Nominal output torque T_{N2} [klb in]														
			n_1 = 1 800 rpm			n_1 = 1 500 rpm			n_1 = 1 200 rpm			n_1 = 1 000 rpm			n_1 = 90 rpm		
			400	401	n_{N2}	400	401	n_{N2}	400	401	n_{N2}	400	401	n_{N2}	400	401	n_{N2}
C2I	20	19,7	1050▲ 726	1210▲ 836	90	895▲ 742	1030▲ 852	75	722 749	830 860	60	613 762	703 875	50	57,7 797	66 912	4,5
	22,4	22,4	925▲ 726	1060▲ 836	80	787▲ 742	905▲ 852	67	636 749	730 860	53	539 762	619 875	45	50,7 797	58,1 912	4
	25	25,8	780▲ 706	897▲ 811	71	664▲ 721	762▲ 827	60	536 728	615 835	47,5	455 741	521 849	40	42,8 774	48,9 885	3,55
	28	28	733▲ 719	841▲ 825	63	624 734	715 842	53	503 741	577 849	42,5	427 754	489 863	35,5	39,5 774	45,1 885	3,15
	31,5	32,3	636▲ 719	730▲ 825	56	541 734	620 842	47,5	437 741	501 849	37,5	371 754	424 863	31,5	34,2 774	39,1 885	2,8
	35,5	35,3	593▲ 733	680▲ 840	50	504 748	578 857	42,5	407 755	466 864	33,5	345 768	395 878	28	31,3 774	35,8 885	2,5
	40	40,7	515▲ 733	590▲ 840	45	438 748	501 857	37,5	353 755	404 864	30	300 768	343 878	25	27,2 774	31,1 885	2,24
	45	44,5	479 747	549 855	40	407 762	466 872	33,5	329 769	376 879	26,5	276 774	315 885	22,4	24,8 774	28,4 885	2
	50	51,3	416 747	476 855	35,5	353 762	404 872	30	285 769	326 879	23,6	239 774	274 885	20	21,6 774	24,6 885	1,8
	56	56,5	385 761	440 871	31,5	326 774	373 885	26,5	261 774	298 885	21,2	218 774	249 885	18	19,6 774	22,4 885	1,6
	63	65,1	334 761	382 871	28	283 774	324 885	23,6	227 774	259 885	19	189 774	216 885	16	17 774	19,4 885	1,4
	71	70,6	313 774	358 885	25	261 774	298 885	21,2	209 774	239 885	17	174 774	199 885	14	15,7 774	17,9 885	1,25
	80	81,3	272 774	311 885	22,4	227 774	259 885	19	181 774	207 885	15	151 774	173 885	12,5	13,6 774	15,5 885	1,12
	90	88,2	251 774	286 885	20	209 774	239 885	17	167 774	191 885	13,2	139 774	159 885	11,2	12,5 774	14,3 885	1
	100	102	218 774	249 885	18	181 774	207 885	15	145 774	166 885	11,8	121 774	138 885	10	10,9 774	12,4 885	0,9
C3I	125	130	170 774	194 885	14	142 774	162 885	11,8	113 774	129 885	9,5	94,4 774	108 885	8	8,5 774	9,71 885	0,71
	160	164	135 774	154 885	11,2	112 774	128 885	9,5	89,8 774	103 885	7,5	74,8 774	85,5 885	6,3	6,74 774	7,7 885	0,56
	200	209	106 774	121 885	9	88,3 774	101 885	7,5	70,7 774	80,8 885	6	58,9 774	67,3 885	5	5,3 774	6,06 885	0,45
	250	265	83,6 774	95,5 885	7,1	69,7 774	79,6 885	6	55,7 774	63,7 885	4,75	46,4 774	53,1 885	4	4,18 774	4,78 885	0,355
	315	325	68 774	77,7 885	5,6	56,7 774	64,7 885	4,75	45,3 774	51,8 885	3,75	37,8 774	43,2 885	3,15	3,4 774	3,88 885	0,28

▲ Necessary forced lubrication with motor pump and possible heat exchanger (see ch. 24 and ch. 30).

28 - Dimensions, designs, mounting positions of bevel helical gear reducers

28.1 - R C2I gear reducers

Dimensions 412
Designs (direction of rotation) 412
Mounting positions, plug position, oil quantity 413

28.2 - R C3I gear reducers

Dimensions 414
Designs (direction of rotation) 414
Mounting positions, plug position, oil quantity 415

28.1 - R C2I gear reducers

Dimensions

UT.C 040

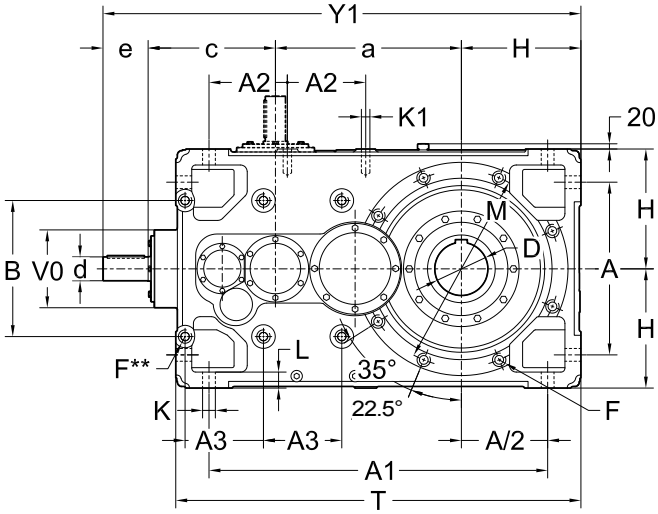

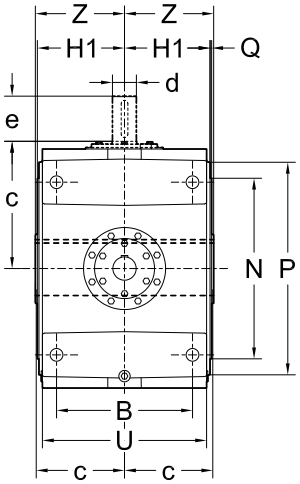

UT.C 041

Size	a	A	A_1	A_2	A_3	B	c	D Ø H7	d Ø m6	e	Y_1 2)	F 1)	H h11	H_1	K Ø	K_1 1)	L	M	N h6	P	Q	T 2)	U	V_0	Z	lb
400, 401	700	650	1275	295	295	512	480	200	90	$i_N \leq 40$ 170	1800	M36	450	322	48	M36	65	740	680	800	6	1525	618	293	330	5450
									70	$i_N \geq 45$ 140	1770															

Designs (direction of rotation)

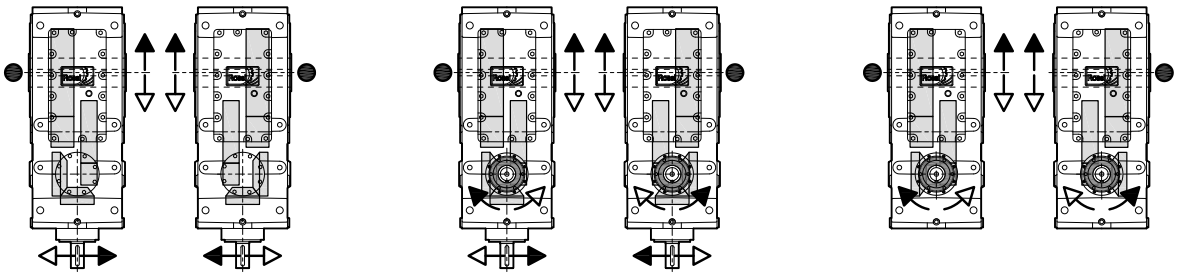

UT.C 042

** Machined surface and No. 6 threaded holes (on opposite side not in view as well).
1) Working length of thread 1,7 · F.
2) For mounting positions B6, B7, V5, V6 dimension $\mathbf{Y}_1$ and **T** increase by 20 for overall dimensions of filler plug.
• Position of the low speed wheel for radial load verification.

28 - Dimensions, designs, mounting positions of bevel helical gear reducers

28.1 - R C2I gear reducers

Mounting positions, plug position, oil quantity

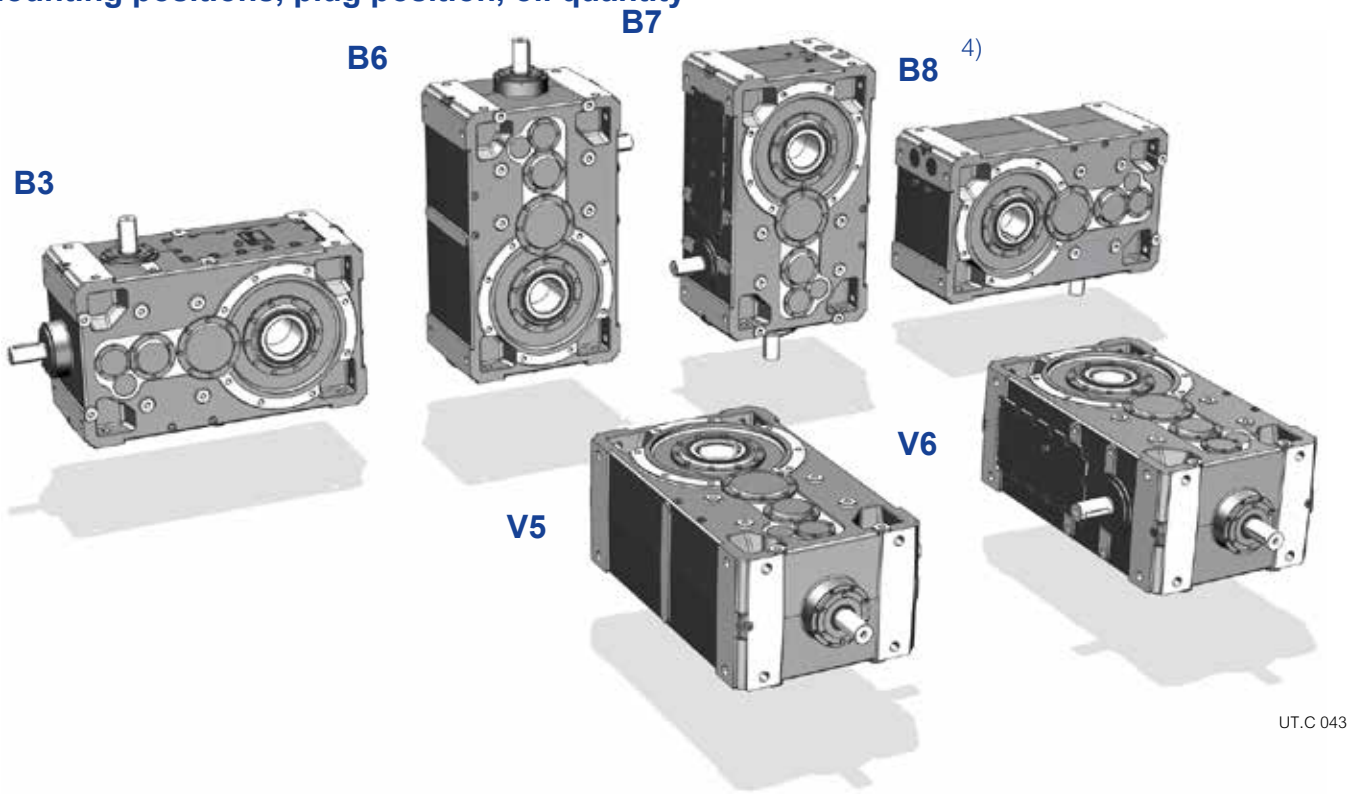

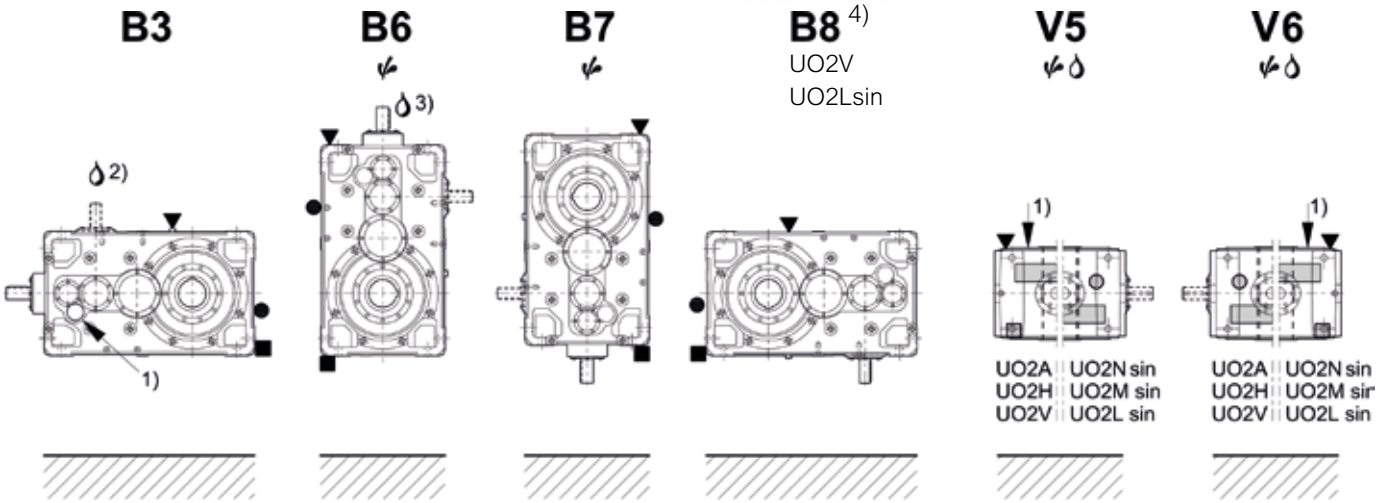

Size	Oil quantity [gal]					
	B3	B6	B7	B8	V5, V6	
					with low speed shaft below	with upper low speed wheel
400, 401	48	61	59	48	83	86

- Possible high oil splash: for the corrective factor f_{t_3} of nominal thermal power P_{t_N} see ch. 22.
- Possible bearing lubrication pump: consult us if need be.

1) Position of intermediate shaft for the mounting position identification; for mounting positions V5 and V6 it is possible to use the **position of low speed wheel** (s. also «Designs» on previous page).
2) for designs UO2H, UO2M sin, UO2V, UO2L sin.
3) for designs UO2A, UO2N sin, UO2H, UO2M sin.
4) Mounting postion B8 available only for designs UO2V, UO2Lsin.

- ▼ Oil filler plug
- ● Oil level plug
- ■ Oil drain plug

- ▽ Oil filler plug on opposite side (not in view)
- ▨ Oil level plug on opposite side (not in view)
- ⊘ Oil drain plug on opposite side (not in view)

28.2 - R C3I gear reducers

Dimensions

UT.C 045

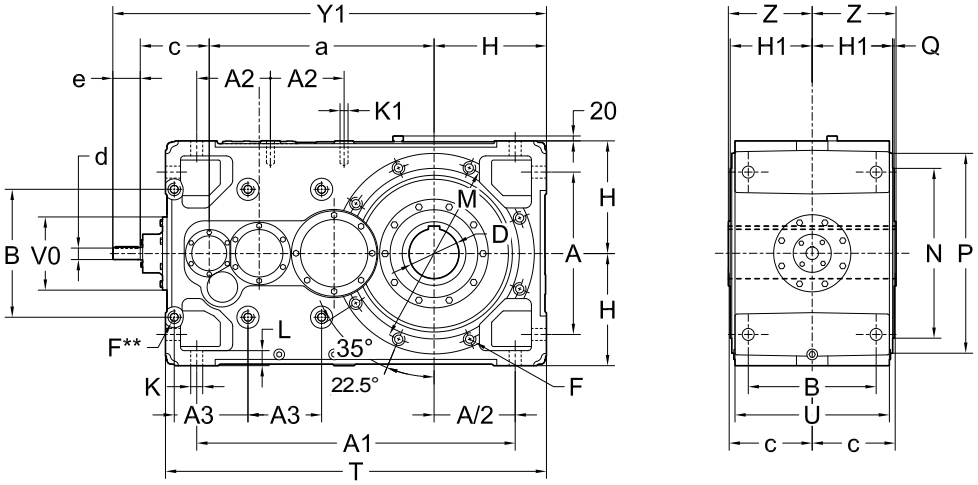

UT.C 046

Size	a	A	A_1	A_2	A_3	B	c	D Ø H7	d Ø m6	e	Y_1 2)	F 1)	H h11	H_1	K Ø	K_1 1)	L	M	N h6	P	Q	T 2)	U	V_0	Z	lb
400, 401	900	650	1275	295	295	512	330	200	48 38	$i_N \leq 200$ 110 $i_N \geq 250$ 80	1742 1712	M36	450	322	48	M36	65	740	680	800	6	1525	618	293	330	5558

Designs (direction of rotation)

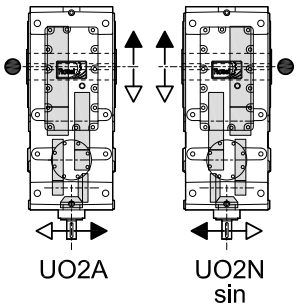

UT.C 047

** Machined surface and No. 6 threaded holes (on opposite side not in view as well).
1) Working length of thread 1,7 · F.
2) For mounting positions B6, B7, V5, V6 dimension $\mathbf{Y_1}$ and **T** increase by 20 for overall dimensions of filler plug.
• Position of the low speed wheel for radial load verification.

28.2 - R C3I gear reducers

Mounting positions, plug position, oil quantity

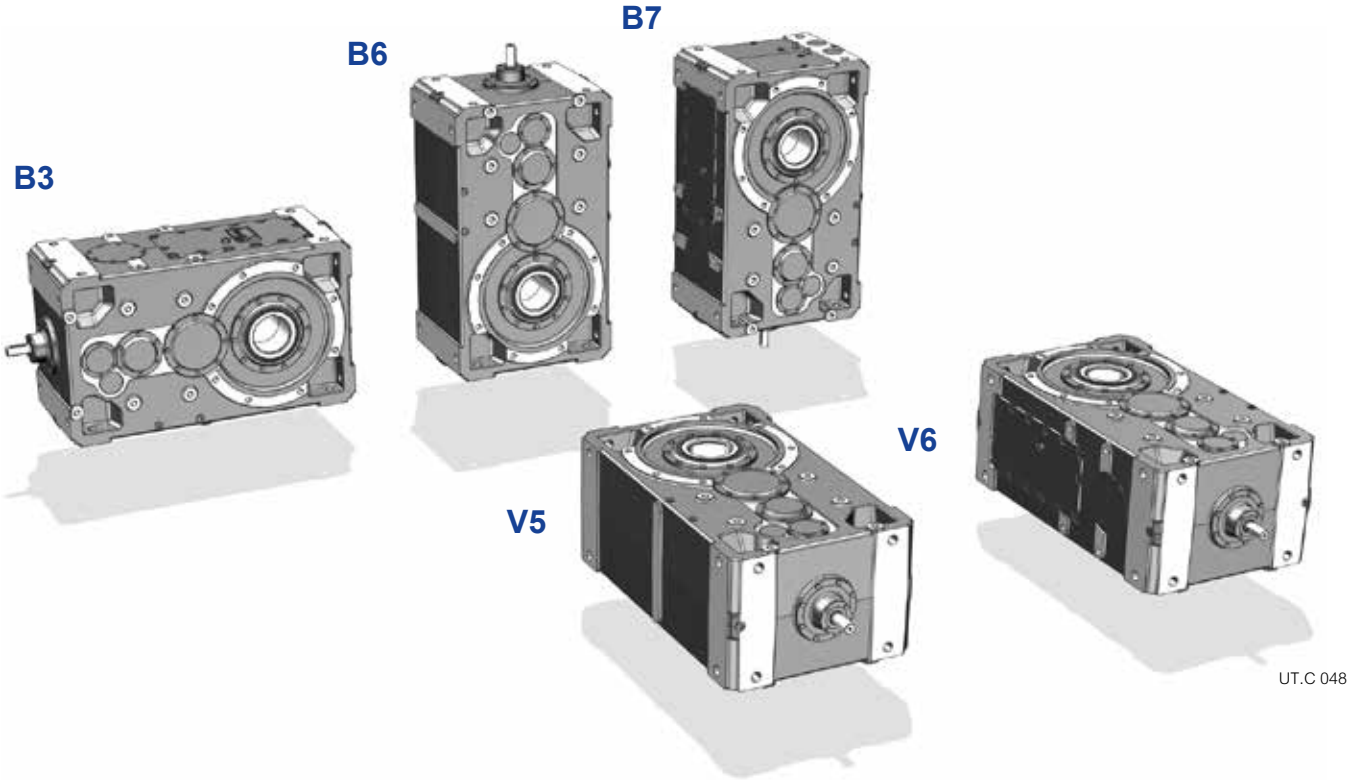

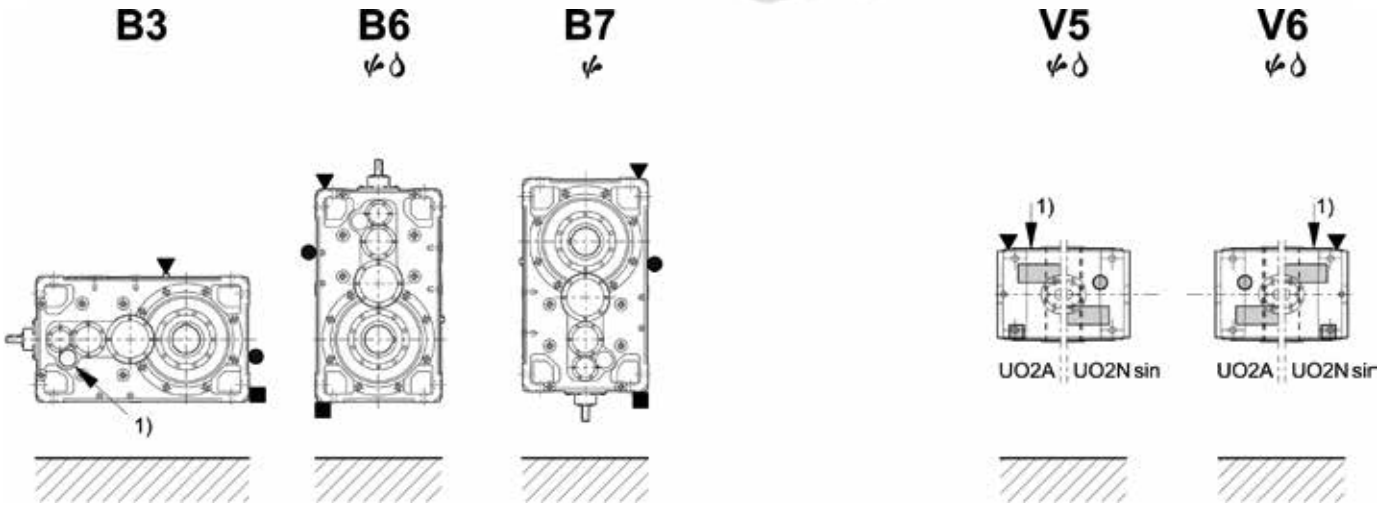

Size	Oil quantity [gal]					
	B3	B6	B7	B8	V5, V6 with low speed shaft below	V5, V6 with upper low speed wheel
400, 401	48	61	59	48	83	86

Possible high oil splash: for the corrective factor f_{t3} of nominal thermal power P_{tN} see ch. 22.

Possible bearing lubrication pump: consult us if need be.

1) Position of intermediate shaft for the mounting position identification; for mounting positions V5 and V6 it is possible to use the **position of low speed wheel** (s. also «Designs» on previous page).

▼ Oil filler plug
● Oil level plug
■ Oil drain plug

▽ Oil filler plug on opposite side (not in view)
▨ Oil level plug on opposite side (not in view)
⊘ Oil drain plug on opposite side (not in view)

Page intentionally left blank

29 - Radial loads

29.1 - Radial loads F_{r1} [lb] on high speed shaft

Radial loads generated on the shaft end by a drive connecting gear reducer and motor must be less than or equal to those given in the relevant table.

n_1	F_{r1} [lb]		
rpm	**2I**	**3I, C2I**	**4I, C3I**
1 800	4500	2800	1120
1 500	4750	3000	1180
1 200	5000	3150	1250
1 000	5300	3350	1320
710	6000	3750	1500
560	6300	4000	1600
450	6700	4250	1700
355	7500	4750	1900
F_{r1max}	**7500**	**4750**	**1900**

The radial load F_{r1} given by the following formula refers to most common:

$$F_{r1} = \frac{189\,090 \cdot P_1}{d \cdot n_1}$$ [lb] for timing belt drive

$$F_{r1} = \frac{315\,150 \cdot P_1}{d \cdot n_1}$$ [lb] for V-belt drive

where:
P_1 [hp] is the power required at the input side of gear reducer;
n_1 [rpm] is the speed;
d [in] is the pitch diameter.

Radial loads given in the table are valid for overhung loads on centre line of high speed shaft end, i.e. operating at a distance of 0,5 · e (e = shaft end length) from the shoulder. If radial loads are in a different position, i.e. at a distance differing from 0,5 e from shoulder, multiply the admissible radial load value by 1,25 (without exceeding the maximum value F_{r1max}, stated in the table) if acting at 0,315 · e; by 0,8 if acting at 0,8 · e .

It is always advisable **to mount the pulley against the shaft shoulder** and in any case to avoid that the pulley exceeds the shaft end.

An **axial load** of up to 0,2 times the value in the table is permissible, simultaneously with the radial load.

In absence of the radial load, an axial load may be acting on center line, not higher than 0,5 times the stated radial load.

IMPORTANT: tabulated values for radial load F_{r1} can increase considerably in certain instances (direction of rotation, angular position of load, etc.). If necessary and/or in presence of **misaligned** axial loads, consult us.

29.1 - Radial loads F_{r1} [lb] on high speed shaft end

V-belt drives

See the table for the driving pulleys advised for the various powers and motor polarities and the radial loads resulting on motor and gear reducer shaft ends.

The transmissions have been calculated with a service factor ⩾1,4; replace section SPA with SPB, section SPB with SPC, section SPC with 8V, in order to increase the service factor with the same ***d*** and belt number.

The radial loads have been calculated according to the formula: $(315\ 150 \cdot P_1) / (d \cdot n_1)$.

The radial load F_{r1}, referring to the selected motor pulley, must be lower than or equal to the one admitted by gear reducer.

IMPORTANT. For the good running of drive and in order not to overload motor and gear reducer bearings, reduce the overhung to a minimum and do not stress belts excessively. Pulleys with d ⩾ 16 must be dynamically balanced.

Motor			Motor pulley: belt number and section, pitch diameter ***d*** [in], radial load F_{r1} [lb]														
P_1 hp	Size and pole n.			***d***	F_{r1} ≈		***d***	F_{r1} ≈		***d***	F_{r1} ≈		***d***	F_{r1} ≈		***d***	F_{r1} ≈
1,5	80B	2	2 Z	**2.8**	50	2 Z	**3.15**	45	2 Z	**3.55**	40	1 Z	**4**	36	1 Z	**4.5**	32
	90S	4	2 A	**3.55**	80	2 A	**4**	71	2 A	**4.5**	63	1 A	**5**	56	1 A	**5.6**	50
	90L	6	2 A	**3.55**	118	2 A	**4**	100	2 A	**4.5**	90	2 A	**5**	80	1 A	**5.6**	75
2	90S	2	2 A	**3.55**	53	2 A	**4**	48	1 A	**4.5**	40	1 A	**5**	38	1 A	**5.6**	34
	90L	4	2 A	**3.55**	106	2 A	**4**	95	2 A	**4.5**	80	2 A	**5**	75	1 A	**5.6**	67
	100LA	6	3 A	**3.55**	150	3 A	**4**	140	2 A	**4.5**	118	2 A	**5**	112	2 A	**5.6**	100
3	90LA	2	2 A	**3.55**	80	2 A	**4**	71	2 A	**4.5**	63	2 A	**5**	56	1 A	**5.6**	50
	100LA	4	3 A	**3.55**	160	3 A	**4**	140	3 A	**4.5**	125	2 A	**5**	112	2 A	**5.6**	100
	112M	6	3 A	**4.5**	180	3 A	**5**	160	3 A	**5.6**	150	2 A	**6.3**	132	2 A	**7.1**	118
4	100LA	2	3 A	**3.55**	106	3 A	**4**	95	2 A	**4.5**	80	2 A	**5**	75	2 A	**5.6**	67
	100LB	4	3 A	**4.5**	160	3 A	**5**	150	2 A	**5.6**	132	2 A	**6.3**	118	2 A	**7.1**	106
	132S	6	3 SPA	**4**	280	3 SPA	**4.5**	250	2 SPA	**5**	224	2 SPA	**5.6**	200	2 SPA	**6.3**	170
5.4	112M	2	3 A	**4**	125	3 A	**4.5**	112	2 A	**5**	100	2 A	**5.6**	90	2 A	**6.3**	80
	112M	4	3 A	**5**	200	3 A	**5.6**	180	3 A	**6.3**	160	2 A	**7.1**	140	2 A	**8**	125
	132M	6	3 SPA	**4.5**	335	3 SPA	**5**	300	2 SPA	**5.6**	265	2 SPA	**6.3**	236	2 SPA	**7.1**	212
7.5	132S	2	3 SPA	**4**	170	3 SPA	**4.5**	150	2 SPA	**5**	140	2 SPA	**5.6**	125	2 SPA	**6.3**	112
	132S	4	3 SPA	**4.5**	315	3 SPA	**5**	400	2 SPA	**5.6**	250	2 SPA	**6.3**	224	2 SPA	**7.1**	200
	132MB	6	3 SPA	**5.6**	375	3 SPA	**6.3**	335	2 SPA	**7.1**	280	2 SPA	**8**	250	2 SPA	**9**	224
10	132SB (SC)	2	3 SPA	**4.5**	250	3 SPA	**5**	224	2 SPA	**5.6**	200	2 SPA	**6.3**	180	2 SPA	**7.1**	132
(12.4)	132M (MB)	4	3 SPA	**5**	375	3 SPA	**5.6**	400	2 SPA	**6.3**	335	2 SPA	**7.1**	315	2 SPA	**8**	280
	160M	6	3 SPA	**6.3**	425	3 SPA	**7.1**	375	3 SPA	**8**	335	2 SPA	**9**	300	2 SPA	**10**	280
15	160MR	2	3 SPA	**5**	280	3 SPA	**5.6**	250	2 SPA	**6.3**	224	2 SPA	**7.1**	200	2 SPA	**8**	170
	160M	4	3 SPA	**6.3**	450	3 SPA	**7.1**	400	3 SPA	**8**	355	2	**9**	315	2 SPA	**10**	280
	160L	6	3 SPA	**8**	500	3 SPA	**9**	450	3 SPA	**10**	400	2	**11.2**	375	2 SPA	**12.5**	335
20	160M	2	3 SPA	**5.6**	335	3 SPA	**6.3**	300	3 SPA	**7.1**	265	2 SPA	**8**	236	2 SPA	**9**	200
	160L	4	3 SPA	**7.1**	530	3 SPA	**8**	475	3 SPA	**9**	400	3 SPA	**10**	375	2 SPA	**11.2**	335
	180L	6	4 SPA	**8**	670	4 SPA	**9**	600	4 SPA	**10**	560	3 SPA	**11.2**	500	3 SPA	**12.5**	450
25	160L	2	3 SPA	**6.3**	375	3 SPA	**7.1**	335	3 SPA	**8**	280	3 SPA	**9**	265	2 SPA	**10**	236
	180M	4	4 SPA	**7.1**	670	4 SPA	**8**	560	4 SPA	**9**	500	3 SPA	**10**	475	3 SPA	**11.2**	425
	200LR	6	4 SPB	**8**	850	4 SPB	**9**	750	3 SPB	**10**	670	3 SPB	**11.2**	600	3 SPB	**12.5**	560
30	180L	4	4 SPA	**8**	710	4 SPA	**9**	630	4 SPA	**10**	560	3 SPA	**11.2**	500	3 SPA	**12.5**	450
	200L	6	4 SPB	**9**	900	4 SPB	**10**	800	3 SPB	**11.2**	750	3 SPB	**12.5**	670	3 SPB	**14**	600
40	200L	4	4 SPB	**9**	800	4 SPB	**10**	750	3 SPB	**11.2**	670	3 SPB	**12.5**	600	3 SPB	**14**	530
	225M	6	5 SPB	**10**	1120	5 SPB	**11.2**	1000	4 SPB	**12.5**	900	4 SPB	**14**	800	4 SPB	**16**	670
50	225S	4	5 SPB	**9**	1000	5 SPB	**10**	950	4 SPB	**11.2**	850	4 SPB	**12.5**	750	4 SPB	**14**	670
	250M	6	6 SPB	**10**	1400	6 SPB	**11.2**	1250	5 SPB	**12.5**	1120	5 SPB	**14**	1000	5 SPB	**16**	850
60	225M	4	5 SPB	**10**	1120	5 SPB	**11.2**	1000	4 SPB	**12.5**	900	4 SPB	**14**	800	4 SPB	**16**	710
75	250M	4	6 SPB	**10**	1400	6 SPB	**11.2**	1250	5 SPB	**12.5**	1120	5 SPB	**14**	1000	5 SPB	**16**	850
100	280S	4	6 SPB	**11.2**	1700	5 SPB	**12.5**	1500	5 SPB	**14**	1320	5 SPB	**16**	1180	–	–	–
125	280M	4	6 SPB	**12.5**	1900	5 SPC	**12.5**	1900	5 SPC	**14**	1700	4 SPC	**16**	1400	–	–	–
150	315S	4	6 SPC	**12.5**	2240	5 SPC	**14**	2000	4 SPC	**16**	1700	–	–	–	–	–	–
175	315M	4	6 SPC	**14**	2360	5 SPC	**16**	2000	4 SPC	**18**	1800	–	–	–	–	–	–
200	315MC	4	6 SPC	**16**	2360	6 SPC	**18**	2000	5 8V	**18**	2000	–	–	–	–	–	–

1) Not valid for power 12.4 hp: d ⩾ 4.5 in.

Note: Pulley band width: **1 Z** 16, **2 Z** 28, **1A** 20, **2 A-2 SPA** 35, **3 A-3 SPA** 50, **4 SPA** 65, **3 SPB** 63, **4 SPB** 82, **5 SPB** 101, **6 SPB** 120, **4 SPC** 110, **5 SPC** 136, **6 SPC** 162, **5 8V** 152.

29.2 - Axial loads F_{a2} [lb] or radial loads F_{r2} [lb] on low speed shaft end

Axial loads F_{a2}

Permissible F_{a2} is shown in the column where direction of rotation of low speed shaft (black or white arrow) and direction of the axial force (solid or broken arrow) correspond to those of the gear reducer in question. Direction of rotation and direction of axial force may be established viewing the gear reducer from any point of the two output sides of low speed shaft, providing the same point is adopted for rotation and axial load (see fig. below).

Notes:

- White and black arrows of present chapter do not refer to the ones stating the correspondence of direction of rotation for the different designs (see ch. 26, 28);
- Wherever possible, choose the load conditions corresponding to the column with highest admissible values.
- Values stated in the table are valid for the center line axial load; in the event of a misaligned axial load, consult us.

Radial loads F_{r2}

Radial loads generated on the shaft end by a drive connecting gear reducer and machine must be less than or equal to those given in the relevant tables in the following pages.

Normally, radial loads on low speed shaft ends are considerable: in fact there is a tendency to connect the gear reducer to the machine by means of a transmission with high transmission ratio (economizing on the gear reducer) and with small diameters (economizing on the drive, and for requirements dictated by overall dimensions). Bearing life and wear (which also affect gears unfavourably) and low speed shaft strength, clearly impose limits on permissible radial load.

IMPORTANT. Permissible radial loads given in the tables are valid for design with one-extension **solid low speed shaft;** for hollow low speed shaft or solid double extension low speed shaft, consult us.

Permissible radial loads given in the tables are therefore based on: the low speed shaft side where radial load is applied according to low speed wheel position (see ch. 26 and 28), the product of speed n_2 [min^{-1}] for the bearing duration L_h [h] required, the direction of rotation, the angular position φ [°] the load and torque T_2 [lbf in] required.

Permissible radial loads given in the tables are valid for overhung loads on center line of high speed shaft end, i.e. operating at a distance of 0,5 · E (E = shaft end length) from the shoulder. If radial loads are in a different position, i.e. at a distance differing from 0,5 · E from shoulder, re-calculate the permissible value of radial load according to the following formula, trying not to exceed the maximum value F_{r2max}, stated in the tables:

$$F_{r2}' = F_{r2} \cdot \frac{E/2 + y}{x + y} \quad [lb]$$

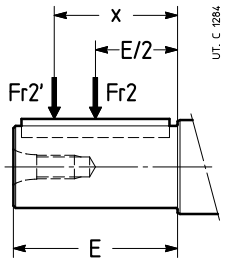

Size	y
400	561
401	554

where:

$F_{r2'}$ [lb] is the permissible radial load acting at the distance x from shaft shoulder;

F_{r2} [lb]] is the permissible radial load acting on center line of low speed shaft end (see table on next page);

E [mm] is the shaft end length (see ch. 25, 27);

y [mm] is given in the table;

x [mm] is the distance between the shaft shoulder and the load application point.

29.2 - Axial loads F_{a2} [lb] or radial loads F_{r2} [lb] on low speed shaft end

Radial load F_{r2} for most common drives has the following value and angular position:

$$F_{r2} = \frac{12\,600 \cdot P_2}{d \cdot n_2} \text{ [lb]}$$

for chain drive (lifting in general);
for timing belt drive replace
126 000 with 189 090

$$F_{r2} = \frac{315\,150 \cdot P_2}{d \cdot n_2} \text{ [lb]}$$

for V-belt drive

$$F_{r2} = \frac{134\,110 \cdot P_2}{d \cdot n_2} \text{ [lb]}$$

for spur gear pair drive

$$F_{r2} = \frac{447\,550 \cdot P_2}{d \cdot n_2} \text{ [lb]}$$

for friction wheel drive
(rubber-on-metal)

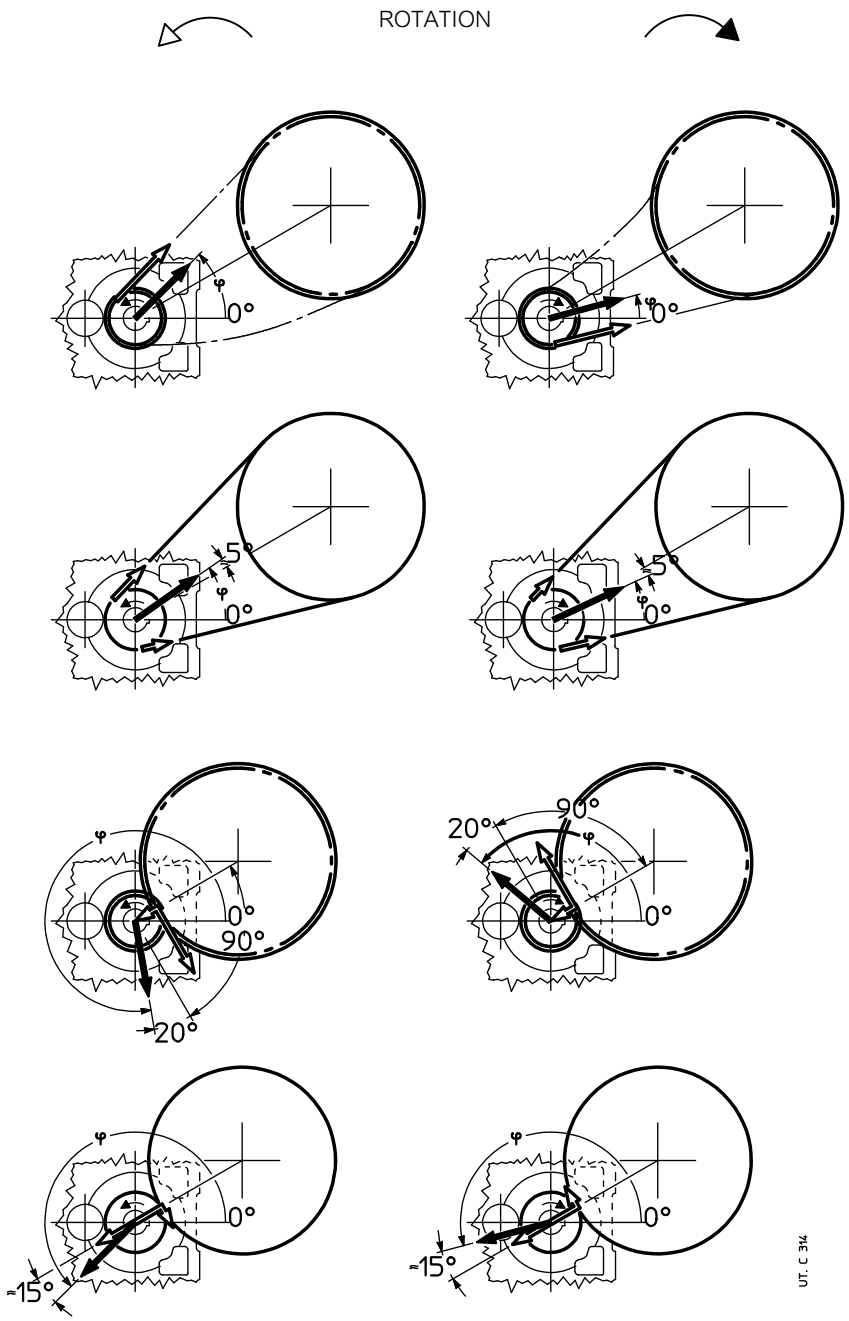

where: P_2 [hp] is the power required at the output side of the gear reducer, n_2 [rpm] is the speed, d [in] is the pitch diameter.

IMPORTANT: 0° coincides with a straight line concurrent with the axis of the last reduction and orientated as shown above, and therefore it follows the rotation of the housing, as shown below.

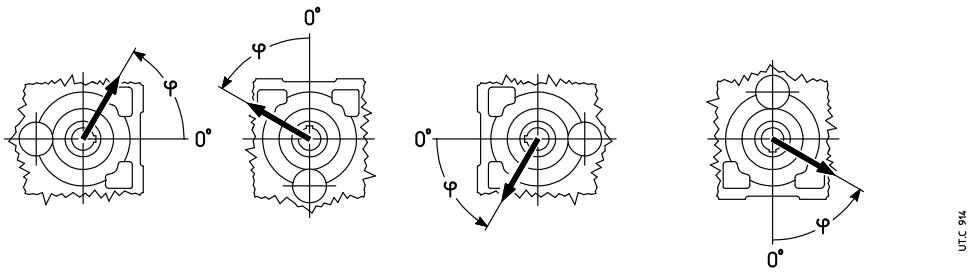

29.2 - Axial loads F_{a2} [lb] or radial loads F_{r2} [lb] on low speed shaft end

Radial load applied on **opposite side to low speed wheel**[3] (opposite side •)

size **400**

$n_2 \cdot L_h$	T_2	F_{r2} [1) 2)]																F_{a2} [1)]	
		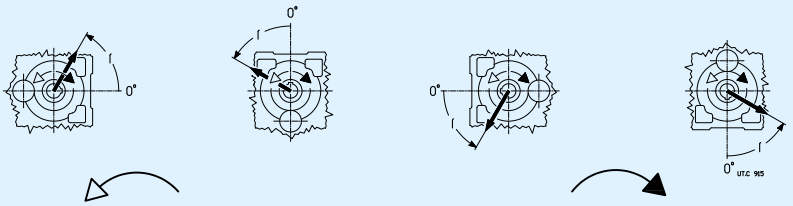																	
rpm · h	10^3 · lb in	0°	45°	90°	135°	180°	225°	270°	315°	0°	45°	90°	135°	180°	225°	270°	315°		
355 000	710	45	45	45	45	45	45	45	45	37,5	33,5	35,5	45	45	45	45	45	7,1	18
	500	45	45	45	45	45	45	45	45	45	45	45	45	45	45	45	45	9	18
450 000	710	45	45	45	45	45	45	45	45	33,5	28	31,5	40	45	45	45	45	5,6	18
	500	45	45	45	45	45	45	45	45	45	40	42,5	45	45	45	45	45	9	18
560 000	710	45	45	37,5	33,5	45	45	45	45	28	23,6	26,5	35,5	45	45	45	37,5	4	18
	500	45	45	45	45	45	45	45	45	40	35,5	37,5	45	45	45	45	45	9	18
710 000	710	45	45	23,6	21,2	33,5	45	45	45	23,6	20	22,4	31,5	45	45	45	33,5	2,8	18
	500	45	45	45	45	45	45	45	45	35,5	31,5	33,5	40	45	45	45	42,5	7,5	18
900 000	710	45	21,2	9	8	13,2	45	42,5	45	19	15	17	26,5	40	45	42,5	30	2	18
	500	45	45	45	45	45	45	45	45	31,5	28	30	35,5	45	45	45	37,5	6,3	18
	355	45	45	45	45	45	45	45	45	37,5	35,5	37,5	42,5	45	45	45	45	9	18
1 120 000	500	45	45	45	45	45	45	42,5	45	28	23,6	26,5	33,5	42,5	45	45	35,5	5,3	18
	355	45	45	45	45	45	45	45	45	33,5	31,5	33,5	37,5	45	45	45	40	8,5	18
1 400 000	500	45	45	37,5	35,5	45	40	40	42,5	23,6	21,2	22,4	30	37,5	45	40	31,5	4	18
	355	45	45	45	45	45	42,5	42,5	45	31,5	28	30	35,5	42,5	45	42,5	35,5	7,5	18
1 800 000	500	45	45	26,5	25	35,5	37,5	35,5	37,5	20	17	19	25	35,5	40	37,5	28	3	18
	355	45	45	45	45	45	40	37,5	40	28	25	26,5	31,5	37,5	42,5	40	33,5	6,3	17
2 240 000	500	42,5	33,5	18	17	25	33,5	33,5	35,5	17	14	16	22,4	31,5	37,5	33,5	25	2	17
	355	42,5	45	45	45	40	35,5	35,5	37,5	25	22,4	23,6	28	35,5	37,5	35,5	30	5,3	16
2 800 000	355	37,5	45	40	37,5	37,5	33,5	33,5	33,5	22,4	20	21,2	26,5	31,5	35,5	33,5	28	4,5	15
	250	40	42,5	45	42,5	37,5	35,5	33,5	35,5	28	25	26,5	30	33,5	37,5	35,5	31,5	7,1	14
3 550 000	355	35,5	40	33,5	31,5	35,5	31,5	30	31,5	19	17	18	22,4	30	33,5	31,5	25	3,55	14
	250	35,5	40	40	40	35,5	33,5	31,5	33,5	25	22,4	23,6	28	31,5	33,5	33,5	28	6	13,2
4 500 000	355	33,5	37,5	25	23,6	33,5	30	28	30	17	14	16	20	26,5	31,5	28	22,4	2,8	13,2
	250	33,5	37,5	37,5	35,5	33,5	31,5	30	31,5	22,4	20	21,2	25	30	31,5	30	26,5	5,3	12,5
							max 45											**9**	**18**

size **401**

355 000	850	45	45	45	45	45	45	45	45	45	45	45	45	45	45	45	45	9	18
	600	45	45	45	45	45	45	45	45	45	45	45	45	45	45	45	45	9	18
450 000	850	45	45	45	45	45	45	45	45	45	45	45	45	45	45	45	45	9	18
	600	45	45	45	45	45	45	45	45	45	45	45	45	45	45	45	45	9	18
560 000	850	45	45	45	45	45	45	45	45	45	42,5	45	45	45	45	45	45	9	18
	600	45	45	45	45	45	45	45	45	45	45	45	45	45	45	45	45	9	18
710 000	850	45	45	45	45	45	45	45	45	42,5	37,5	40	45	45	45	45	45	9	18
	600	45	45	45	45	45	45	45	45	45	45	45	45	45	45	45	45	9	18
900 000	850	45	45	45	45	45	45	45	45	37,5	31,5	33,5	45	45	45	45	45	8,5	18
	600	45	45	45	45	45	45	45	45	45	45	45	45	45	45	45	45	9	18
	425	45	45	45	45	45	45	45	45	45	45	45	45	45	45	45	45	9	18
1 120 000	600	45	45	45	45	45	45	45	45	45	40	42,5	45	45	45	45	45	9	18
	425	45	45	45	45	45	45	45	45	45	45	45	45	45	45	45	45	9	18
1 400 000	600	45	45	45	45	45	45	45	45	40	35,5	37,5	45	45	45	45	45	9	18
	425	45	45	45	45	45	45	45	45	45	45	45	45	45	45	45	45	9	18
1 800 000	600	45	45	45	45	45	45	45	45	33,5	31,5	33,5	40	45	45	45	45	9	18
	425	45	45	45	45	45	45	45	45	42,5	40	42,5	45	45	45	45	45	9	18
2 240 000	600	45	45	45	45	45	45	45	45	31,5	26,5	30	37,5	45	45	45	40	8	18
	425	45	45	45	45	45	45	45	45	37,5	35,5	37,5	42,5	45	45	45	45	9	18
2 800 000	425	45	45	45	45	45	45	45	45	35,5	31,5	33,5	40	45	45	45	42,5	9	18
	300	45	45	45	45	45	45	45	45	40	37,5	40	45	45	45	45	45	9	18
3 550 000	425	45	45	45	45	45	42,5	40	42,5	31,5	28	30	35,5	45	45	45	37,5	9	18
	300	45	45	45	45	45	45	42,5	45	35,5	33,5	35,5	40	45	45	45	42,5	9	18
4 500 000	425	45	45	45	45	45	40	37,5	40	28	25	26,5	31,5	40	45	42,5	35,5	8	18
	300	45	45	45	45	45	42,5	40	42,5	33,5	31,5	31,5	35,5	42,5	45	45	37,5	9	18
							max 45											**9**	**18**

29.2 - Axial loads F_{a2} [lb] or radial loads F_{r2} [lb] on low speed shaft end

Radial load applied on **low speed wheel side**[3] (side •)

size **400**

$n_2 \cdot L_h$	T_2	F_{r2} [1) 2)]																F_{a2} [1)]	
		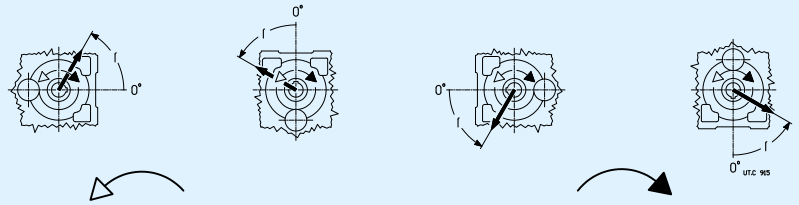																	
rpm · h	$10^3 \cdot$ lb in	**0°**	**45°**	**90°**	**135°**	**180°**	**225°**	**270°**	**315°**	**0°**	**45°**	**90°**	**135°**	**180°**	**225°**	**270°**	**315°**		
355 000	710	45	45	45	45	45	45	45	45	28	21,2	22,4	33,5	45	45	45	45	7,1	18
	500	45	45	45	45	45	45	45	45	45	35,5	37,5	45	45	45	45	45	9	18
450 000	710	45	45	45	45	45	45	42,5	45	22,4	16	17	28	45	45	45	42,5	5,6	18
	500	45	45	45	45	45	45	45	45	37,5	31,5	33,5	42,5	45	45	45	45	9	18
560 000	710	45	45	45	45	45	45	37,5	40	17	11,8	12,5	22,4	45	45	45	35,5	4	18
	500	45	45	45	45	45	45	45	45	33,5	28	30	37,5	45	45	45	45	9	18
710 000	710	45	45	45	45	45	40	33,5	35,5	11,2	7,5	8	16	42,5	45	45	30	2,8	18
	500	45	45	45	45	45	45	42,5	45	30	23,6	25	33,5	45	45	45	42,5	7,5	18
900 000	710	45	45	45	45	45	35,5	30	31,5	–	–	–	7,5	35,5	45	45	21,2	2,24	18
	500	45	45	45	45	45	42,5	37,5	40	25	19	20	30	45	45	45	37,5	6,3	18
	355	45	45	45	45	45	45	42,5	45	33,5	30	31,5	37,5	45	45	45	45	9	18
1 120 000	500	45	45	45	45	45	37,5	33,5	35,5	20	15	17	25	42,5	45	45	33,5	5,3	18
	355	45	45	45	45	45	42,5	37,5	40	31,5	26,5	26,5	33,5	45	45	45	40	8,5	18
1 400 000	500	42,5	45	45	45	45	35,5	31,5	33,5	17	11,8	12,5	20	37,5	45	45	31,5	4	18
	355	45	45	45	45	45	40	35,5	37,5	28	22,4	23,6	31,5	42,5	45	45	37,5	7,5	18
1 800 000	500	37,5	45	45	45	45	31,5	26,5	30	12,5	8,5	9,5	16	33,5	45	45	26,5	3	18
	355	40	45	45	45	45	35,5	31,5	33,5	23,6	19	20	26,5	37,5	45	45	33,5	6,3	17
2 240 000	500	35,5	45	45	42,5	40	30	23,6	26,5	8,5	–	–	11,8	30	45	42,5	22,4	2,24	17
	355	37,5	45	45	45	42,5	33,5	30	31,5	20	16	17	23,6	35,5	45	42,5	31,5	5,3	16
2 800 000	355	35,5	45	45	45	37,5	30	26,5	28	17	13,2	14	20	31,5	42,5	40	28	4,5	15
	250	35,5	45	45	45	40	33,5	30	31,5	25	21,2	22,4	28	35,5	40	40	31,5	7,1	14
3 550 000	355	31,5	42,5	45	45	35,5	28	23,6	25	14	10,6	11,2	17	30	40	35,5	25	3,55	14
	250	33,5	40	45	42,5	35,5	31,5	28	30	22,4	18	19	25	31,5	37,5	35,5	30	6	13,2
4 500 000	355	30	40	45	42,5	33,5	25	21,2	22,4	11,2	8,5	9	14	26,5	35,5	33,5	21,2	2,8	13,2
	250	31,5	37,5	42,5	40	33,5	28	25	26,5	19	16	17	21,2	30	35,5	33,5	26,5	5,3	12,5
							max 45											**9**	**18**

size **401**

355 000	850	45	45	45	45	45	45	45	45	45	40	42,5	45	45	45	45	45	9	18
	600	45	45	45	45	45	45	45	45	45	45	45	45	45	45	45	45	9	18
450 000	850	45	45	45	45	45	45	45	45	45	33,5	35,5	45	45	45	45	45	9	18
	600	45	45	45	45	45	45	45	45	45	45	45	45	45	45	45	45	9	18
560 000	850	45	45	45	45	45	45	45	45	37,5	28	30	45	45	45	45	45	9	18
	600	45	45	45	45	45	45	45	45	45	45	45	45	45	45	45	45	9	18
710 000	850	45	45	45	45	45	45	45	45	31,5	22,4	23,6	37,5	45	45	45	45	9	18
	600	45	45	45	45	45	45	45	45	45	40	40	45	45	45	45	45	9	18
900 000	850	45	45	45	45	45	45	42,5	45	23,6	17	18	30	45	45	45	45	7,5	18
	600	45	45	45	45	45	45	45	45	42,5	33,5	35,5	45	45	45	45	45	9	18
	425	45	45	45	45	45	45	45	45	45	45	45	45	45	45	45	45	9	18
1 120 000	600	45	45	45	45	45	45	45	45	35,5	30	31,5	42,5	45	45	45	45	9	18
	425	45	45	45	45	45	45	45	45	45	40	42,5	45	45	45	45	45	9	18
1 400 000	600	45	45	45	45	45	45	42,5	45	31,5	25	26,5	37,5	45	45	45	45	9	18
	425	45	45	45	45	45	45	45	45	42,5	35,5	37,5	45	45	45	45	45	9	18
1 800 000	600	45	45	45	45	45	45	37,5	40	26,5	20	21,2	31,5	45	45	45	45	8,5	18
	425	45	45	45	45	45	45	45	45	37,5	31,5	33,5	42,5	45	45	45	45	9	18
2 240 000	600	45	45	45	45	45	40	33,5	37,5	22,4	16	17	26,5	45	45	45	40	6,7	18
	425	45	45	45	45	45	45	40	42,5	33,5	28	30	37,5	45	45	45	45	9	18
2 800 000	425	45	45	45	45	45	42,5	37,5	40	30	23,6	25	33,5	45	45	45	42,5	9	18
	300	45	45	45	45	45	45	42,5	42,5	37,5	33,5	33,5	40	45	45	45	45	9	18
3 550 000	425	45	45	45	45	45	37,5	33,5	35,5	26,5	20	21,2	30	45	45	45	37,5	8,5	18
	300	45	45	45	45	45	42,5	37,5	40	33,5	30	30	35,5	45	45	45	42,5	9	18
4 500 000	425	40	45	45	45	45	35,5	30	31,5	22,4	17	18	26,5	40	45	45	35,5	7,1	18
	300	42,5	45	45	45	45	37,5	35,5	35,5	30	26,5	26,5	33,5	42,5	45	45	40	9	18
							max 45											**9**	**18**

Page intentionally left blank

30 - Accessories and non-standard designs

(2) Solid low speed shaft 428
(4) Solid low speed shaft with front holes 428
(5) Stepped hollow low speed shaft 429
(6) Hollow low speed shaft with shrink disc 430
(7) Protection for hollow low speed shaft with shrink disc 431
(9) Backstop device 432
(10) Reaction bolt using disc spring 433
(15) Fan cooling 434
(16) Water cooling by coil 435
(17) Cooling by internal exchanger 435
(18) Additional oversized diameter housing hole 436
(19) Forced bearing lubrication 436
(20) Hollow low speed shaft washer 436
(22) Hollow low speed shaft protection 436
(24) Special painting cycles 437
(25) Oil heater 439
(26) High and low speed shaft seals 439
(27) Magnetic plug 441
(28) Oil drain tap 441
(29) Independent cooling unit 441
(30) Oil temperature probe 443
(31) Oil temperature probe with amperometric transducer 443
(32) Bearing temperature probe 444
(33) Bearing temperature probe with amperometric transducer 445
(34) Bi-metal type thermostat 445
(35) Oil level switch with float 446
(36) Oil optical probe. 446
– Miscellaneous 447

ATTENTION. The simultaneous presence on the same gear reducer of two or more accessories or non-standard designs is not always possible: consult us, if need be.

(2) Solid low speed shaft

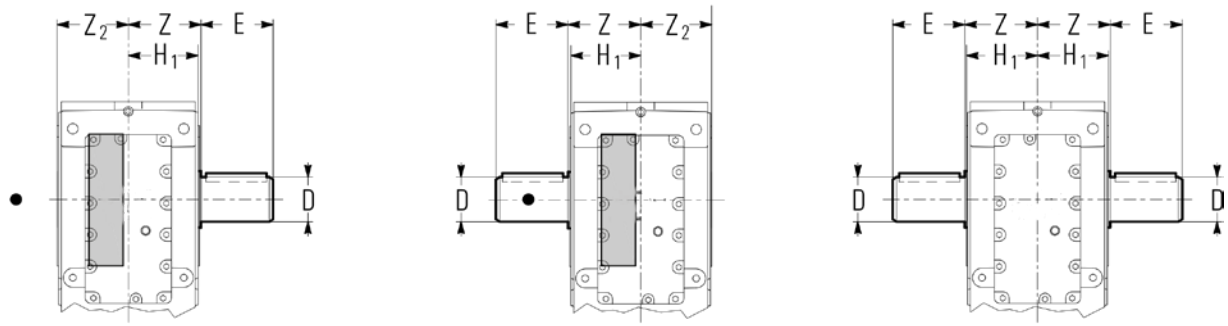

- Low speed wheel position (s. ch. 26 and 28) for the verification of radial load.

Size	D Ø	E	Z	Z_2	H_1	Δlb standard	Δlb double extension
400	190 m6	280	330	328	322	+330	+485
401	200 m6	280	330	328	322	+330	+507

Standard mounting position is with solid low speed shaft end on opposite side to low speed wheel. For reverse mounting, specify in designation «**mounted on groove side**».

The external diameter of the element or of the spacer abutting with the gear reducer must be (1.25 ÷ 1.4) · D; hole tolerance D H7 ... K7.

Other dimensions at ch. 24 «High and low speed shaft end».

Supplementary description when ordering by designation: **standard**, or **double extension low speed shaft**.

(4) Hollow low speed shaft with front holes

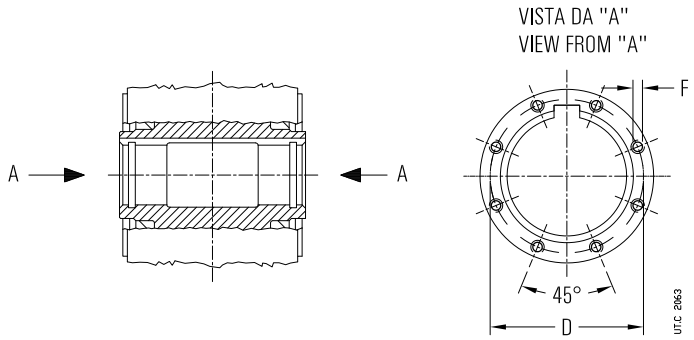

Size	D Ø	F[1]		$F_{a\,max}$[2] lb
400, 401	234	M14	No. 8	118 000

1) Thread depth 2 · F.
2) Maximum total axial load for screws class 8.8.

Hollow low speed shaft including tapped butt-end holes. The dimensions of threaded holes and the maximum axial load deriving from relevant screws in class 8.8 are stated in the table.

ATTENTION. This axial load cannot be sufficient to assure the dismounting of gear reducer from machine shaft end. In fact, according to coupling tolerances selected to realize the machine shaft end and according to coupling type suitable for installation environment and duty type (e.g.: alternate cycles, overloads, etc.) – the dismounting could require an extraction force much higher than threading capabilities, which would be in that case irremediably damaged. In these cases it is advised to adopt the extraction system through hollow low speed shaft washer (see ch. 30 (20)).

Supplementary description when ordering by **designation**: **hollow low speed shaft with front holes**.

(5) Stepped hollow low speed shaft

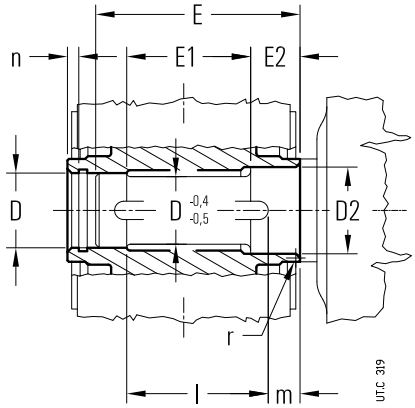

Size	D Ø	D_2 Ø	E 2)	E_1	E_2 2)	E_2 1) 2)	l	m	n	r
400, 401	200 H7	210 H7	620	300	165	130	600	10	14	5

1) Values valid for **R 4I**.

2) In presence of «Low speed shaft seal with labyrinth and grease feeder» (ch. 30 (26)) it is necessary to increase the dimension E (E2) of quantity A stated in the table on ch. 30 (26).

Stepped hollow low speed shaft, with keyway; this design **facilitates** installation and removal and **affords a notable increase** in rigidity and resistance to bending and torsional stresses at the shaft end of the driven machine.

D_2 hole is always **opposite to groove side.**

Important: the shoulder diameter of the driven machine shaft end abutting with the gear reducer must be at least (1.18 ÷ 1.25) · D.

Supplementary description when ordering by **designation**: stepped hollow low speed shaft.

(6) Hollow low speed shaft with shrink disc

Side to machine

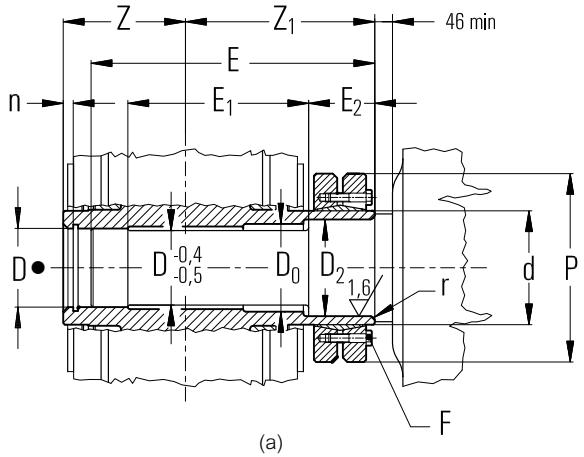

(a)
Stepped hollow low speed shaft with locking assembly and «long» machine shaft end

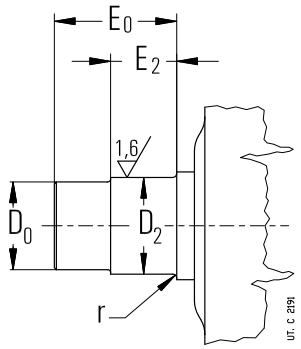

(b)
«Short» shaft end of driven machine

● Low speed wheel position (see ch. 26 and 28), except for train of gears 4I where the low speed wheel is on machine side

Gear reducer size	D Ø H7 / h6, j6	D_2 Ø H7 / h6, j6	D_0 Ø	E	E_0	E_1	E_2 1)		F 2)	M_S 3) N m	n	d Ø	P Ø	r	Z	Z_1	T_{2SD} 4) klb in	Δlb
400, 401	210	220	215	754	607	446	165	130	M20 n. 14	490	14	260	430	5	330	463	2522	+220

1) Values valid for **R 4I**.
2) Screws UNI 5737-88 class 10.9
3) Screw tightening torque.
4) Maximum torque value transmissible by shrink disc.

Stepped hollow low speed shaft with shrink disc on **machine side** (interposed between gear reducer and machine); this design **facilitates** installation and removal and **affords** a notable increase in rigidity of keying, **reduces** the deformations of machine shaft end, **avoiding** the necessity of safety guards on the unit itself. Moreover, since deformability of keying area is greater ($d - D_2 < d - D$) and friction area acts on a greater diameter ($D_2 > D$), maximum transmissible torque increases by 18 ÷ 25% compared to the solution with shrink disc on opposite side to machine.

For a further axial fastening and in order to facilitate the assembling and disassembling operations (see ch. 31), it is possible to make use of hollow low speed shaft washer with retaining ring and bolt for axial fastening (on request).

For the shaft end of driven machine on which gear reducer stepped hollow low speed shaft must be keyed, it is possible to adopt both «long» and «short» shaft end of driven machine: dimensions as per table.

In the first case (fig. a), where the «long» shaft end of driven machine acts as a guide, mounting operations are facilitated.

In the second case (fig. b), the reduced axial dimension of the «short» shaft end of driven machine, limits the mounting and removing overall dimensions at the very least.

In both cases the rigidity and the resistance to bending and torsional stresses at the shaft and of driven machine do not change, since the only surface through which torque transmission occurs is the D_2 one.

IMPORTANT. The shoulder diameter of the driven machine shaft end abutting with the gear reducer must be at least (1.18 ÷ 1.25) · D.

Supplementary description when ordering by **designation: hollow low speed shaft with shrink disc, on machine side.**

Opposite side to machine

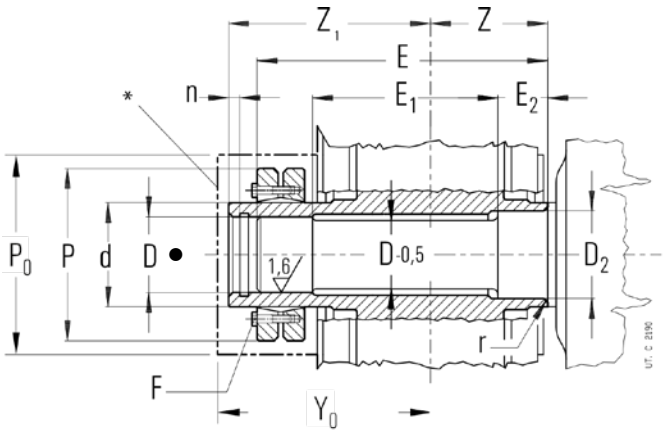

UT.C 2190-2192

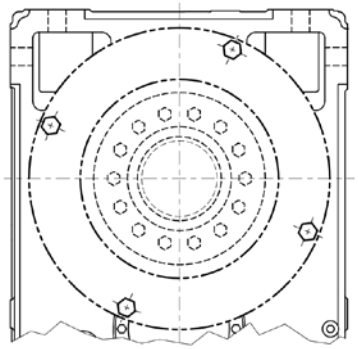

Safety guard
for shrink disc

● Low speed wheel position (see ch. 26 and 28), except for train of gears 4I where the low speed wheel is on machine side

Gear reducer size	D Ø H7 / h6, j6	D_2 Ø H7 / h6, j6	E 5)	E_1	E_2 5)	E_2 1) 5)	F 2)	M_S 3) N m	n	d Ø	P Ø	P_0 Ø	r	Z	Z_1	Y_0 ≈	T_{2SD} 4) klb in	Δlb
400, 401	210	220	788	480	165	130	M20 n. 14	490	14	260	430	450	5	330	497	522	+2248	+220

1) Values valid for **R 4I**.
2) Screws UNI 5737-88 class 10.9
3) Screw tightening torque.
4) Maximum torque value transmissible by shrink disc.
5) In presence of «Labyrinth seal and low speed shaft grease feeder» (ch. 30 (26)) it is necessary to increase the dimension E (E2) of quantity A stated in the table on ch. 30 (26).

* Protection for hollow low speed shaft with shrink disc, on request.

Stepped hollow low speed shaft with shrink disc on **machine opposite side**.

This design, compared with the machine side design, improves the accessibility to the shrink disc but it is more expensive and with a lower torsional stiffness; the shrink disc transmits a lower torque.

A protection for the shrink disc for personal safety-guard is supplied as standard, see chapter below for details.

IMPORTANT. The shoulder diameter of the driven machine shaft end abutting with the gear reducer must be at least (1.12 ÷ 1.18) · D.

Supplementary description when ordering by **designation: hollow low speed shaft with shrink disc, on machine opposite side.**

(7) Protection for hollow low speed shaft with shrink disc

Safety protections, made of steel, for gear reducers equipped with hollow low speed shaft with shrink disc on machine opposite side (groove side).

For dimensions and assembly sketch see «Low speed shaft with shrink disc on machine opposite side». «Hollow low speed shaft with shrink disc on machine opposite side».

The accessory is supplied already fitted as standard when ordering the option «Hollow low speed shaft with shrink disc on machine opposite side» .

(9) Backstop device

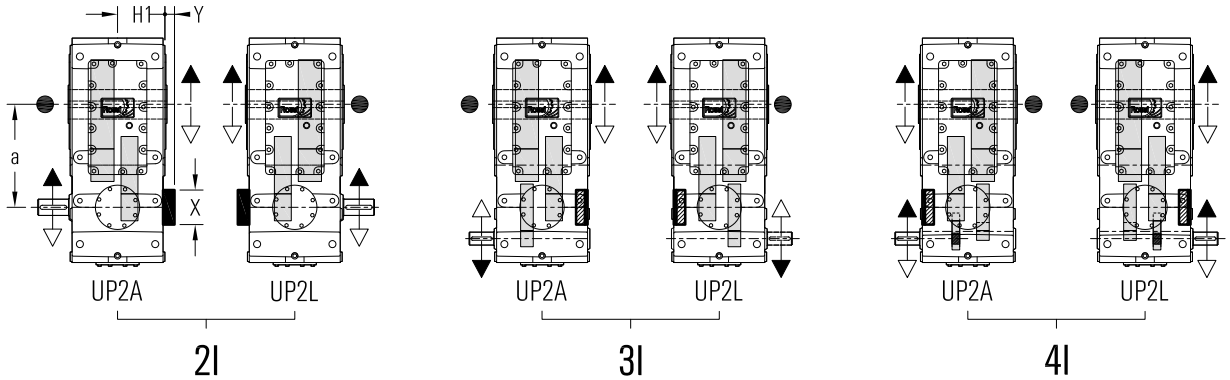

UT.C 2189

a	H_1	X Ø	Y Ø
400	322	248	13

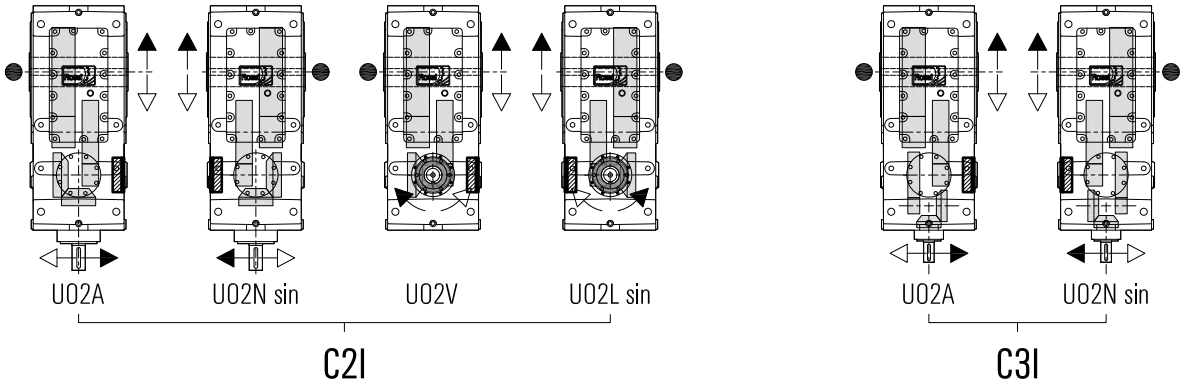

UT.C 2189

- Low speed wheel position (s. ch. 26 and 28) for the verification of radial load.

Backstop device available for helical gear reducers with $i_N \geqslant$ **12.5** and bevel helical gear reducers with $i_N \geqslant$ **11.2**. The maximum overload capacity of device is equal to **1.7** · T_{N2}.
The possible designs and positions are stated in the fig.
Backstope device doesn't project from dimension H_1 (except train of gears 2I).
Supplementary description when ordering by **designation**: **backstop device, white or black arrow free-rotation**.

(10) Reaction bolt using disc springs

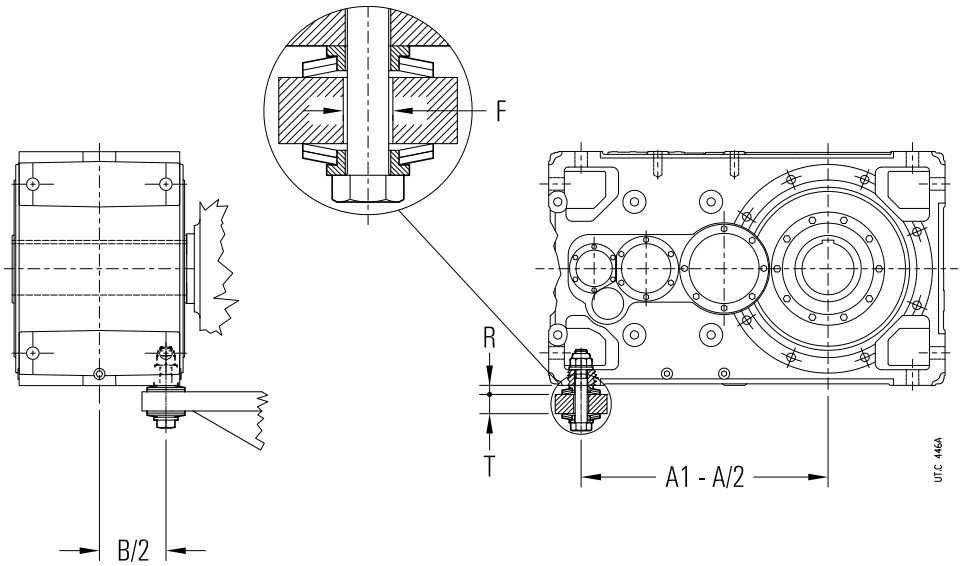

Gear reducer size	Screw UNI 5737-88	Disc spring DIN 2093	**A1 - A/2**	**B/2**	**T**	**F** Ø	**R** 1)
400, 401	M45 × 260	A 125 n. 2	950	256	55	50	31

1) Theoretical value: tolerance 0 ÷ -1.

Reaction arrangement for shaft mounting See technical explanations at ch. 18. Do not apply in the feet holes on short side.

Supplementary description when ordering by **designation**: **reaction bolt using disc springs**

(15) Fan cooling

The **helical** gear reducers **R 2I** and **R 3I** can be supplied with **one** or **two** cooling fans keyed on high speed shafts. For dimensions **e**, and **c** see ch. 26.

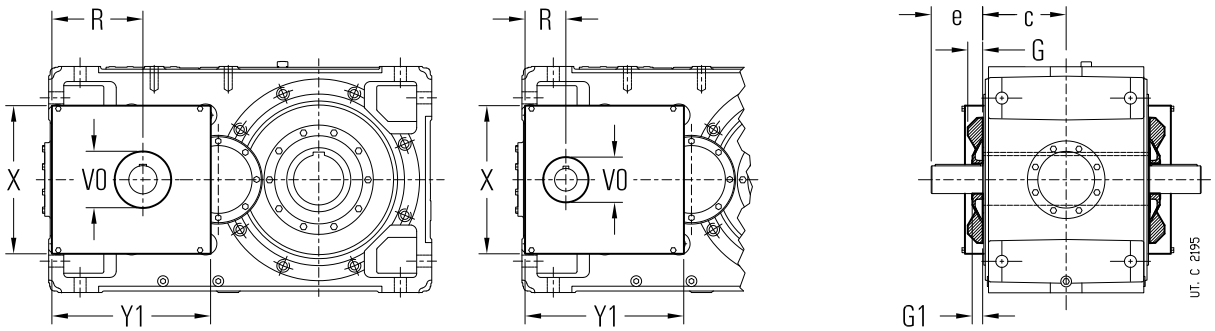

Gear reducer size		2I			3I				
	G 1)	**G_1** 2)	**R**	**V_0** Ø	**G_1** 2)	**R**	**V_0** Ø	**X**	**Y_1**
400, 401	63	50	363	220	40	163	175	560	633

1) Bolts projecting 6 mm from **G** dimension.
2) The high speed shaft end length is equal to **e - G_1**.

The **bevel helical** gear reducers **R C2I** can be supplied with **one** only cooling fan keyed onto high speed shaft. For dimensions **e** and **c** see ch. 28.

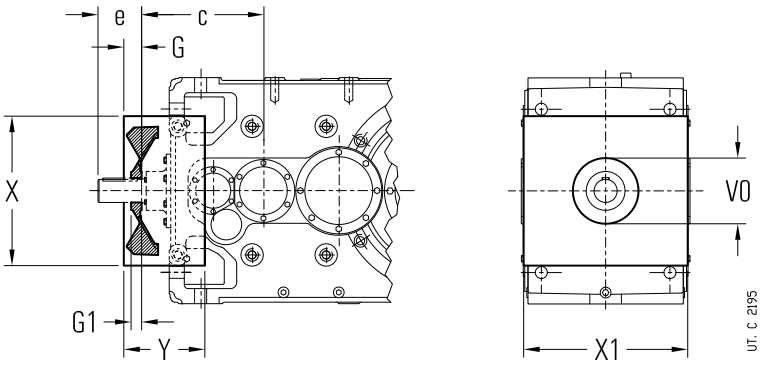

Gear reducer size	**G**	**G_1** 2)	**V_0** Ø	**X**	**X_1** 1)	**Y**
400, 401	72	47	220	590	640	310

1) Bolts projecting 6 mm from dimension **X_1**.
2) The high speed shaft end length is equal to **e - G_1**.

With double extension high speed shaft designs both extensions are accessible even with fan fitted: personnel safety-guards are the Buyer's responsibility (2006/42/EEC).

Possible designs and positions are those illustrated below.

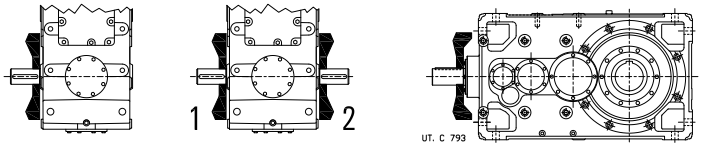

Temperature of cooling air must not exceed ambient temperature.

Supplementary description when ordering by **designation**: **fan cooling**; in design with double extension high speed shaft state if pos. **1** or **2** or – only for helical gear units – **1 and 2**.

Also available independent cooling unit with heat exchanger (see ch. 30 (29)); consult us if need be.

(16) Water cooling by coil

Coil made of copper alloy for gear reducer water cooling. On request, available also stainless steel coil (AISI 316) or cupro-nickel, consult us.

Design not possible for vertical mounting positions (V5, V6) with low speed shaft wheel positioned on the bottom.

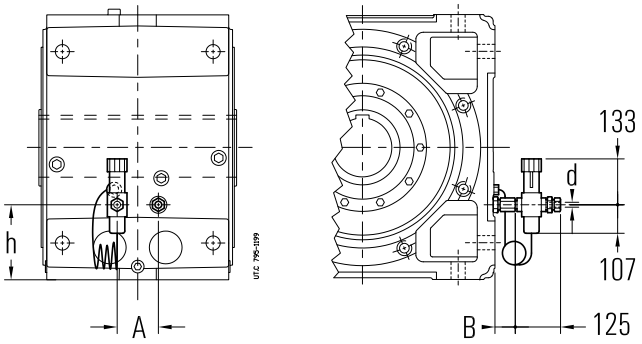

Gear reducer size	A[1)] ≈	B[1)] ≈	d Ø	h
400, 401	140	45	16	255

1) Values valid for mounting position B3 and designs U ... A; for other mounting positions and/or designs, consult us.

Cooling water specifications:
– be not too hard ≤ 12 °F (French degrees);
– be at max temperature 68 °F (20 °C);
– capacity 2.6 ÷ 5.2 gal/min;
– pressure 29 ÷ 58 psi (2 ÷ 4 bar).

A polished metallic pipe (with external diameter **d** stated on table) is sufficient for the connection.

The load loss of coil, according to capacity and water pressure, is approximately 9 ÷ 12 psi.

On request thermostatic valve which, automatically and without auxiliary supply need, permits water circulation when gear reducer oil reaches the set temperature; the valve sensor is equipped with immersion bulb. Mounting and setting, adjustable within 122 ÷ 194 °F (50 ÷ 90 °C), are Buyer's responsibility.

For ambient temperature lower than 32 °F (0 °C) consult us.

Supplementary description when ordering by **designation**: **water cooling by coil** or **water cooling by coil and thermostatic valve**.

(17) Cooling by internal exchanger

Gear reducers sizes 400, 401 helical type 2I and 3I, bevel helical type C2I and C3I design UO2A, UO2H, UO2V can be equipped with **internal** and **extractable** heat exchanger, made of aluminium, mounted on gear reducer inspection cover (facilitating the maintenance operations) for the water cooling of lubrication oil.

The value of thermal factor ft_{1b} according to mounting position is given in the table.

Dimensions on request: consult us.

Cooling water specifications:
– be not too hard ≤ 12 °F (French degrees);
– max temperature 68 °F (20 °C);
– capacity 2.6 ÷ 5.2 gal/min;
– pressure 29 ÷ 58 psi (2 ÷ 4 bar).

Gear reducer size	ft_{1b}		
	B3	B6, B7	B8, V5, V6
400, 401	2	2.24	2.12

A polished metallic pipe with external diameter **Ø16** is sufficient for the connection, paying attention to keep fixed the fillet using a second hexagon wrench, when fastening the pipe on the fillet.The load loss in the internal exchanger, according to capacity and water pressure, is 20 ÷ 26 psi for diameter Ød 16 and 26 ÷ 29 psi for Ød 12.

On request thermostatic valve which, automatically and without auxiliary supply need, permits water circulation when gear reducer oil reaches the set temperature (after technical technical feasibility verification, consult us); the valve sensor is equipped with immersion bulb. Mounting and setting, adjustable within 122 ÷ 194 °F (50 ÷ 90 °C), are Buyer's responsibility.

For ambient temperature lower than 32 °F (0 °C) consult us.

Supplementary description when ordering by **designation**: **independent cooling with internal exchanger**.

(18) Additional oversized diameter housing hole for oil cooling from external circuit

In the event of an oil cooling system through centralized external circuit (e.g.: paper plants) it is necessary to foresee an additional hole of proper dimensions on gear reducer housing in order to allow the lubricant flow for gravity.

The setting of oil flow at gear reducer input must be executed during running by the Customer.

The heat quantity dissipated by the system depends on oil flow and on input and output oil temperature difference.

Available only for mounting positions B3 and B8.

Tapped butt-end hole **G 2 1/2”**.

Supplementary description when ordering by **designation: additional oversized diameter housing holes.**

(19) Forced bearing lubrication

All gear reducers according to train of gears, design, transmission ratio, mounting position, input speed and duty cycle can be equipped with a non-oil-bath forced bearing lubrication system through **internal piston pump** or external **lubrication system with motorpump** (see ch. 24).

The following table resumes the cases (see 💧 at ch. 26, 28) where – **according to the only mounting position** and for continuous duty – it is necessary to foresee the bearing lubrication. For other operating conditions, consult us.

Train of gears	Designs	Presence of **lubrication pump** Mounting position					
		B3	**B6**	**B7**	**B8**	**V5**	**V6**
2I, 3I, 4I	**all**	–	–	–	n.a.	P	P
C2I	**UO2A, UO2N sin**	–	P	–	n.a.	P	P
	UO2H, UO2M sin	P	P	–	n.a.	P	P
	UO2V, UO2L sin	P	–	–	–	P	P
C3I	**all**	–	P	–	n.a.	P	P

– Forced bearing lubrication not necessary.
P Forced bearing lubrication necessary (with pump or motor pump).
n.a. Mounting position not foreseen.

For cases highlighted with ▲ ch. 25 and 27, foresee the lubrication with **motor pump** and possible heat exchanger (see ch. 22, 24, 30(29)).

IMPORTANT. For the running at cold starting $T_{ambient} = T_{oil} \leqslant 77$ °F (25 °C) and lubrication systems (see also ch. 24 and 30 (11)), **always foresee the oil heater** (see ch. 30 (25)).

In general, when the maximum system reliability is required, in presence of particulary heavy load cycles or hard ambient conditions, it is recommended to evaluate the possibility to install anyway the bearing lubrication motor pump; consult us.

Supplementary description when ordering by **designation**: **bearing lubrication pump** or **bearing lubrication motor pump**.

(20) Hollow low speed shaft washer

Gear reducers with hollow low speed shaft or with hollow low speed shaft with shrink disc can be equipped with washer, retaining ring and screw for axial fastening (see ch. 31).

Supplementary description when ordering by **designation**: **hollow low speed shaft washer**.

(22) Hollow low speed shaft

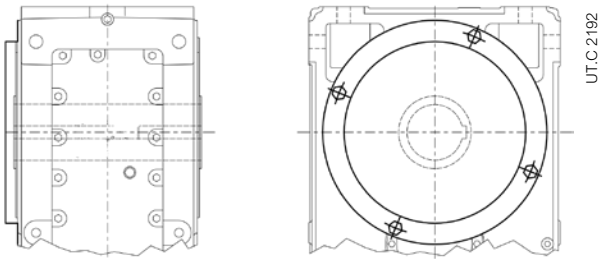

Safety protections, made of steel, of the area not used of the hollow low speed shaft. The protection is to be mounted on low speed wheel side (on the opposite side for R 4I; see also ch. 26 and 28). Dimensions on request; consult us.

(24) Optional paint (sizes 400, 401)

The gear reducers and gearmotors can be supplied with optional painting cycles, according to following table.
Additional description when ordering by **designation**: **optional paint ...** (see code stated in the table; i.e.: «**optional paint 2HRAL5010**».

Application field	Features	Corrosivity class ISO 12944-2	Durability classes ISO 12944-2	Description	Final thickness on machined parts ISO 19840 µm	Code
Applications in aggressive environments	Good resistance to atmospheric and aggressive agents	C4	L	Dual-compound, high-thickness epoxy primer Water-based dual-compound polyacrylic enamel	≥ 160	**1HRAL5010** (blue)
			M 2)	Dual-compound, high-thickness epoxy primer Water-based dual-compound polyacrylic enamel	≥ 180	**2HRAL5010** (blue)
			H 3)	Dual-compound, high-thickness epoxy primer Water-based dual-compound polyacrylic enamel	≥ 240	**3HRAL5010** (blue)
Outdoor applications in saline environment	Excellent resistance to atmospheric and aggressive agents Outdoor applications in saline environment	C 5	M	Sandblasting Zinc-rich dual-compound anti-rust primer Dual-compound, high-thickness epoxy primer Water-based dual-compound polyacrylic enamel	≥ 240	**2IRAL5010** (blue)
			H 2)	Sandblasting Zinc-rich dual-compound anti-rust primer Dual-compound, high-thickness epoxy primer Sealing with polyurethane sealant Water-based dual-compound polyacrylic enamel	≥ 280	**2KRAL5010** (blue)
Outdoor applications in chemically aggressive environment and high humidity industrial areas	Excellent resistance to atmospheric and aggressive agents Outdoor applications in chemically aggressive environment (fertilizers, etc.)	C 5	M	Sandblasting Zinc-rich dual-compound anti-rust primer Dual-compound, high-thickness epoxy primer Water-based dual-compound polyacrylic enamel	≥ 240	**2LRAL5010** (blue)
			H 2)	Sandblasting Zinc-rich dual-compound anti-rust primer Dual-compound, high-thickness epoxy primer Sealing with polyurethane sealant Water-based dual-compound polyacrylic enamel	≥ 280	**2YRAL5010** (blue)

2) Not available on motors.

3) For motors ,C4H possible with cycle 2H sp ≥180 µm

NOTE: cycles with specific features: antibacterial for FOOD environments, for ATEX environments, for zinc free environments on request.

Other colors are available on request, preferred RAL codes are as follows:

1000, 1003, 1004, 1013, 1014, 1015, 1016, 1018, 1021, 1023, 1028,

2000, 2001, 2002, 2003, 2004, 2009, 2010,

3000, 3001, 3002, 3003, 3005, 3007, 3011, 3016, 3020,

4003,

5000, 5001, 5002, 5003, 5005, 5007, 5008, 5009, 5011, 5012, 5013, 5015, 5017, 5018, 5019, 5021, 5022, 5023, 5024,

6000, 6001, 6003, 6004, 6005, 6010, 6011, 6012, 6017, 6018, 6019, 6020, 6021, 6024, 6025, 6026, 6027, 6028, 6029, 6032, 6033, 6037,

7000, 7001, 7004, 7006, 7011, 7012, 7015, 7016, 7021, 7022, 7023, 7024, 7030, 7031,7032, 7033, 7034, 7035, 7036, 7037, 7038, 7040, 7042, 7043, 7044, 7046, 7048,

8012, 8014,

9001, 9002, 9003, 9005, 9011, 9017, 9006, 9007, 9010, 9016, 9018, 9023

(25) Oil heater

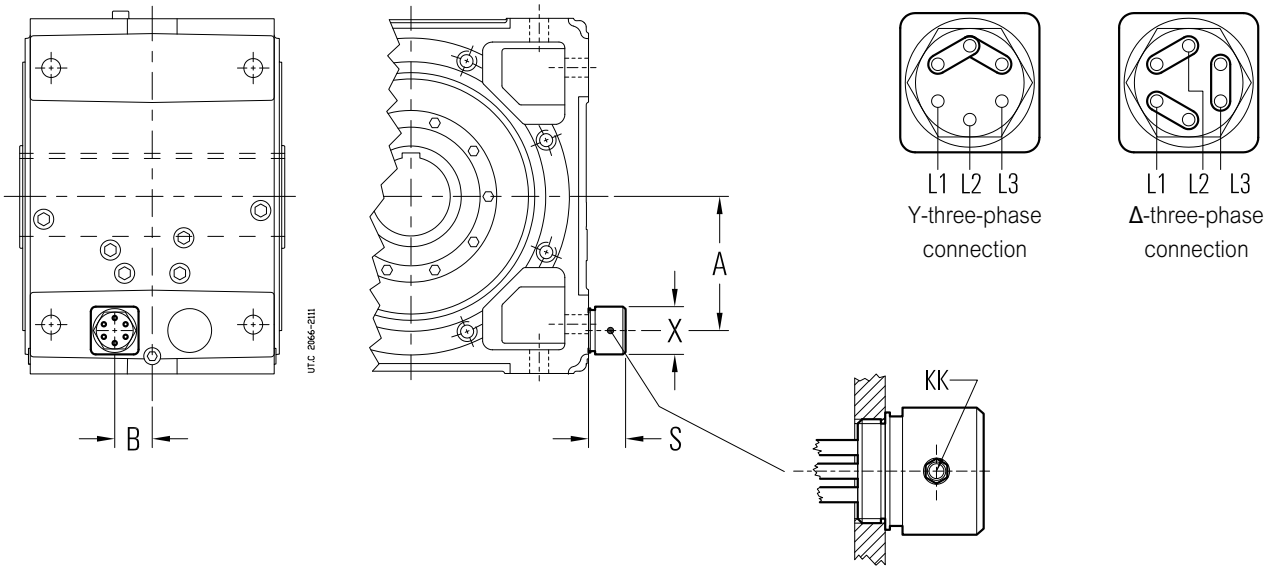

Gear reducer size	A	B	S ≈	X	KK	Supply	P hp
400, 401	340	95	90	85	Pg13	~ 3 Δ230 Y400 V - 50 Hz	n. 1 × 2.8

Oil heater for gear reducer starting at low ambient temperature.

Specify the design «Oil temperature probe» together with this design.

The heater is piloted through proper control device (at customer's care e.g..: PLC or supplied by Rossi e.g. 2-threshold signalling device CT03 or three-threshold signalling device CT10) releasing when achieving the pre-set oil temperature.

IMPORTANT. The data stated in the table refer to mounting positions **B3**; for other mounting positions, consult us.

The design can be not compatible with other designs, consult us.

Features:
- specific power 2.5 hp/ft$^{2;}$
- three-phase supply Δ230 Y400 V 50-60 Hz;
- stainless steel resistors AISI 321;
- metallic terminal box; cable gland Pg13; protection IP 65;
- horizontal mounting with oil bath lubrication;
- max oil temperature 194 °F (90°C);
- threaded brass joint G 2”½;
- available also in ATEX design; dimension and power values change, please consult us.

Available also in a version equipped with integrated thermostat.

Supplementary description when ordering by **designation**: **oil heater** or **oil heater with thermostat.**

(26) High and low speed shaft seals

Available seal types (standard and on request) on high and low speed shafts are stated in the following table.

- Acrylonitrilic seal ring compound as standard; fluoro compound seal rings are available on request (e.g.: for high temperatures, for aggressive environments or for high rotation speeds, etc.); specify in the designation: **fluoro compound seal**.
- The **high speed shaft double seal** is usually not advised as the increased heating reduces the seal life.
- In case of **double seal**, the external seal ring can be mounted on the contrary (e.g. water jets); specify in the designation: external ring mounted on the contrary.
- The design **high speed shaft seal with labyrinth and greaser** can be supplied only after technical feasibility evaluation by Rossi S.p.A.: consult us.
- The **hollow shaft with shrink disc** (see ch. 30 (6)) can be supplied with labyrinth seal only on shrink disc **opposite side**; in this case, it is necessary to foresee «**hollow low speed shaft protection with shrink disc**» (see ch. 30 (7)); when this design is not available, consult us.

For the supplementary description when ordering by **designation**, see table.

Seal type	Scheme
Standard	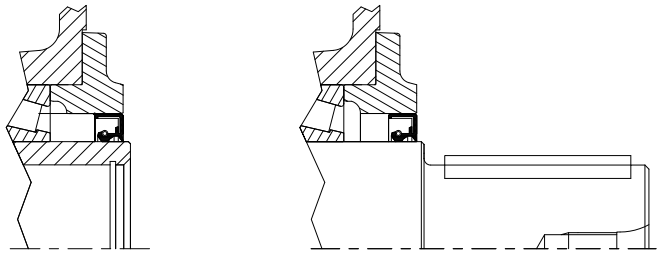
Double seal on high speed shaft Quite polluting environment and/or outdoor **Low speed shaft double seal** Quite polluting environment and/or outdoor	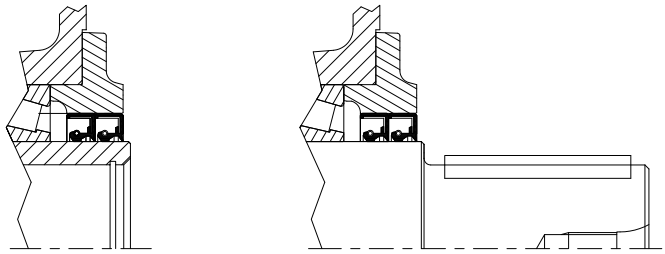 Supplementary description when ordering by **designation**: **double seal on high speed shaft**. **double seal on low speed shaft**.
High speed shaft seal with labyrinth and grease feeder («taconite») Very polluting environment (e.g.: mining industry)	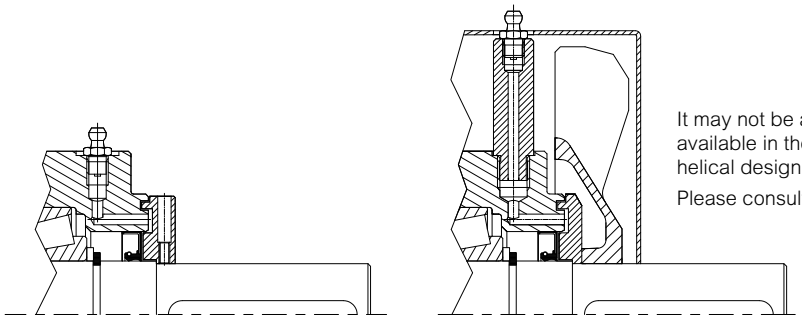 It may not be always available in the bevel helical design with fan. Please consult us. Supplementary description when ordering by **designation**: **high speed shaft seal with labyrinth and grease feeder.**
Low speed shaft double seal with labyrinth and grease feeder («taconite») Very polluting environment (e.g.: mining industry) 1)	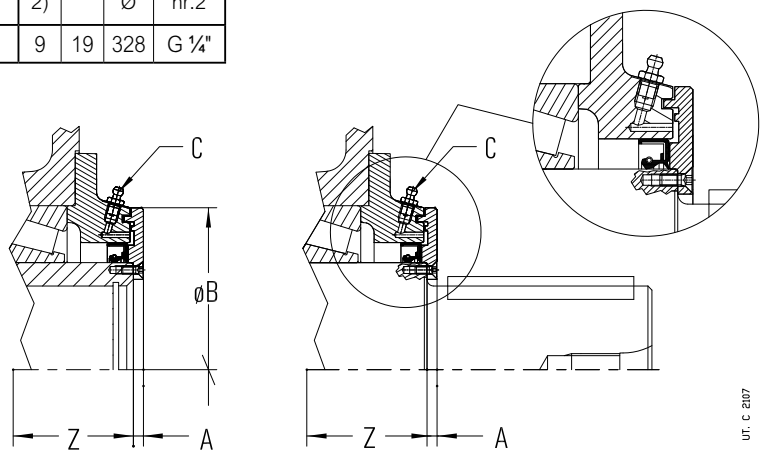 Supplementary description when ordering by **designation**: **low speed shaft seal with labyrinth and grease feeder.**

Gear reducer size	A 2)		B Ø	C nr.2
400, 401	9	19	328	G ¼"

1) The labyrinth disc overhangs from A dimension and from shaft shoulder; the working length of low speed shaft end will be therefore equal to E - A (for dimension C and E see ch. 26 and 28); for dimension Z see ch. 30 (1), (3).

2) Values valid for hollow shaft (with keyway or shrink disc).

(27) Magnetic plug

Oil drain magnetic plug in order to reduce lubricant pollution and to increase the maintenance intervals.

In presence of oil drain tap (28) the oil drain magnetic plug is mounted in a second drain hole on housing and not in the tap.

Additional description when ordering by **designation**: **oil drain magnetic plug**.

(28) Oil drain tap

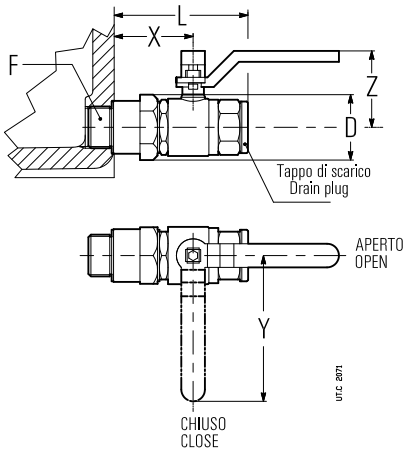

Gear reducer size	F	D Ø	L ≈	X	Y	Z
400, 401	G 1"	46	106	66	115	60

Accessory supplied already fitted.

Additional description when ordering by **designation**:
oil drain tap

(29) Independent cooling unit

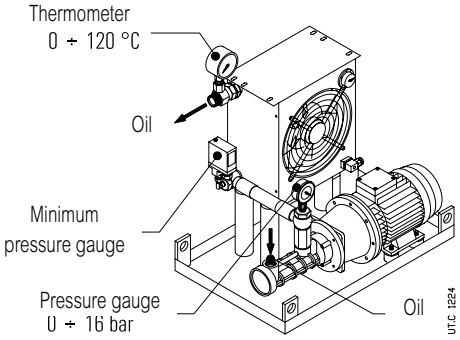

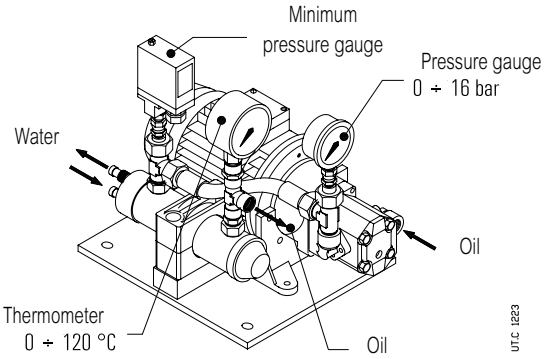

Additional cooling device in the event that the other forced cooling systems are not sufficient anymore for the dissipation of thermal power produced by gear reducer during operation (see ch. 22).

Including:

- a **oil/air heat exchanger** O/A; with thermostat 32 - 194 °F (0 ÷ 90 °C) or **oil/water** (O/W);
- one **motor pump**: screw pump with fluoro rubber seals (gear pump for UR O/W 5hp ÷ UR O/W 28hp); 4 pole motor B3/B5 (three-phase 230 Y400 V 50 Hz); motor-pump connection with coupling;
- a **motor fan** (O/A) (three-phase supply 230 Y400 V 50 Hz or single phase supply 230 V 50, 60 Hz, see table on following page); 2-poles motor (UR O/A 7hp and 9hp) and 4-poles motor (UR O/A 13hp ... 62hp);
- one **analog manometer** 0 - 250 psi (0 ÷ 16 bar) mounted between pump and exchanger;
- one **analog thermometer** 32 - 250 °F (0 ÷ 120 °C) mounted at exchanger output;
- one **minimum pressure gauge** (with exchange contacts) mounted between pump and exchanger;
- one **supporting frame** with nameplate.

On request, several accessories are at disposal (supplied separately, assembly is Customer's responsibility) in order to satisfy all functionality and safety needs.

- **oil temperature probe Pt100**;
- **2-threshold signalling device CTN03** (necessary also the oil temperature probe Pt100) for the mounting to DIN EN 50022;
- **3-threshold signalling device CTN10** (necessary also the oil temperature probe Pt100) for the mounting to DIN EN 50022;
- **bi-metal type thermostat**;
- **flow gauge**;
- **filter** (with optical-electric blockage warning and one or two breathers M60).

30 - Accessories and non-standard designs

Connections realized by flexible pipes (type SAE 100 R1, maximum length 6.56 ft) between gear reducer and cooling unit and the assembly of accessories and signalling devices are Buyer's responsibility.

For the heat exchanger power required by the independent cooling unit:

$$P_S \geqslant (P_1 - Pt_N \cdot ft_1 \cdot ft_2 \cdot ft_3 \cdot ft_4 \cdot ft_5) \cdot (1 - \eta) \cdot K_1$$

where:

P_S nominal power of unit [hp], i.e. the power dissipable with hot oil at approx. 176 °F (80 °C) and cooling air at 104 °F (40 °C) (O/A) or cooling water at 68 °F (20 °C) (O/W) with stated capacity (see following table);

P_1 power at gear reducer input [hp] (consider the power installed when being uncertain about the power absorbed).

Pt_N nominal thermal power of gear reducer [hp] (see ch. 22);

ft_1 thermal factor according to input speed (see ch. 22);

ft_2 thermal factor according to ambient temperature (see ch. 22);

ft_3 thermal factor according to mounting position (see ch. 22);

ft_4 thermal factor according to altitude (see ch. 22); for UR O/A it is necessary to derate also the exchanger power: multiply P_S by 0.85 (by 3 300 - 8 200 ft above sea level) or by 0.71 (by 8 200 - 16 400 ft above sea level);

ft_5 thermal factor according to air speed on the housing (see ch. 22);

η gear reducer efficiency (see ch. 24);

K_1 = 1,18 takes into account the decrease of the exchanger efficiency due to dirt on the external surface

Oil/air unit (UR O/A)

Designation	P_S	Exchanger	Oil motor pump		Motor fan			Oil connections		Exchanger capacity	Mass
	hp		motor 3~ hp	flow rate ft³/min	motor hp		flow rate ft³/min	Intake	delivery	ft³	lb
UR O/A 7hp	**6.7**	AP 300E	2	1.1	0.20	1~	540	1" (1"1/4)[2]	1" (1"1/4)[2]	0.07	130
UR O/A 9hp	**9.4**	AP 300/2E	2	1.1	0.20	1~	770			0.13	145
UR O/A 13hp	**13**	AP 430E	2	1.1	0.15	3~	1620			0.13	155
UR O/A 17hp	**17**	AP 430/2E	2	1.1	0.19	3~	2060			0.19	165
UR O/A 21hp	**21**	AP 580 EB	3	2	0.19	3~	2830			0.53	210
UR O/A 28hp	**28**	AP 680 EB	3	2	1.41	3~	5180			0.57	260
UR O/A 35hp	**35**	AP 730 EB	4	2	1.41	3~	5180	1" 1/4	1" 1/2 (1")[1]	0.57	280
UR O/A 40hp	**40**	AP 730 EB	4	2.8	1.41	3~	5180			0.57	280
UR O/A 54hp	**54**	AP 830 EB	3	2	1.74	3~	6770			0.71	310
UR O/A 62hp	**62**	AP 830 EB	4	2.8	1.74	3~	6770			0.71	310

1) Connection for UR O/A 16 delivery.

2) Connection for the delivery in case of filter.

Oil/water unit (UR O/W)

Designation	P_S	Exchanger	Oil motor pump		Water		Oil connections		Capacity exchanger	Mass
	hp		motor 3~ hp	flow rate ft³/min	flow rate ft³/min	connection	intake	delivery	ft³	kg
UR O/W 5hp	**5.4**	T60CB1	0.5	0.6	⩾ 0.3 (⩽ 1.1)	Ø 12 mm	G 1/2"	G 1/2"	0.01	30
UR O/W 8hp	**8**	T60CB2	0.5	0.6	⩾ 0.4 (⩽ 1.1)	Ø 12 mm	G 1/2"	G 1/2"	0.02	35
UR O/W 12hp	**12**	T80CB2	0.75	0.6	⩾ 0.6 (⩽ 1.1)	Ø 12 mm	G 1/2"	G 1/2"	0.04	40
UR O/W 17hp	**17**	MS84P2	1.5	1.1	⩾ 0.9 (⩽ 1.6)	G 1/2"	G 3/4"	G 3/4"	0.04	70
UR O/W 28hp	**28**	MS134P1	2	1.1	⩾ 1.4 (⩽ 3.9)	G 1"	G 3/4"	G 3/4"	0.11	95
UR O/W 42hp	**42**	MS134P1	3	2	⩾ 1.8 (⩽ 3.9)	G 1"	G 1"1/4	G 1"1/4	0.11	120
UR O/W 67hp	**67**	MS134P2	4	2.8	⩾ 2.8 (⩽ 3.9)	G 1"	G 1"1/4	G 1"1/4	0.16	155

Supplementary description when ordering by **designation**:

independent oil-air cooling unit UR O/A ... or **independent oil-air cooling unit UR O/W ...**, possibly integrated, when required by the application, with the description: «**Forced lubrication …**» and the statement of bearings and/or gears to be lubricated.

For dimensions, accessories, **low temperature starting** and further technical details, see specific documentation.

(30) Oil temperature probe

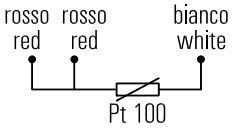

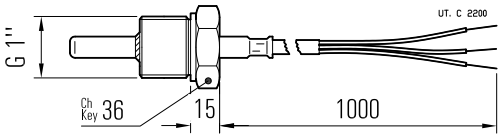

Remote oil temperature gauge; installation instead of drain plug, or into a hole properly pre-arranged by the Buyer. The temperature gauge is realized with a thermo-resistor Pt100 having following features:

- platinum wire with 100 Ω at 32 °F (0 °C) according to EN 60751;
- precision class B according to EN 60751;
- operation temperature field -40 °F - +392 °F (-40 °C - 200 °C);
- max current 3 mA;
- 3 wire connection according to IEC 751 (see fig. on the top);
- stainless steel probe AISI 316; diameter 6 mm;
- cable 1 m long with free end.

For the connection of probe to relevant signalling device CT03 or CT10 (on request, consult us) use a protected section cable ⩾ 1,5 mm^2 positioned separately from power cables.

In case of gear reducer supplied **filled with oil** foresee the probe equipped with **immersion bulb** (pre-mounted in the factory), its position is to be agreed with Rossi; consult us.

Supplementary description when ordering by **designation**: **oil temperature probe**.

(31) Oil temperature probe with terminal box and amperometric transducer 4 ÷ 20 mA

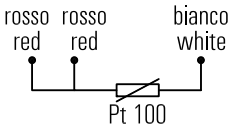

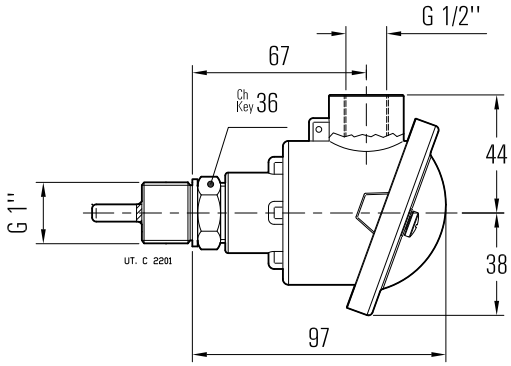

Remote oil temperature gauge, with terminal box and amperometric transducer; installation instead of drain plug, at Buyer's responsibility. The temperature gauge is realized with a thermo-resistor Pt100 having following features:

- platinum wire with 100 Ω at 0 °C according to EN 60751;
- precision class B according to EN 60751;
- operation temperature field -40 °F - +392 °F (-40 °C - 200 °C);
- 3 wire connection according to IEC 751 (see fig. on the top);
- stainless steel probe AISI 316; diameter 6 mm;
- amperometric transducer with output signal 4 - 20 mA;
- alluminium terminal block (supplied without cable gland);
- IP65 protection;
- input cables G ½";

For the connection of probe to relevant signalling device CT03 or CT10 (on request, consult us) use a protected section cable ⩾ 1,5 mm^2 positioned separately from power cables.

ATTENTION. Accessory available only after technical feasibility evaluation by Rossi: consult us.

In case of gear reducer supplied **filled with oil** foresee the probe equipped with **immersion bulb** (pre-mounted in the factory), its position is to be agreed with Rossi; consult us.

Supplementary description when ordering by **designation**: **oil temperature probe with amperometric transducer.**

(32) Bearing temperature probe

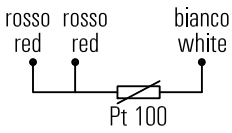

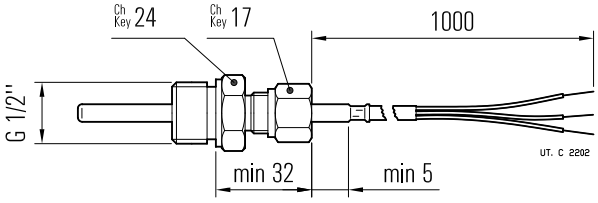

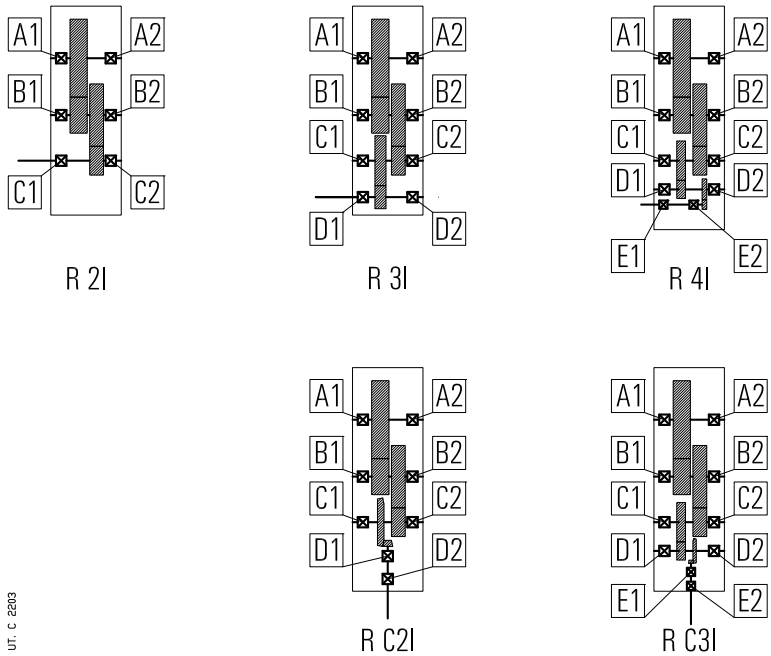

Probe for the remote monitoring of bearing temperature; installation (Buyer's responsibility) in a hole properly pre-arranged, next to a bearing **to be agreed during order phase** (for the most common cases, in order to facilitate the identification of bearing to be monitored, refer to following scheme).

The temperature gauge is realized with a thermo-resistor Pt100 having following features:

- platinum wire with 100 Ω at 0 °C according to EN 60751;
- precision class B according to EN 60751;
- operation temperature field -40 °F - +392 °F (-40 °C ÷ 200 °C);
- max current 40 mA;
- 3 wire connection according to IEC 751 (see fig. on the top);
- stainless steel AISI 316 flat probe; diameter 6 mm;
- stainless steel **sliding** steel .
- cable 1 m long with free end.

For the connection of probe to relevant signalling device CT03 or CT10 (on request, consult us) use a protected section cable ⩾ 1.5 mm^2 positioned separately from power cables.

ATTENTION. Accessory available only after technical feasibility evaluation by Rossi: consult us.

Supplementary description when ordering by **designation**: **bearing temperature probe**

(33) Bearing temperature probe with terminal box and amperometric transducer 4 ÷ 20 m

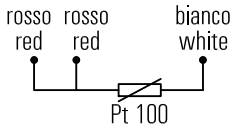

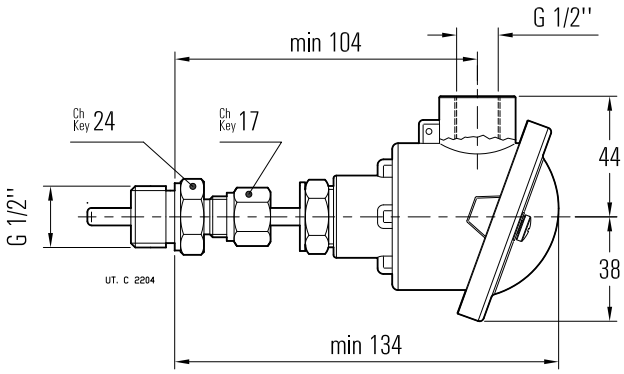

Probe for remote bearing temperature monitoring, with terminal box and amperometric transducer; installation (at Buyer's responsibility) in a threaded hole properly pre-arranged next to a bearing **to be agreed when ordering** (for the most common cases, in order to facilitate the identification of the bearing to be monitored, it is possible to refer to the scheme at (32)).

The temperature gauge is realized with a thermo-resistor Pt100 having following features:

- platinum wire with 100 Ω at32 °F (0 °C) according to EN 60751;
- precision class B according to EN 60751;
- operation temperature field -40 °F - +392 °F (-40 °C ÷ 200 °C);
- 3 wire connection according to IEC 751 (see fig. on the top);
- amperometric transducer with output signal 4 ÷ 20 mA;
- alluminium terminal block (supplied without cable gland);
- IP65 protection;
- input cables G ½";
- stainless steel AISI 316 flat probe; diameter 6 mm;
- stainless steel **sliding** steel .
- cable 1 m long with free end.

For the connection of probe to relevant signalling device CT03 or CT10 (on request, consult us) use a protected section cable ⩾ 1,5 mm² positioned separately from power cables.

ATTENTION. Accessory available only after technical feasibility evaluation by Rossi: consult us.

Supplementary description when ordering by **designation**: bearing temperature probe with **amperometric transducer.**

(34) Bi-metal type thermostat

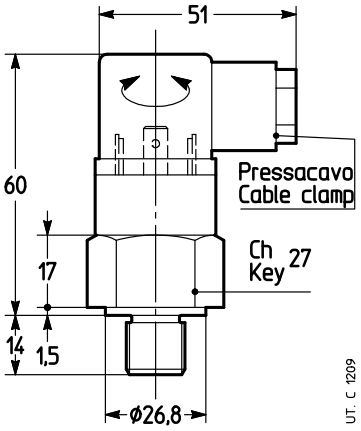

Bi-metal type thermostat for the control of the maximum admissible oil temperature.

Thermostat specifications:

- NC contact with maximum current 10 A 240 V a.c. (5 A - 24 V d.c.);
- G 1/2" thread connection;
- Pg09 DIN 43650 cable cland;
- IP65 protection;
- setting temperature 194 °F ± 41 °F (90 °C ± 5 °C) (other setting temperatures are possible, on request);
- differential temperature 59 °F.

Mounting into a threaded plug (position to be defined according to mounting position and mounting arrangement: consult us) and oil bath lubrication is Buyer's responsibility.

ATTENTION. Accessory available only after technical feasibility evaluation by Rossi: consult us.

Supplementary description when ordering by **designation**: **bi-metal type thermostat**.

(35) Oil level switch with float

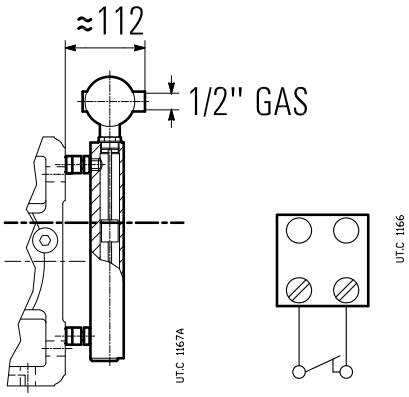

It is a level control device with reed contacts in a supporting stem moved by the magnetic field activated by the magnets included in the float.

The float and the supporting stem are included in a hollow column of not magnetic material connected to the gear reducer housing through communicating vessels.

Connecting features:
- 2 wires connection;
- maximum voltage: 350 V
- maximum current: 1.5 A
- 1 cable input 1/2" UNI 6125 – IP65;
- G 1" brass joint.

The switch is supplied ready for use; when level goes down approx 5 mm, the switch goes on and contact opens.

When filling oil in the gear reducer it is necessary to verify that device is properly calibrated. If any problems occur during this operation contact Rossi.

ATTENTION. Accessory available only after technical feasibility evaluation by Rossi S.p.A.: consult us.
Supplementary description when ordering by **designation: oil level switch with float**

(36) Oil optical probe

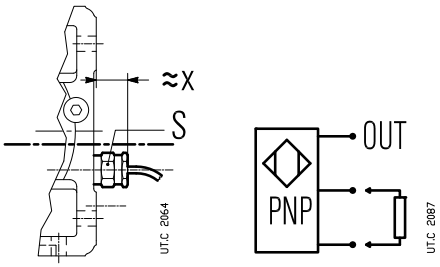

Optical scanner, without mobile parts, for the constant control of oil level, inside the gear reducer at rest (e.g. control before starting the machine or the plant).

Features:
- Stainless steel probe.
- operation temperature range -40 °F - 257 °F (-40 °C ÷ 125 °C);
- d.c. supply 12 ÷ 28 V (other types on request; consult us);
- PNP output (other types on request, consult us), max 100 mA;
- G 1" thread connection;

Supplementary description when ordering by **designation**: **oil optical probe.**

Miscellaneous

– Motor bell housings

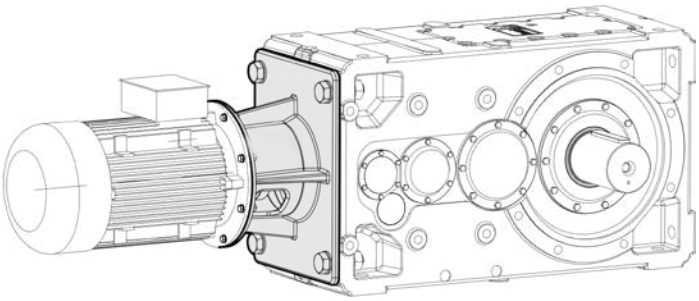

Nodular cast iron bell housing for eletric motor-gear reducer connection through flexible coupling. Available for motor size IEC 100 ... 400; on request also with NEMA motor coupling dimensions.

– Auxiliary drive

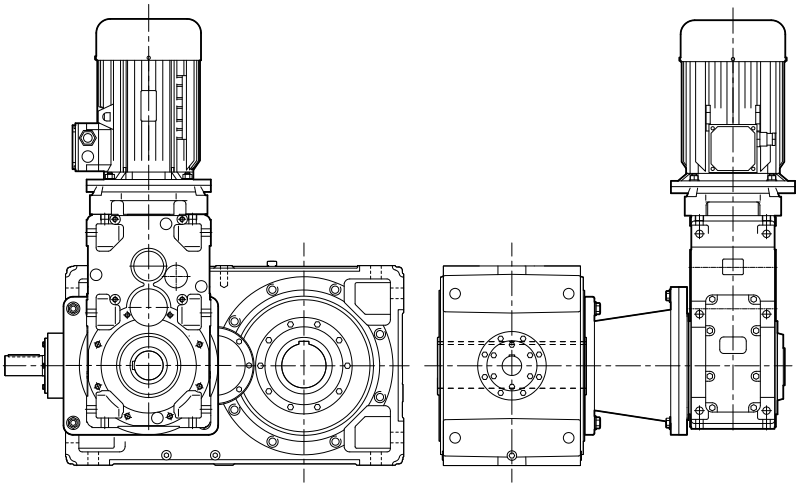

UT.C 2209_Gold

Additional motor drive with bevel helical gearmotor, trains of gears CI, ICI, C2I, connected with main gear reducer through bell, coupling and free wheel.

– Axial fan cooling

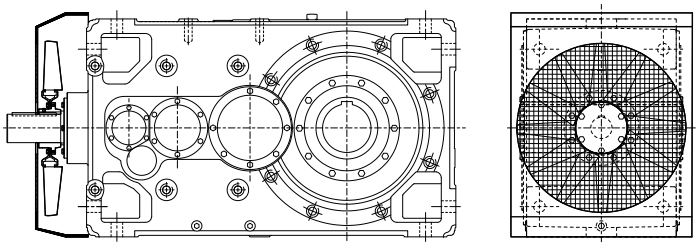

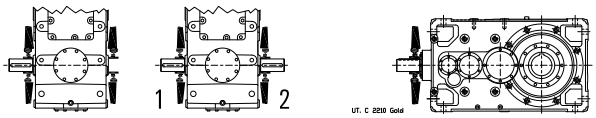

Forced cooling by axial fan for applications with one direction of rotation only (to be specified when ordering); for thermal factor values f_{t1b} see ch. 22. The possible designs are those illustrated below. Dimensions on request: consult us.

– Pump driven by gear reducer

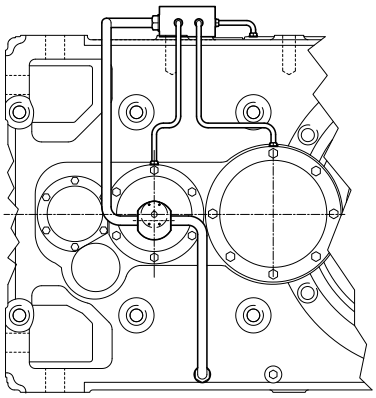

External gear pump driven directly by a gear reducer high speed shaft for the forced lubrication of bearings and/or gears. Self-priming operation, with non-return valve, single acting (one-way applications) or double-acting (bidirectional applications); absence of electrical power; flow rate proportional to the shaft rotational speed of the gear unit. Dimensions and other specifications, on request: consult us.

– Additional intermediate shaft overhung for bevel helical gear reducers

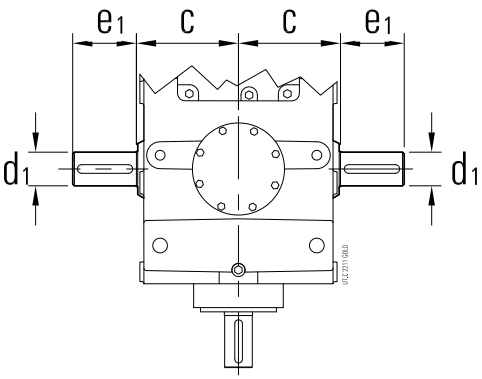

Train of gears	u_{N1} 1)	Nominal transmission ratio i_N	Shaft end dimensions		
			c	d_1 Ø	e_1
C2I	2	$i_N \leqslant 25$	335	90	170
	2,5	$28 \leqslant i_N \leqslant 40$			
	3,15	$45 \leqslant i_N \leqslant 50$			
	4	$56 \leqslant i_N \leqslant 80$			
	5	$i_N \geqslant 90$			
C3I	2	–	325	65	140
	2,5	$i_N = 125$			
	3,15	$160 \leqslant i_N \leqslant 200$			
	4	$i_N \geqslant 250$			
	5	–			

1) Nominal transmission ratio of first reduction stage.

Bevel helical gear reducers can be equipped with a (single or double) shaft overhung on wheel shaft of first reduction stage (bevel wheel) in order to allow the realization of combined units or the application of auxiliary devices (i.e.: external backstop device). Main dimensions of shaft end as per following table (for other dimensions see ch. 24).

In the table are stated the nominal transmission ratios of first reduction stage – according to total transmission ratios – with which it is possible to calculate the rotation speed of the auxiliary overhung.

– Low speed shaft with flange coupling for shaft mounting arrangements

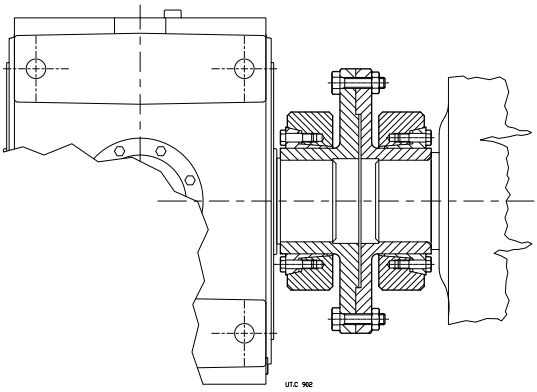

Low speed cylindrical shaft without keyway for application of a flange coupling for drive unit shaft mounting.

– Pre-arrangement for vibration monitoring devices

Position, number and dimension of holes to be agreed when ordering.

– Ex Gear reducer design ATEX II 2 GD and 3 GD (sizes 400, 401)

Helical and bevel helical gear reducers and gearmotors may be supplied according to Directive ATEX in order to be used in potentially explosive atmospheres – category **2 GD** (for operation in zones 1 (gas), 21 (dust): **probable** presence of explosive atmosphere) and **3 GD** (for operation in zones 2 (gas), 22 (dust): **improbable** presence of explosive atmosphere) – with surface temperature T 135 °C (T4).

These are the main variations of the product:

– fluoro-rubber seal rings;
– metal plugs; filler plug with filter and valve;
– special name plate with ATEX mark and indication of application limits;
– external protection based on a water-soluble dual-compound polyrethane **conductive** enamel, **color grey** RAL 7040, corrosivity class C3 ISO 12944-2;
– «ATEX instructions» manual.

For category **2 GD**[1], depending on **minimum control intervals**, also:

2 GD monthly control

– double seal rings on low speed shaft;

2 GD quarterly control:

– double seal rings on low speed shaft;
– oil temperature probe;
– possible bearing temperature probes.

This solution is advisable when the gear reducer has difficult access or when a decrease in control frequency is desired.

Temperature range: -20 ÷ +104 °F (0 ÷ +40 °C) for gear reducers supplied with bearing lubrication pump.

The «**ATEX instructions**» (with the additional documentation, if any) are **integral part of the supply of each gear reducer**; every indication stated in it must be carefully applied. Consult us if need be.

Attention. In the following cases ATEX design of gear reducer is incompatible with accessories and non-standard designs:

Accessory or non-standard design	Gear reducer ATEX II design	
	2 GD	**3 GD**
Hollow low speed shaft with shrink disc (6)	●	●
Optional paint according to cycles 3H..., 2I..., 2L... (24)	○	○
Heater (25)	○	○
Independent cooling unit (29)	–	–
Oil temperature probes (30) (31)	○	○
Bearing temperature probes (32) (33)	○	○
Bi-metal type thermostat (34)	–	–
Oil level switch with float (35)	2)	●

– Not available.
● Available.
○ Available but in ATEX design suitable for gear reducer's ATEX design and for use purpose and area.
1) The presence of bearing lubrication pump requires one or more additional bearing temperature probes.
2) This accessory is available for category 2 G (zone 1) only.
3) When determining f_1 consider the value of f_{14} (see page 28) **never exceeding 1**.

Gear reducer size selection

Determine the size of gear reducer as indicated in ch. 5 considering following additional indications:

- **maximum input speed $n_1 \leq$ 1 500 rpm**; for other input speed, consult us.
- **service factor required** determined as per ch. 3, increased by table correction factor fs_{ATEX} (see table 1) and anyway **never lower than 1**; in presence of a hollow shaft with shrink disc (6) verify that maximim peak torque is always lower than T_{2SD} / $f_{S\,ATEX}$ (for T_{2SD} values see ch. 17(6)).
- thermal power Pt verified as per ch. 4 according to nominal thermal power Pt_N increased by thermal factors ft_1[1] ... ft_4 and ft_{ATEX} corrective factor(see table 1).

Table 1 - Corrective factors for ATEX design of service factor required and of nominal thermal power

Category	fs_{ATEX}	ft_{ATEX}
2 GD	1,18	0,8 (0,71 for I and CI)
3 GD	1,06	0,9 (0,8 for I and CI)

1) When determining ft_1 consider a value of ft_{1a} (see page 28) **never exceeding 1**

Supplementary description when ordering by **designation**[2]:

design ATEX II ...

... 3 GD T4

... 2 GD T4 monthly control

... 2 GD T4 quarterly control

2) This designation, in case of gearmotor, refers to the gear reducer part only.

31 - Installation and maintenance

31.1 Safety 452
31.2 Application conditions and use limits 452
31.3 General 452
31.4 Shaft end of driven machine 453
31.5 Fitting of components to shaft end 454
31.6 Hollow low speed shaft 454
31.7 Lubrication 455
31.8 Gear reducer starting at low ambient temperature ($T_{amb} = T_{oil} \leqslant 77$ °F) 455
31.9 Shaft-mounting arrangements 456
31.10 Tightening torque 456

31.1 - Safety

IMPORTANT: gear reducers and gearmotors supplied by Rossi are **components** and must be incorporated into machinery and **should not be commissioned before the machinery in which the components have been incorporated conforms to:**

- **Machinery directive 2006/42/EC and subsequent updatings; in particular, possible safety guards for shaft ends not being used and for eventually accessible fan cover passages (or other) are the Buyer's responsibility;**
- **«Electromagnetic compatibility (EMC)» 2004/108/EC and subsequent updatings.**

Attention! It is recommended to pay attention to all instructions of present handbook, all existing safety laws and standards concerning correct installation. Whenever personal injury or property damage may occur, foresee adequate supplementary protection devices against:

- **release or breakage of fastening screws;**
- **rotation or unthreading of the gear reducer from shaft end of driven machine following to accidental breakage of the reaction arrangement;**
- **the accidental breakage of shaft end of driven machine.**

If deviations from normal operation occur (temperature increase, unusual noise, etc.) immediately switch off the machine.

Installation

An incorrect installation, an improper use, the removing or disconnection of protection devices, the lack of inspections and maintenance, improper connections may cause severe personal injury or property damage. Therefore the component must be moved, installed, commissioned, handled, controlled, serviced and repaired **exclusively by responsible qualified personnel specifically instructed** and have the necessary experience to **recognize** any **risks** connected with present products avoiding any possible emergencies.

Gear reducers and gearmotors of present handbook are normally suitable for installations in industrial areas: additional protection measures, if necessary, must be adopted and assured by the personnel responsible for the installation.

Attention! Components in non-standard design or with special executions or with constructive variations may differ in the details from the ones described here following and may require additional information.

Attention! For the installation, use and maintenance of the **electric motor** of the possible motor-variator and/or the electric supply device (frequency converter, soft-start, etc.), and/or any optional electric devices (e.g.: independent cooling unit, etc.), consult the specific attached documentation.

If necessary, require it.

Maintenance

When operating on gear reducer or on components connected to it the machine must be at rest: disconnect motor (including auxiliary equipments) from power supply, gear reducer from load, be sure that safety systems are on against any accidental starting and, if necessary, pre-arrange mechanical locking devices (to be removed before commissioning).

Attention! During the running the gear reducers could have hot surfaces; Always wait that the gear reducer or the gearmotor to cool before carrying out any operations.

Further technical documentation can be downloaded from our website www.rossi.com.

31.2 - Application conditions and use limits

Gear reducers are designed for **industrial applications according to name plate data**, when no vibrations (permissible vibration velocity: v_{eff} < 0.012 ft/s for $P_1 \leqslant$ 20 hp, v_{eff} < 0.015 ft/s for P_1 > 20 hp), no nuclear radiations and important magnetic fields, with **ambient temperature -4 - +104 °F (-20 - +40 °C)** (with peaks at +122 °F, i.e. +50 °C), with air velocity ⩾ 4 ft/s, maximum altitude 3280 ft (1 000 m), and max relative humidity 80 % .

For continuative ambient temperature higher than 104 °F (40 °C) or lower than -4 °F (-20 °C) consult us.

31.3 - General

Be sure that the structure on which gear reducer or gearmotor is fitted is plane, levelled and sufficiently dimensioned in order to assure fitting stability and vibration absence, keeping in mind all transmitted forces due to the masses, to the torque, to the radial and axial loads.

Position the gear reducer or gearmotor so as to allow a free passage of air for cooling both gear reducer and motor (especially at gear reducer and motor fan sides).

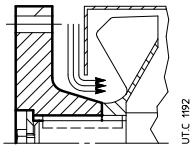

If there is fan on the gear reducer verify that there is sufficient space allowing for adequate circulation of cooling air also after fitting coupling protection. If a coupling protection is fitted, smooth the coupling hub, if necessary.

Avoid: any obstruction to the air-flow; heat sources near the gear reducer that might affect the temperature of cooling-air and of gear reducer for radiation; insufficient air recycle or any other factor hindering the steady dissipation of heat.

Mount the gear reducer so as not to receive vibrations.

When external loads are present use pins or locking blocks, if necessary.

When fitting gear reducer and machine it is recommanded to use **locking adhesives** such as LOCTITE on the fastening screws (also on flange mating surfaces).

For outdoor installation or in a hostile environment protect the gear reducer or gearmotor with anticorrosion paint. Added protection may be afforded by water-repellent grease (especially around the rotary seating of seal rings and the accessible zones of shaft end).

Gear reducers should be protected wherever possible, and by whatever appropriate means, from solar radiation and extremes of weather; weather protection **becomes essential** when high or low speed shafts are vertically disposed.

For ambient temperatures higher than 104 °F (40 °C) or lower than 32 °F (0 °C), consult us.

If overloads are imposed for long periods or if shocks or danger of jamming are envisaged, then motor-protection, electronic torque limiters, fluid couplings, safety couplings, control units or other similar devices should be fitted.

Attention! Bearing life, good shaft and coupling running depend on alignment precision between the shafts. Carefully align the gear reducer with the motor and the driven machine (with the aid of shims if need be), interposing flexible couplings whenever possible.

Whenever a leakage of lubricant could cause heavy damages, increase the frequency of inspections and/or envisage appropriate control devices (e.g.: remote oil level gauge, lubricant for food industry, etc.).

In polluting surroundings, take suitable precautions against lubricant contamination through seal rings or other.

31.4 - Shaft machine of driven machine

Dimensions of **machine shaft end**, which the gear reducers's hollow shaft is to be fitted to, are those recommended in the table and shown in the figure.

Important: the shoulder diameter of the driven machine shaft end abutting with the gear reducer must be at least **(1,18 - 1,25) · D.**

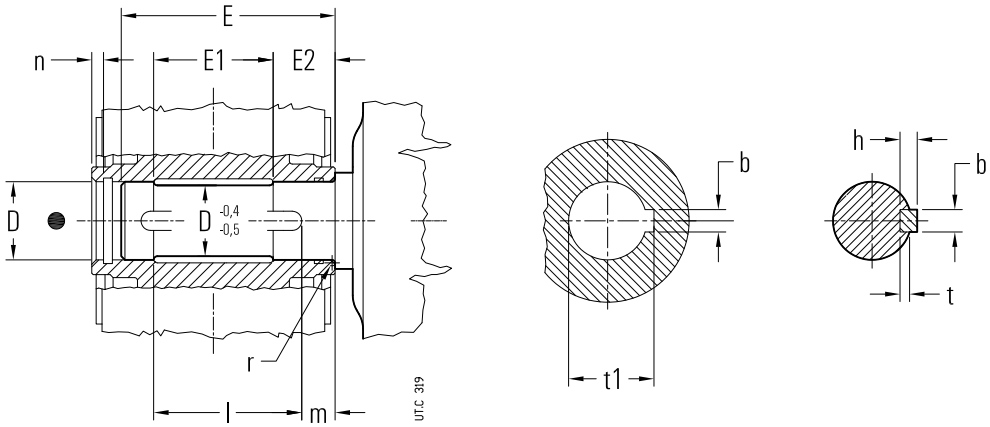

Gear reducer size	Hollow shaft		Shaft end of driven machine						Parallel key	Keyway		
	D	**n**	**E**	**E_1**	**E_2**		**m**	**r**	**b × h × l**	**b**	**t**	**t_1**
	Ø		2)		2)	1) 2)			h9 h11	$H9_{hub}$		
	H7 / h6, j6									$N9_{shaft}$	shaft	hub
400, 401	200	14	620	300	165	130	10	5	45 × 25 × 600	45	15	210,4

1) Values valid for **R 4I**.

2) In presence of «Low speed shaft seal with labyrinth and grease feeder» (ch. 30 (26)) it is necessary to increase the dimension E (E2) of quantity A stated in the table on ch. 30 (26).

31.5 - Mounting of components on high and low speed shaft

Generally, it is recommended to machine the hole of parts keyed onto shaft end, tolerance H7. For high speed shaft end with D ⩾ 55mm, tolerance can be G7, provided that load is uniform and light. Further data according to the table «High and low speed shaft end» (ch. 24).

Before mounting, thoroughly clean mating surfaces with proper antirust products, and lubricate against seizure and fretting corrosion.

With hollow low speed shaft with **shrink disc on machine opposite side** it is necessary to protect the cylindrical portion of machine shaft end on **shrink disc opposite side** using adequate products against fretting corrosion.

Installation and removal operations should be carried out with the aid of jacking screws and pullers using the tapped hole at the shaft butt-end (see table in fig. 2) taking care to avoid impacts and shocks which may irreparably damage the bearings, the circlips or other parts or cause sparks; for H7/m6 and K7/j6 fits it is advisable that the part to be keyed is preheated to a temperature of 176 - 212 °F (80 - 100 °C).

The couplings having a tip speed on external diameter up to 66 ft/s must be statically balanced; for higher tip speeds they must be dynamically balanced.

Where the transmission link between gear reducer and machine or motor generates shaft end loads, ensure that: loads do not rise above catalog values:

- loads do not rise above the values stated at ch. 29 and loads do not rise above the values of the application design;
- transmission overhang is kept to a minimum;
- drive-chains should not be tensioned (if necessary – alternating loads and/or motion – foresee suitable chain tighteners); if the peripheral speed of the chain is greater than 3.3 ft/s it is necessary to install proper malfunction markers such as aligning sensors, etc.
- in the gear transmission there is an adequate gear mesh (≈ 0,03 - 0,04 · m) between pinion and rack (bushing).
- drive-belts should not be over-tensioned.

For splined couplings apply adequate products against oxydation.

31.6 - Hollow low speed shaft

In order to have an easier installing and removing, proceed as per the drawings a, b, respectively.

For the axial fastening it is possible to adopt the system as per fig. c, d. When shaft end of driven machine has no shoulder, a spacer may be located between the retaining ring and the shaft end itself.

The machine shaft end must be as stated at ch. 31.4 (ch. 30 (5) and 30 (6) in case of stepped hollow low speed shaft or shrink disc). For vertical ceiling-type mounting, contact us.

On request it is possible to supply (ch. 30 (20)) a washer for the mounting, disassembling and the axial fastening of gear reducer. Parts in contact with the retaining ring must have sharp edges. When tightening the bolt, we recommend the use of a locking adhesive LOCTITE 601.

Whenever **personal injury** or **property damage** may occur, foresee **adequate supplementary protection devices against**:

- **the rotation or unthreading of gear reducer** from machine shaft end following to accidental breakage of the reaction arrangement;
- **accidental breakage of shaft end of driven machine.**

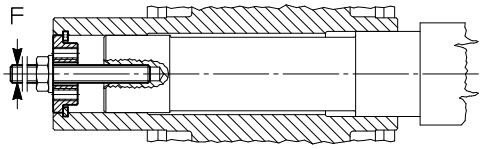

a) installing

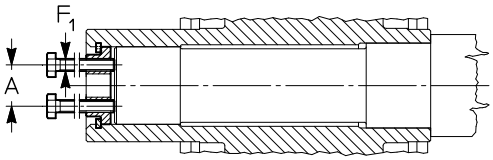

b) removing

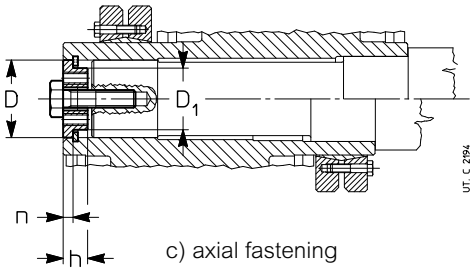

c) axial fastening

Gear reducer size	A		D		D_1		F	F_1	h	n	Bolt for axial fastening UNI 5737-88
		1)	Ø	Ø 1)	Ø	1)					
400, 401	144	134	210	200	180	170	M30	M24	34	14	M30 × 90

1) Dimension valid for design with hollow low speed shaft with keyway.

31.7 - Lubrication

Gear pairs are oil-bath lubricated.

Bearings are either oil-bathed or splashed with the exception of the top bearings which are lubricated with a pump (see ch. 30 (19)) or lubricated «for life» with grease (with or without NILOS ring according to speed).

Gear reducers are supplied **without oil**; before putting into service, fill to the specified level with **mineral oil** with **EP** (extreme pressure) **additives**, having the ISO viscosity grade given in the table, according to ambient temperature and output speed. Under normal conditions the first and the second speed range are for train of gears **2I**, the third is for trains of gears **3I**, **4I**, **C2I**, **C3I** and the fourth is for particular applications.

When it is required to increase oil change interval («long life»), the ambient temperature range, and/or to reduce oil temperature, use PAO polyalphaolefine based **synthetic oil** with **EP** (extreme pressure) **additives**, having ISO viscosity grade as indicated in the table.

For continuous duty, the use of synthetic oil is recommended in the following case of gear reducers with size and mounting position marked with (see ch. 26, 28) and bevel helical gear reducers with double extension high speed shaft. An overall guide to oil-change interval is given in the table, and assumes pollution-free surroundings. When heavy overloads are present, halve the values.

Apart from running hours:
— replace mineral oil at least each 3 years;
— replace or regenerate synthetic oil each 5 ÷ 8 years according to gear reducer size, running and environmental conditions.

Never mix different makes of synthetic oil; if oil-PAO polyalphaolefine based **synthetic oil** with **EP** (extreme pressure) **additives**, change involves switching to a type different from that used hitherto, then give the gear reducer a through clean-out.

Seal rings: duration depends on several factors such as dragging speed, temperature, ambient conditions, etc.: as a rough guide, it can vary from 3 150 to 25 000 h.

ISO viscosity grade
Mean kinematic viscosity [cSt] at 104 °F (40 °C).

Speed n_2 min^{-1}	Ambient temperature[1] [°F]				
	mineral oil			synthetic oil	
	-4 - 32 °F -20 - 0 °C	32 - 68 °F 0 - 20 °C	68 - 104 °F 20 - 40 °C	-4 - 32 °F -20 - 0 °C	32 - 104 °F 0 - 40 °C
> **224**	150	150	150	150	150
224 ÷ 22,4	150	150	220	150	220
22.4 ÷ 5,6	150	220	320	220	320
< **5,6**	220	320	460	320	460

Oil temperature		Oil-change interval [h]	
°F	°C	mineral oil	oil synthetic
⩽ **149**	⩽ **65**	8 000	25 000
149 ÷ 176	**65 ÷ 80**	4 000	18 000
176 ÷ 203	**80 ÷ 95**	2 000	12 500
203 ÷ 230[2]	**95 ÷ 110**[2]	–	9 000

Oil list table

Manufacturer	**PAO synthetic oil** ISO VG 150 ... 460	Mineral Oil ISO VG 150 ... 460
ENI	Blasia SX	Blasia
ARAL	Degol PAS	Degol BG
BP	Enersyn EPX	Energol GR XP
CASTROL	Alphasyn EP	Alpha SP
FUCHS	Renolin Unisys CLP	Renolin CLP
KLÜBER	Klübersynth GEM4	Klüberoil GEM 1
MOBIL	Mobil SHC Gear	Mobilgear 600 XP
SHELL	Omala S4 GX / S4 GXV	Omala S2 G/ S2GV
CHEVRON	Pinnacle	Meropa
TOTAL	Carter SH	Carter EP

Warning: before unscrewing the filler plug with valve (symbol) wait until the unit has cooled and then open with caution.

31.8 - Gear reducer starting at low ambient temperature ($T_{amb} = T_{oil} \leqslant$ 77 °F (25 °C))

The **minimum** ambient temperature (matching with the oil temperature) to which it is allowed to start the gear reducer depends from lubrication system and from lubricant type.

Gear reducers with splash lubrication

The gear reducer can be started with oil/ambient temperature ⩾ - 4 °F (- 20 °C), keeping in mind to follow all lubricant viscosity instructions as per previous paragraph («Lubrication»).

In presence of an eventual independent cooling unit with heat exchanger (but without forced lubrication), it is necessary to start the motor pump when achieving the oil temperature of 140 °F (60 °C).

Gear reducers with forced bearing lubrication

In presence of forced bearing lubrication systems (s. ch. 24 and ch. 30 (8) and (9)), the gear reducer can be started only if oil temperature is ⩾ 77 °F (25 °C), respecting all lubricant viscosity instructions as per ch. 31.6.

Therefore, before starting the gear reducer it is necessary to preheat the oil bath using heaters (see ch. 30 (10)) up to achieving a temperature of 77 °F (25 °C).

1) Peaks of 18 °F (10 °C) below and 18 °F (10 °C) above the ambient temperature range are acceptable. For the running at **low temperature starting** ($T_{amb} = T_{oil} \leqslant$ 77 °F (25 °C)) and **forced lubrication**, **foresee always the heater** of **oil pre-heating** (see ch. 31.7).

2) Values admitted only for non continuous duty.

31.9 - Shaft mounting arrangements

The strength and shape of the housing offer **advantageous** possibilities for shaft mounting even – for instance – in the case of gearmotor with belt drive, hydraulic coupling, etc.

A few possible examples of shaft mounting arrangements are shown.

IMPORTANT. When shaft mounted, the gear reducer must be supported both axially and radially (also for mounting positions B3 ... B8) by the machine shaft end, as well as anchored against rotation only, by means of a reaction having **freedom of axial movement** and **sufficient clearance** in its couplings to permit minor oscillations always in evidence without provoking dangerous overloading on the gear reducer. Lubricate with proper products the hinges and the parts subject to sliding; when mounting the screws it is recommended to apply locking adhesives type LOCTITE 601.

In case of axial fastening with elastic constraint, in B3 or B8 mounting position, ensure that housing oscillation while running does not exceed the perfectly horizontal position.

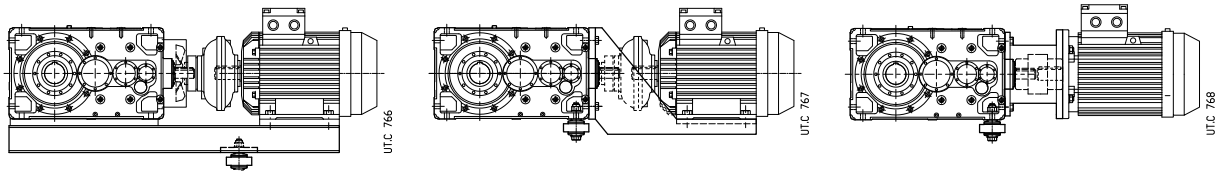

Semi flexible and economic reaction arrangement (see ch. 30.7): with bolt using disc springs.

31.10 - Tightening torque

Unless otherwise stated, usually it is sufficient to use screws in class 8.8;

Before tightening the bolt be sure that the eventual centering of flanges are inserted properly

In general, the bolts are to be diagonally tightened with the maximum tightening torque.

The bolts of shrink disc must be gradually and uniformly tightened, with continuous sequence (not diagonally!) and in several phases up to the reaching of maximum tightening torque.

Before tightening, carefully degrease the screws; in the event of heavy vibrations, heavy duties, frequent drive inversions apply a proper thread-locking sealant Loxeal 23-18 or equivalent.

Screws	Tightening torques *T*s [lb in]			
	Feet, flanges and tapped butt-end holes			Shrink disc
ANSI B18.2.1 (DIN 931) ANSI B18.3 (DIN 912)	Class 8.8 Grade 5	Class 10.9 Grade 8	Class 12.9 FNL Grade 9	Class 10.9 Grade 8
M10	445	620	750	–
M12	750	1060	1280	–
M16	1810	2570	3100	–
M20	3540	4960	6020	4340
M24	6280	8850	10600	7430
M30	12200	17250	20800	–
M36	22150	31400	37150	–
M45	44250	61950	74350	–
M56	86750	122100	146000	–

Page intentionally left blank.

Page intentionally left blank.

G series Drive units on swing base

Section contents

32 – Drive units on swing base 459

32 - Drive units on swing base

Specifications

Drive units are composed of an **electric motor** and a **right angle shaft gearbox** both in B3 mounting position (horizontal shafts), assembled on a **swing base** made of electrically-welded and annealed steel properly sized, and connected through a coupling.

The **coupling** can be of different types: flexible, basic hydraulic, or hydraulic with simple or double delayed fill chamber. Both types of coupling can be supplied with drum pulley for **failsafe shoe brake**. On request the option with disc brake is also available.

Both the coupling and the safety or parking brake (if any) are protected with a steel **guard** fixed to the swing base.

The swing base includes the reaction point with elastic bush for shaft-mounting. The **reaction point**, complete with screws kit for fixing to the swing base, is supplied separately, and assembling is up to Customer.

Drive unit painting is realized with synthetic paint suitable for resistance to normal industrial environments, and for the application of further coats of synthetic paint; final colour blue RAL 5010 DIN 1843.

Gear reducer

The right angle shaft gear reducer belongs to the standard Rossi production program, characterized by:

- Manufacturing and product management flexibility
- High manufacturing quality standard
- High, reliable and tested performances
- Wide range of sizes and trains of gears in order to meet Customer and application needs
- Strength, accuracy and reliability enhanced through modern design, manufacturing and operating criteria
- Reduced maintenance

Performance, dimensions and design features can be found on the relevant pages of this catalog.

All the gearboxes are designed to transmit high nominal and maximum output torque, and to withstand high external loads.

The standard arrangement for this type of drive units is shaft mounted, with gearbox with hollow low speed shaft. Connection between gearbox and machine shaft is possible with keyway or shrink disc. On request it is possible to supply covers for rotating parts.

As alternative the option for shaft mounting with solid cylindrical low speed shaft, complete with rigid flanged coupling, is available.

For further details about dimensions, matching features and available options please refer to specific catalogs.

Swing base

The swing base structure is made of hollow profiles (gearbox sizes 140 ... 225) or beams (gearbox sizes 250 ... 360), appropriately combined, treated and machined.

The project is made to maximize the swing base strength, in order to optimize costs and performance.

All swing bases have been verified for bending, considering the highest load condition among the ones foreseen on this catalog.

On each swing plate there are machined surfaces for fitting and jacking screws for alignment of the components of the drive unit. All Rossi components are supplied already assembled and aligned on the swing base.

The matching point for the reaction arm has been defined in order to optimize the swing base fixing, so to minimize the stress on swing base and transmission components.

The standard supply includes the reaction point with elastic bush supplied separately (assembly is up to Customer). If necessary the complete reaction arm can be quoted and supplied, subject to agreement with Customer about characteristics and dimensions.

Selection

The motor - gear reducer combinations have been made considering a minimum service factor 1,4. For further details about the relation between service factor, nature of load and life time of the gear reducer please refer to the selection tables of this catalog.

In any case **gear reducer selection has to be realized according to descriptions and prescriptions contained in Rossi catalogs for each specific application.**

Dimensions and masses

In order to calculate the overall dimensions of the drive unit first of all it is necessary to identify type and size of the transmission components.

The drive unit has been considered as composed of two sub-groups:

- **motor sub-group**, including electric motor, coupling with brake drum (if any), brake (if any) and protection guard for coupling and brake
- **gear reducer sub-group**, including gear reducer and swing base with reaction point

From page 460 to page 463 the motor sub-group dimensions can be found in all the available options, according to coupling type, size and type of motor.

From page 464 to page 467 the gear reducer sub-group dimensions can be found, according to train of gears and gear reducer size, and considering a possible fan fitted on the gearbox high speed shaft.

In same case, according to motor number of poles and to nominal supply frequency, a different choice of the hydraulic coupling becomes necessary and therefore A dimensions change consequently; details are given at page 468.

The dimensional data reported in the above mentioned two sections, combined according to picture below, allow the complete identification of the drive unit overall dimensions.

The masses stated in the dimensional tables, in both motor and gear reducer subgroups separately, are indicative, and then the total drive unit mass has to be considered only as a reference to identify the suitable and needed tools to lift the complete drive unit. **We strongly recommend to size the lifting tools with a safety margin of 25% in relation to the indicative value reported on the catalog.** Concerning the lifting please follow instructions given on page 470.

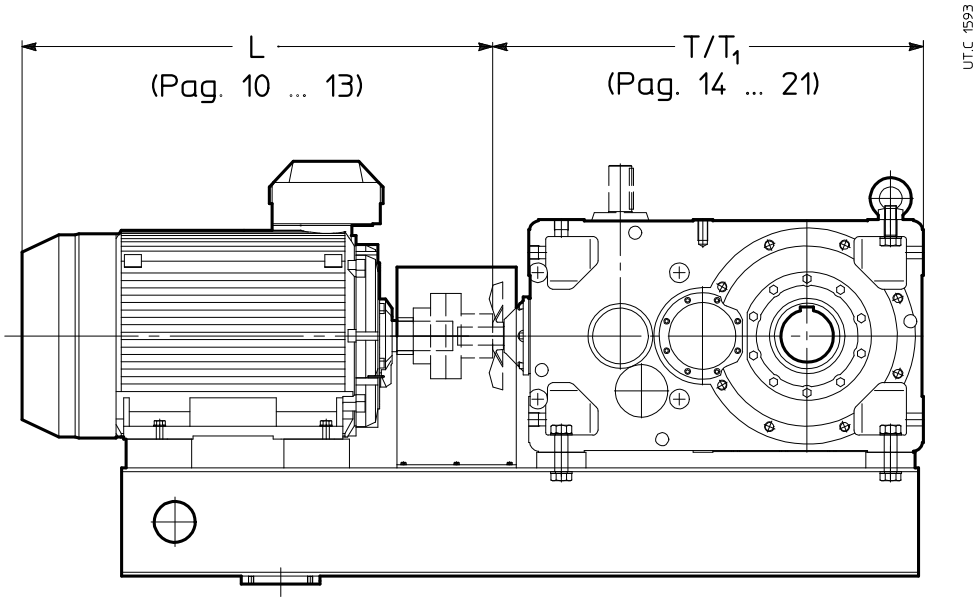

Dimensions and masses - **Motor sub-group**

With **flexible coupling**

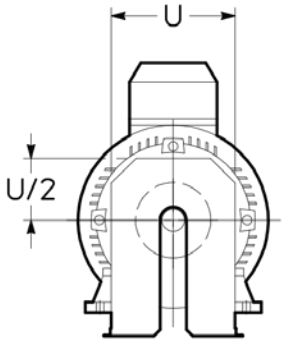

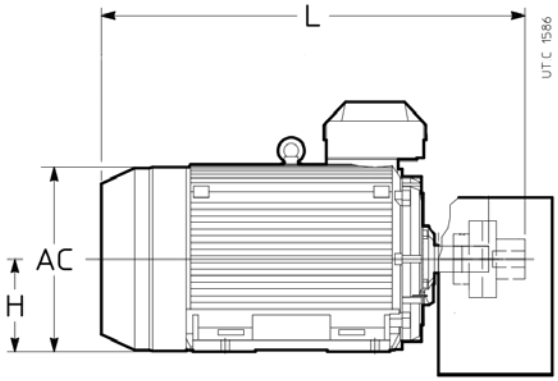

With **flexible coupling** and **shoe brake**

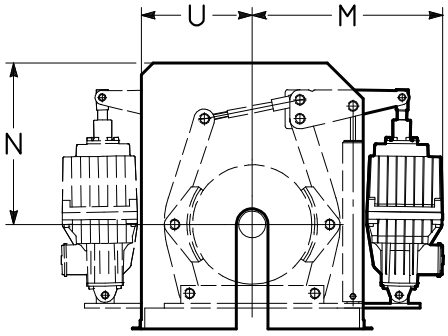

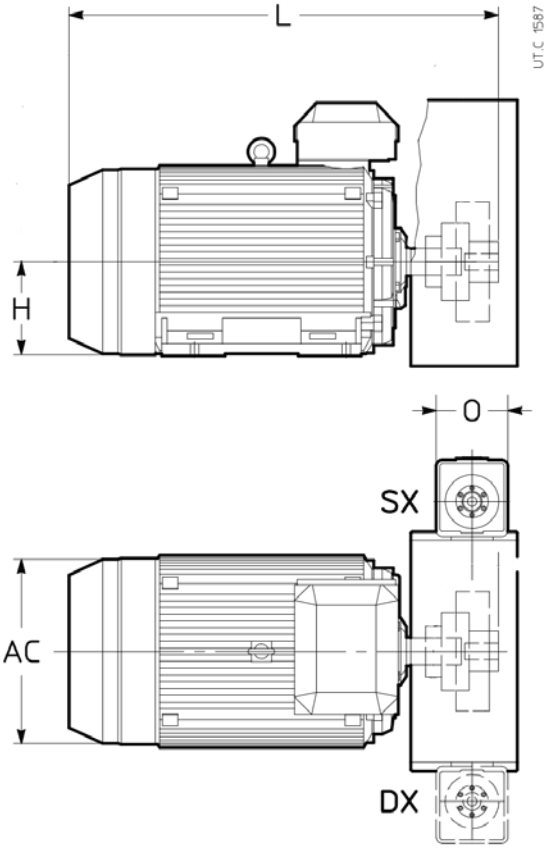

Brake with thruster fitted on left side (seen from motor fan side); on request on right side

Dimensions and masses - Motor sub-group

4 poles with flexible coupling

P_N 50 Hz hp	P_N 50 Hz kW	P_N 60 Hz hp	P_N 60 Hz kW	Motor		AC Ø ~	H 2)	M	N	O	U	L ~	Mass lb 1)
7.5	5,5	**9**	6,6	**132**	**4**	258	132	–	–	–	190	537	135
10	7,5	**12**	9	**132**	**4**	258	132	–	–	–	190	537	155
12.5	9,2	**15**	11	**132**	**4**	258	132	–	–	–	190	575	180
15	11	**18**	13,2	**160**	**4**	314	160	427	320	160	190	720	310
20	15	**24**	18	**160**	**4**	314	160	427	320	160	190	720	330
25	18,5	**30**	22,2	**180**	**4**	314	180	427	320	160	190	731	350
30	22	**36**	26,4	**180**	**4**	354	180	427	320	160	190	806	400
40	30	**48**	36	**200**	**4**	354	200	427	393	160	260	816	510
50	37	**60**	44,4	**225**	**4**	411	225	474	393	160	260	923	660
60	45	**72**	54	**225**	**4**	411	225	502	393	190	260	923	730
75	55	**90**	44,4	**250**	**4**	411	250	502	393	190	260	923	820
100	75	**125**	90	**280**	**4**	490	280	568	412	190	260	1 062	1125
125	90	**150**	108	**280**	**4**	490	280	568	412	190	260	1 062	1280
150	110	**180**	132	**315**	**4**	490	315	642	542	190	330	1 112	1500
180	132	**216**	158	**315**	**4**	604	315	642	542	190	330	1 255	2140
220	160	**264**	192	**315**	**4**	604	315	642	542	240	330	1 255	2315
270	200	**324**	240	**315**	**4**	604	315	642	542	240	330	1 366	2760
340	250	**408**	300	**355**	**4**	770	355	642	542	240	330	1 679	4300
425	315	**510**	378	**355**	**4**	770	355	–	–	–	440	1 700	4410
480	355	**576**	426	**355**	**4**	770	355	–	–	–	440	1 900	4850
540	400	**648**	480	**355**	**4**	770	355	–	–	–	440	1 900	5180
610	450	**732**	540	**355**	**4**	770	355	–	–	–	440	1 900	5400
680	500	**816**	600	**355**	**4**	770	355	–	–	–	440	1 900	5650
760	560	**912**	672	**400**	**4**	850	400	–	–	–	440	2 155	6285

6 poles with flexible coupling

P_N 50 Hz hp	P_N 50 Hz kW	P_N 60 Hz hp	P_N 60 Hz kW	Motor		AC Ø ~	H 2)	M	N	O	U	L ~	Mass lb 1)
5.5	4	**6.6**	4,8	**132**	**6**	258	132	–	–	–	190	537	155
7.5	5,5	**9**	6,6	**132**	**6**	258	132	–	–	–	190	575	180
10	7,5	**12**	9	**160**	**6**	314	160	427	320	160	190	720	290
15	11	**18**	13,2	**160**	**6**	314	160	427	320	160	190	720	310
20	15	**24**	18	**180**	**6**	354	180	474	393	160	190	806	420
30	22	**36**	26,4	**200**	**6**	354	200	474	393	160	260	816	510
40	30	**48**	36	**225**	**6**	411	225	568	412	190	260	923	775
50	37	**60**	44,4	**250**	**6**	411	250	568	412	190	260	923	885
60	45	**72**	54	**280**	**6**	490	280	568	412	190	260	1062	1015
75	55	**90**	66	**280**	**6**	490	280	642	542	190	260	1062	1235
100	75	**120**	90	**315**	**6**	490	315	642	542	190	330	1 112	1455
125	90	**150**	108	**315**	**6**	604	315	642	542	190	330	1 255	2075
180	132	**216**	158	**315**	**6**	604	315	642	542	240	330	1 255	2425
220	160	**264**	192	**315**	**6**	604	315	642	542	–	330	1 366	2465
270	200	**324**	240	**355**	**6**	770	355	–	–	–	330	1 679	3860
340	250	**408**	300	**355**	**6**	770	355	–	–	–	440	1 700	4410
425	315	**510**	378	**355**	**6**	770	355	–	–	–	440	1 900	5400
480	355	**576**	426	**355**	**6**	770	355	–	–	–	440	1 900	5515
540	400	**648**	480	**400**	**6**	850	400	–	–	–	440	2 155	6285
610	450	**732**	540	**400**	**6**	850	400	–	–	–	440	2 155	6615
680	500	**816**	600	**400**	**6**	850	400	–	–	–	440	2 155	7165

1) Masses are indicative. In order to obtain the total mass of the drive unit add to this value the mass relative to the gear reducer sub-group.
2) Tolerance: up to size 250 $-^{0}_{0,5}$ mm, for sizes > 280 $-^{0}_{1}$ mm.

Dimensions and masses - Motor sub-group

With **hydraulic coupling**

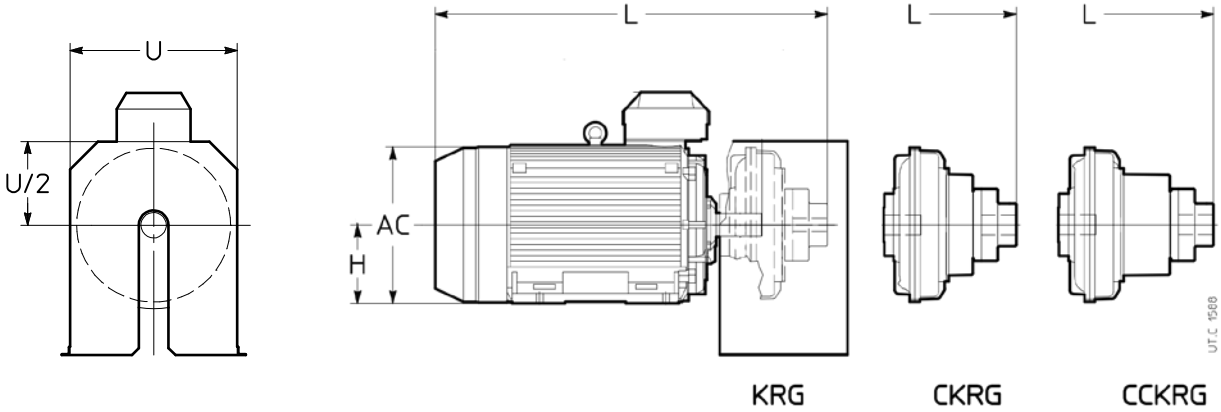

KRG	CKRG	CCKRG
basic type, with no delayed fill chamber	with simple delayed fill chamber	with double delayed fill chamber

With **hydraulic coupling** and **shoe brake**

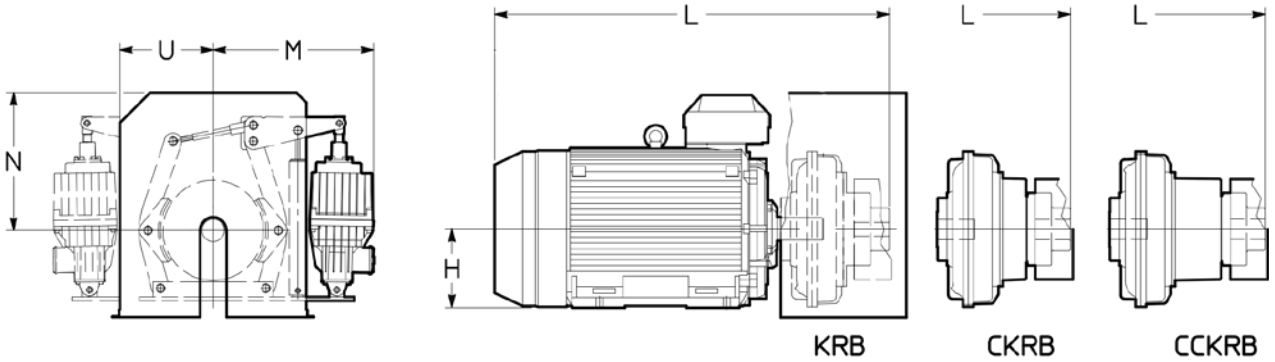

KRB	CKRB	CCKRB
basic type, with no delayed fill chamber, with brake drum	with simple delayed fill chamber and brake drum	with double delayed fill chamber and brake drum

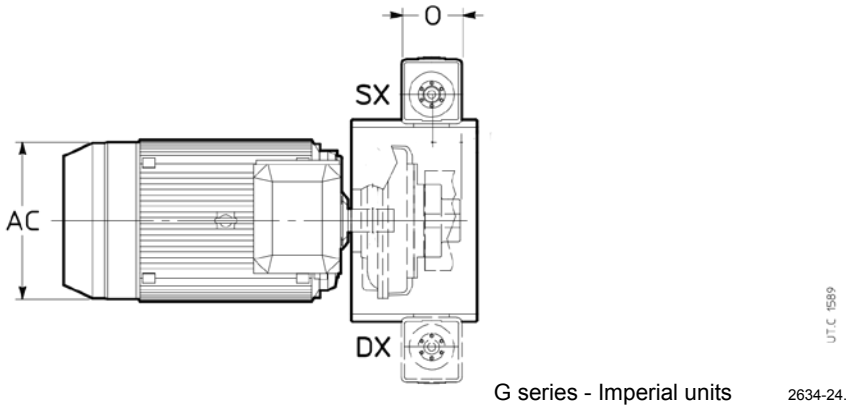

Dimensions and masses - Motor sub-group

4 poles with hydraulic coupling

P_N 50 Hz hp	P_N 50 Hz kW	P_N 60 Hz hp	P_N 60 Hz kW	Motor		AC Ø ~	H 2)	M	N	O	U	L ~ KR... 50 Hz	L ~ CKR... 50 Hz	L ~ CCKR... 50 Hz	L ~ KR... 60 Hz	L ~ CKR... 60 Hz	L ~ CCKR... 60 Hz	Mass lb 1)
7.5	5,5	**9**	6,6	**132**	**4**	258	132	–	–	–	330	631	–	–	631	–	–	180
10	7,5	**12**	9	**132**	**4**	258	132	–	–	–	330	631	–	–	631	–	–	200
12.5	9,2	**15**	11	**132**	**4**	258	132	–	–	–	440	678	724	–	669	–	–	220
15	11	**18**	13,2	**160**	**4**	314	160	427	320	160	440	793	839	–	793	839	–	265
20	15	**24**	18	**160**	**4**	314	160	427	320	160	440	793	839	–	793	839	–	290
25	18,5	**30**	22,2	**180**	**4**	314	180	427	320	160	440	793	860	–	793	860	–	310
30	22	**36**	26,4	**180**	**4**	354	180	427	320	160	440	868	935	–	868	935	–	375
40	30	**48**	36	**200**	**4**	354	200	427	393	160	440	898	958	–	898	958	–	440
50	37	**60**	44,4	**225**	**4**	411	225	474	393	160	440	975	1 035	–	975	1 035	–	575
60	45	**72**	54	**225**	**4**	411	225	502	393	190	560	1 033	1 101	1 149	1 033	1 101	1 149	860
75	55	**90**	44,4	**250**	**4**	411	250	502	393	190	560	1 033	1 101	1 149	1 033	1 101	1 149	925
100	75	**125**	90	**280**	**4**	490	280	568	412	190	560	1 181	1 261	1 341	1 181	1 261	1 341	1300
125	90	**150**	108	**280**	**4**	490	280	568	412	190	560	1 181	1 261	1 341	1 181	1 261	1 341	1455
150	110	**180**	132	**315**	**4**	490	315	642	542	190	660	1 181	1 261	1 341	1 181	1 261	1 341	1650
180	132	**216**	158	**315**	**4**	604	315	642	542	190	660	1 324	1 404	1 484	1 324	1 404	1 484	2315
220	160	**264**	192	**315**	**4**	604	315	642	542	240	660	1 395	1 495	1 585	1 395	1 495	1 588	2645
270	200	**324**	240	**315**	**4**	604	315	642	542	240	660	1 495	1 595	1 685	1 495	1 595	1 685	2980
340	250	**408**	300	**355**	**4**	770	355	642	542	240	820	1 803	1 903	1 993	1 803	1 903	1 993	4630
425	315	**510**	378	**355**	**4**	770	355	–	–	–	820	1 803	1 903	1 993	1 803	1 903	1 993	4630
480	355	**576**	426	**355**	**4**	770	355	–	–	–	820	2 024	2 142	2 241	2 024	2 142	2 241	5400
540	400	**648**	480	**355**	**4**	770	355	–	–	–	820	2 024	2 142	2 241	2 024	2 142	2 241	5735
610	450	**732**	540	**355**	**4**	770	355	–	–	–	820	2 024	2 142	2 241	2 024	2 142	2 241	5955
680	500	**816**	600	**355**	**4**	770	355	–	–	–	820	2 024	2 142	2 241	2 024	2 142	2 241	6065
760	560	**912**	672	**400**	**4**	850	400	–	–	–	1 050	2 288	2 406	2 505	2 259	2 377	2 476	6835

6 poles with hydraulic coupling

P_N 50 Hz hp	P_N 50 Hz kW	P_N 60 Hz hp	P_N 60 Hz kW	Motor		AC Ø ~	H 2)	M	N	O	U	L ~ KR... 50 Hz	L ~ CKR... 50 Hz	L ~ CCKR... 50 Hz	L ~ KR... 60 Hz	L ~ CKR... 60 Hz	L ~ CCKR... 60 Hz	Mass lb 1)
5.5	4	**6.6**	4,8	**132**	**6**	258	132	–	–	–	440	640	686	–	640	686	–	220
7.5	5,5	**9**	6,6	**132**	**6**	258	132	–	–	–	440	678	745	–	678	724	–	245
10	7,5	**12**	9	**160**	**6**	314	160	427	320	160	440	793	860	–	793	860	–	245
15	11	**18**	13,2	**160**	**6**	314	160	427	320	160	440	823	883	–	823	883	–	310
20	15	**24**	18	**180**	**6**	354	180	474	393	160	560	956	1 024	1 072	898	958	–	550
30	22	**36**	26,4	**200**	**6**	354	200	474	393	160	560	956	1 024	1 072	956	1 024	1 072	640
40	30	**48**	36	**225**	**6**	411	225	568	412	190	560	1 052	1 132	1 212	1 052	1 132	1 212	970
50	37	**60**	44,4	**250**	**6**	411	250	568	412	190	660	1 052	1 132	1 212	1 052	1 132	1 212	1080
60	45	**72**	54	**280**	**6**	490	280	568	412	190	660	1 181	1 261	1 341	1 181	1 261	1 341	1215
75	55	**90**	66	**280**	**6**	490	280	642	542	190	660	1 252	1 352	1 442	1 181	1 261	1 341	1545
100	75	**120**	90	**315**	**6**	490	315	642	542	190	660	1 252	1 352	1 442	1 252	1 352	1 442	1720
125	90	**150**	108	**315**	**6**	604	315	642	542	190	820	1 395	1 495	1 585	1 395	1 495	1 585	2315
180	132	**216**	158	**315**	**6**	604	315	642	542	240	820	1 395	1 495	1 585	1 395	1 495	1 585	2760
220	160	**264**	192	**315**	**6**	604	315	642	542	–	820	1 551	1 669	1 768	1 495	1 595	1 685	3200
270	200	**324**	240	**355**	**6**	770	355	–	–	–	1 050	1 853	1 971	2 070	1 824	1 942	2 041	4520
340	250	**408**	300	**355**	**6**	770	355	–	–	–	1 050	1 853	1 971	2 070	1 853	1 971	2 070	5070
425	315	**510**	378	**355**	**6**	770	355	–	–	–	1 050	2 053	2 171	2 270	2 053	2 171	2 270	5955
480	355	**576**	426	**355**	**6**	770	355	–	–	–	1 050	2 053	2 171	2 270	2 053	2 171	2 270	6175
540	400	**648**	480	**400**	**6**	850	400	–	–	–	1 050	2 408	2 519	2 628	2 408	2 519	2 628	7275
610	450	**732**	540	**400**	**6**	850	400	–	–	–	1 050	2 408	2 519	2 628	2 408	2 519	2 628	7610
680	500	**816**	600	**400**	**6**	850	400	–	–	–	1 050	2 408	2 519	2 628	2 408	2 519	2 628	8050

1) Masses are indicative. In order to obtain the total mass of the drive unit add the mass relative to the gear reducer sub-group.
2) Tolerance: up to size 250 $_{-0,5}^{0}$ mm, for sizes > 280 $_{-1}^{0}$ mm.

Dimensions and masses - **Gear reducer sub-group**

R CI 140 ... 360

With **flexible coupling**[1)]

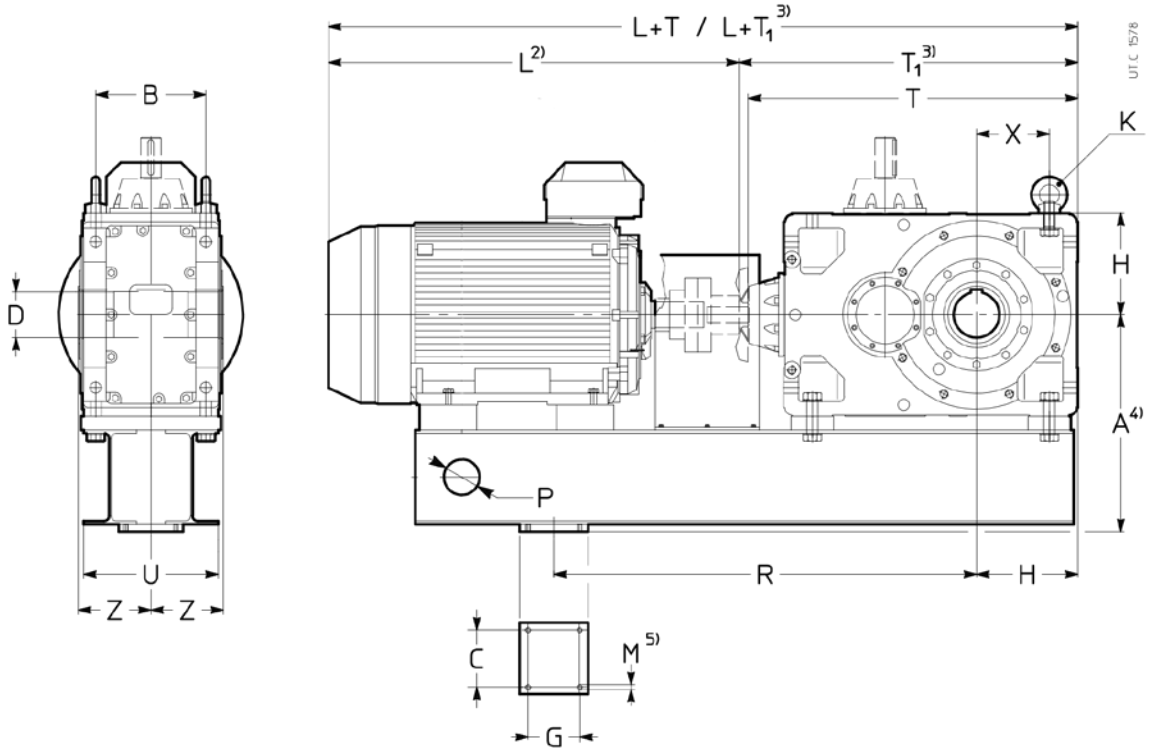

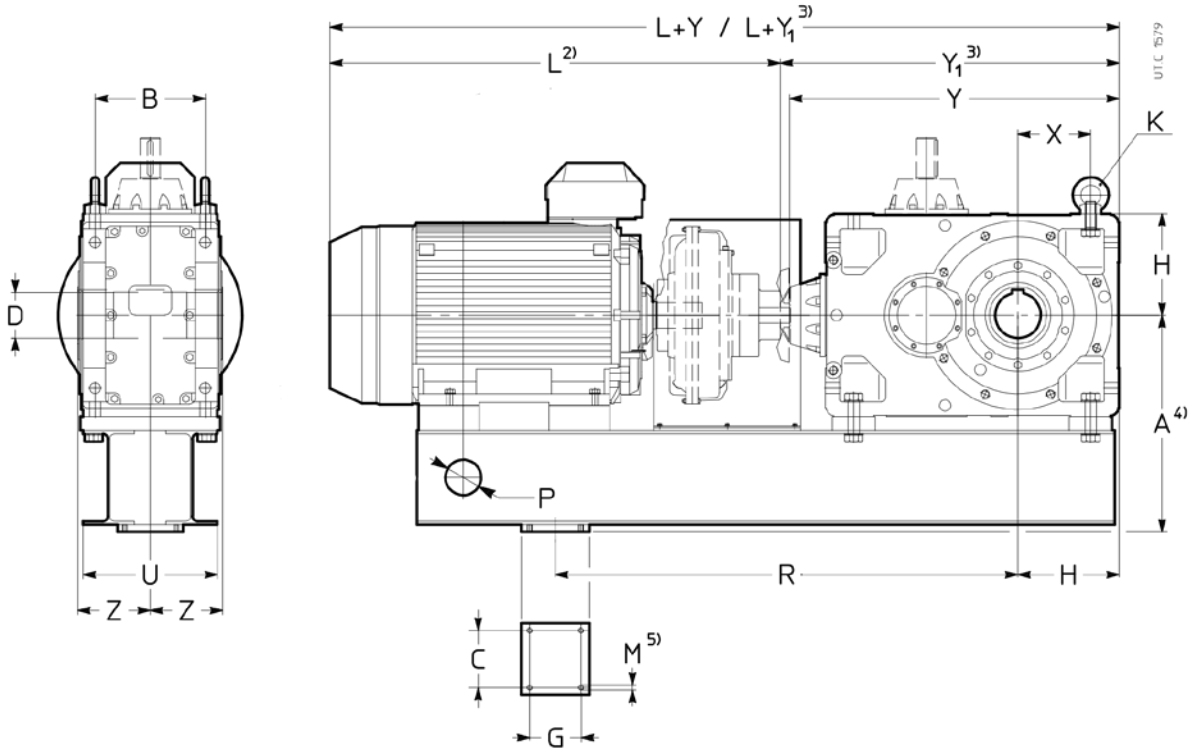

Dimensions and masses - Gear reducer sub-group

R CI 140 ... 360

Size Gear	Mot. B3	A 4)	B C	D Ø H7	G	H H11 K DIN 582	M 5)	P Ø R	U X	Z 6)	T	T1 3)	T	T1 3)	T	T1 3)	Y	Y1 3)	Y	Y1 3)	Y	Y1 3)	Mass lb 7)
											$i_N \leq 9$		$i_N = 10 ... 16$		$i_N \geq 18$		$i_N \leq 9$		$i_N = 10 ... 16$		$i_N \geq 18$		
140	160	339	162	70	160	150	M16	48	120	125	–	–	478	–	478	–	–	–	478	–	478	–	377
	180		70			M16		700	106		492	507	478	–	478	–	492	507	478	–	478	–	400
	200	359									492	507	478	–	–	–	492	507	478	–	–	–	400
	225	384									492	507	478	–	–	–	492	507	478	–	–	–	410
											$i_N \leq 8$		$i_N = 9 ... 16$		$i_N \geq 18$		$i_N \leq 8$		$i_N = 9 ... 16$		$i_N \geq 18$		
160	132	374	201	80	160	180	M16	60	150	136	–	–	–	–	576	–	–	–	–	–	566	–	580
	160		100			M20		900	126		–	–	–	–	576	–	–	–	–	–	566	–	602
	180										–	–	566	581	566	–	–	–	566	581	566	–	634
	200	394									–	–	566	581	566	–	–	–	566	581	566	–	635
	225	419									606	606	566	581	–	–	616	616	566	581	–	–	657
	250	444									606	606	566	581	–	–	586	606	566	581	–	–	668
	280	474									596	606	566	581	–	–	586	606	566	581	–	–	703
											$i_N \leq 9$		$i_N = 10 ... 16$		$i_N \geq 18$		$i_N \leq 9$		$i_N = 10 ... 16$		$i_N \geq 18$		
180	180	419	201	90	160	180	M16	60	150	150	–	–	586	601	586	–	–	–	586	601	586	–	688
	200		100			M20		900	126		–	–	586	601	586	–	–	–	586	601	586	–	688
	225										626	626	586	601	586	–	606	626	586	601	586	–	710
	250	444									626	626	586	601	–	–	606	626	586	601	–	–	750
	280	474									616	626	586	601	–	–	606	626	586	601	–	–	795
											$i_N \leq 8$		$i_N = 9 ... 16$		$i_N \geq 18$		$i_N \leq 8$		$i_N = 9 ... 16$		$i_N \geq 18$		
200	160	454	250	100	190	225	M16	80	180	167	–	–	–	–	717	–	–	–	–	–	707	–	963
	180		130			M24		1 100	160		–	–	–	–	707	–	–	–	–	–	707	–	1000
	200										–	–	–	–	707	–	–	–	–	–	707	–	1000
	225										–	–	727	727	707	–	–	–	737	737	707	–	1027
	250	479									–	–	727	727	707	–	–	–	707	727	707	–	1038
	280	509									740	750	717	727	707	–	730	750	707	727	707	–	1090
	315	544									730	750	707	727	–	–	730	750	707	727	–	–	1168
											$i_N \leq 9$		$i_N = 10 ... 16$		$i_N \geq 18$		$i_N \leq 9$		$i_N = 10 ... 16$		$i_N \geq 18$		
225	225	509	250	110	190	225	M16	80	180	180	–	–	–	–	732	–	–	–	–	–	732	–	1118
	250		130			M24		1 100	160		–	–	752	752	732	–	–	–	732	752	732	–	1138
	280										765	775	742	752	732	–	755	775	732	752	732	–	1186
	315	544									755	775	732	752	–	–	755	775	732	752	–	–	1265
											$i_N \leq 10$		$i_N = 11,2 ... 16$		$i_N \geq 18$		$i_N \leq 10$		$i_N = 11,2 ... 16$		$i_N \geq 18$		
250	180	600	310	125	230	280	M20	100	380	206	–	–	–	–	917	917	–	–	–	–	917	917	1705
	200		250			M30		1 300	198		–	–	–	–	907	907	–	–	–	–	917	917	1705
	225										–	–	–	–	907	907	–	–	–	–	917	917	1733
	250										–	–	–	–	907	907	–	–	–	–	887	907	1750
	280										–	–	897	912	897	907	–	–	887	912	887	907	1817
	315	635									930	935	887	912	887	907	940	940	887	912	887	907	1940
	355	675									920	935	–	–	–	–	910	935	–	–	–	–	2030
											$i_N \leq 11,5$		$i_N = 12,5 ... 16$		$i_N \geq 18$		$i_N \leq 11,5$		$i_N = 12,5 ... 16$		$i_N \geq 18$		
280	280	675	310	140	230	280	M20	100	380	222	–	–	–	–	927	937	–	–	–	–	917	937	1987
	315		250			M30		1 300	198		960	965	917	942	917	937	940	965	917	942	917	937	2110
	355										950	965	–	–	–	–	940	965	–	–	–	–	2200
											$i_N \leq 10$		$i_N = 11,2 ... 16$		$i_N \geq 18$		$i_N \leq 10$		$i_N = 11,2 ... 16$		$i_N \geq 18$		
320	315	755	386	160	230	355	M20	100	450	254	1 195	1 195	1 175	1 187	1 175	1 187	1 185	1 187	1 185	1 187	1 185	1 187	3153
321	355		250			M36		1 600	255		1 175	1 187	1 165	1 187	1 165	1 187	1 185	1 187	1 155	1 187	1 155	1 187	3270
											$i_N \leq 11,5$		$i_N = 12,5 ... 16$		$i_N \geq 18$		$i_N \leq 11,5$		$i_N = 12,5 ... 16$		$i_N \geq 18$		
360	315	850	386	180	230	355	M20	100	450	273	–	–	1 215	1 227	1 215	1 227	–	–	1 195	1 227	1 195	1 227	3460
	355		250			M36		1 600	255		1 235	1 235	1 205	1 227	1 205	1 227	1 225	1 227	1 195	1 227	1 195	1 227	3576

1) Dimensions are valid also with shoe brake.
2) For L dimension see page 461 (motor subground).
3) With fan cooling.
4) Dimensions to be checked at page 468 according to train of gear and power supply.
5) Working length of thread 2·M.
6) In case of seals protected with labyrinth cover and greaser Z dimensions can be increased up to 15 mm, according to gea reducer size, consult us.
7) Masses are indicative. In order to obtain the total mass of the drive unit add the mass relative to the motor sub-group.

Dimensions and masses - Gear reducer sub-group

R C2I 140 ... 360

With **flexible coupling**[1)]

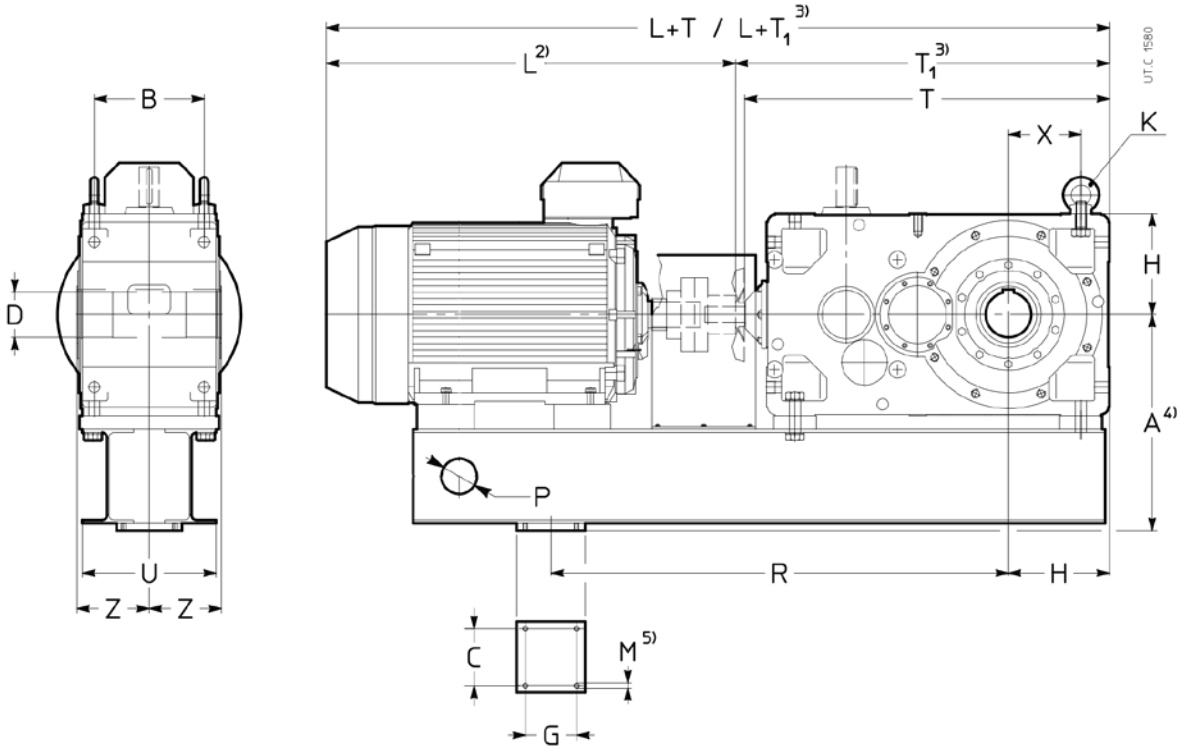

With **hydraulic coupling**[1)]

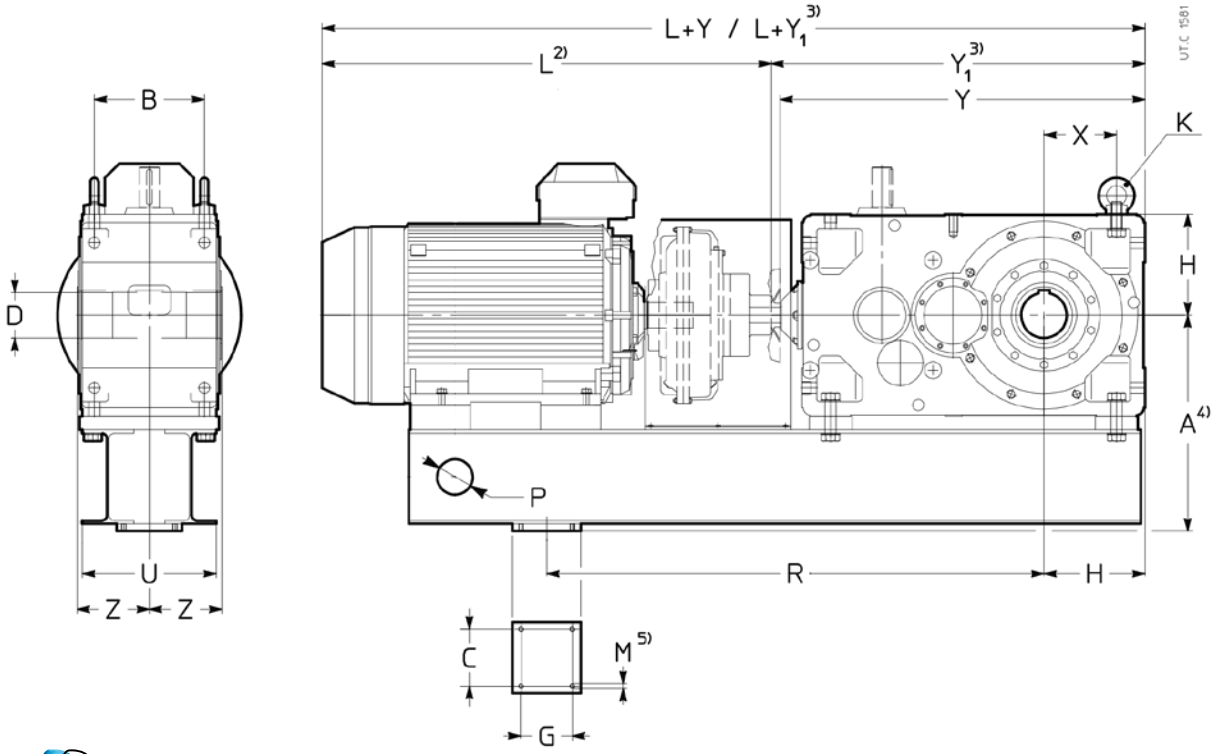

Dimensions and masses - Gear reducer sub-group

R C2I 140 ... 360

Size Gear	Mot. B3	A 4)	B C	D H7 Ø	G	H H11 K DIN 582	M 5)	P Ø R	U X	Z 6)	T $i_N \leq 31,5$	T_1 3)	T $i_N = 35,5 ... 63$	T_1 3)	T $i_N \geq 71$	T_1 3)	Y $i_N \leq 31,5$	Y_1 3)	Y $i_N = 35,5 ... 63$	Y_1 3)	Y $i_N \geq 71$	Y_1 3)	Mass lb 7)
140	132	309	162	70	160	150	M16	48	120	125	–	558	547	–	547	–	558	–	547	–	547	–	393
	160	319	70			M16		700	106		–	558	547	–	–	–	558	–	547	–	–	–	405
	180	339									–	558	–	–	–	–	558	–	–	–	–	–	425
160	132	374	201	80	160	180	M16	60	150	136	–	–	653	–	653	–	–	–	653	–	653	–	649
	160		100			M20		900	126		677	682	653	–	–	–	667	682	653	–	–	–	677
	180										667	682	653	–	–	–	667	682	653	–	–	–	705
	200	394									667	682	–	–	–	–	667	682	–	–	–	–	705
180	132	374	201	90	160	180	M16	60	150	150	–	–	673	–	673	–	–	–	673	–	673	–	693
	160		100			M20		900	123		697	702	673	–	673	–	687	702	673	–	673	–	719
	180										687	702	673	–	–	–	687	702	673	–	–	–	750
	200	394									687	702	673	–	–	–	687	702	673	–	–	–	750
	225	419									687	702	–	–	–	–	687	702	–	–	–	–	768
200	132	454	250	100	190	225	M16	80	180	167	–	–	–	–	821	–	–	–	–	–	811	–	1045
	160		130			M24		1100	160		–	–	821	–	821	–	–	–	811	–	811	–	1074
	180										861	–	811	–	811	–	861	861	811	–	811	–	1120
	200										851	–	811	–	–	–	861	861	811	–	–	–	1120
	225										851	–	811	–	–	–	861	861	811	–	–	–	1142
	250	479									851	–	–	–	–	–	831	851	–	–	–	–	1153
	280	509									841	–	–	–	–	–	831	851	–	–	–	–	1197
225	132	454	250	110	190	225	M16	80	180	167	–	–	–	–	846	–	–	–	–	–	836	–	1120
	160		130			M24		1100	160		–	–	846	–	846	–	–	–	836	–	836	–	1146
	180										–	–	836	–	836	–	–	–	836	–	836	–	1184
	200										876	876	836	–	836	–	886	886	836	–	836	–	1195
	225										876	876	836	–	–	–	886	886	836	–	–	–	1215
	250	479									876	876	836	–	–	–	856	876	836	–	–	–	1228
	280	509									866	876	–	–	–	–	856	876	–	–	–	–	1272
250	132	600	310	125	230	280	M20	100	380	206	–	–	–	–	1 022	–	–	–	–	–	1 012	–	1792
	160		250			M30		1300	198		–	–	–	–	1 022	–	–	–	–	–	1 012	–	1832
	180										–	–	1 042	–	1 012	–	–	–	1 042	–	1 012	–	1894
	200										–	–	1 032	–	1 012	–	–	–	1 042	–	1 012	–	1894
	225										1 055	1 055	1 032	–	1 012	–	1 035	1 055	1 042	–	1 012	–	1927
	250										1 055	1 055	1 032	–	–	–	1 035	1 055	1 012	–	–	–	1947
	280										1 045	1 055	1 022	–	–	–	1 035	1 055	1 012	–	–	–	2013
	315	635									1 035	1 055	–	–	–	–	1 035	1 055	–	–	–	–	2127
280	160	600	310	140	230	280	M20	100	380	222	–	–	–	–	1 052	–	–	–	–	–	1 042	–	1962
	180		250			M30		1300	198		–	–	–	–	1 042	–	–	–	–	–	1 042	–	2015
	200										–	–	1 062	1 062	1 042	–	–	–	1 072	1 072	1 042	–	2024
	225										–	–	1 062	1 062	1 042	–	–	–	1 072	1 072	1 042	–	2055
	250										1 085	1 085	1 062	1 062	1 042	–	1 065	1 085	1 042	1 062	1 042	–	2079
	280										1 075	1 085	1 052	1 052	–	–	1 065	1 085	1 042	1 062	–	–	2145
	315	635									1 065	1 085	1 042	1 062	–	–	1 065	1 085	1 042	1 062	–	–	2258
320	160	755	386	160	230	355	M20	100	450	254	–	–	–	–	1 322	–	–	–	–	–	1 312	–	3082
321	180		250			M36		1600	255		–	–	–	–	1 312	–	–	–	–	–	1 312	–	3150
	200										–	–	–	–	1 302	–	–	–	–	–	1 312	–	3150
	225										–	–	1 302	1 307	1 302	–	–	–	1 282	1 307	1 312	–	3186
	250										–	–	1 302	1 307	1 302	–	–	–	1 282	1 307	1 282	–	3212
	280										1 345	1 345	1 292	1 307	1 292	–	1 335	1 337	1 282	1 307	1 282	–	3311
	315										1 325	1 337	1 282	1 307	–	–	1 335	1 337	1 282	1 307	–	–	3457
	355										1 315	1 337	–	–	–	–	1 305	1 337	–	–	–	–	3576
360	180	755	386	180	230	355	M20	100	450	273	–	–	–	–	1 352	–	–	–	–	–	1 352	–	3377
	200		250			M36		1600	255		–	–	–	–	1 342	–	–	–	–	–	1 352	–	3377
	225										–	–	–	–	1 342	–	–	–	–	–	1 352	–	3415
	250										–	–	1 342	1 347	1 342	–	–	–	1 322	1 347	1 322	–	3439
	280										–	–	1 332	1 347	1 332	–	–	–	1 322	1 347	1 322	–	3525
	315										1 365	1 377	1 322	1 347	1 322	–	1 375	1 377	1 322	1 347	1 322	–	3684
	355										1 355	1 377	–	–	–	–	1 345	1 377	–	–	–	–	3801

1) Dimensions are valid also with shoe brake.
2) For L dimension see page 461 (motor sub-group).
3) With fan cooling.
4) Dimensions to be checked at page 468 according to train of gear and power supply.
5) Working length of thread 2·M.
6) In case of seals protected with labyrinth cover and greaser Z dimensions can be increased up to 15 mm, according to gear reducer size, consult us.
7) Masses are indicative. In order to obtain the total mass of the drive unit add the mass relative to the motor sub-group.

Dimensions and masses

A dimension for particular cases

The following tables show - according to the gear reducer train of gear, the motor number of poles and the nominal supply frequency - the change in A dimensions caused by the choice of hydraulic coupling different from that given in the tables of pages 465 to 467.

CI - 50 Hz

Size		A
Gear	Mot. B3	
140	160 6	350
	180 6	380
	200 6	380
	225 6	410
160	180 6	410
	200 6	410
	225 6	440
	250 6	460
	280 6	490
180	225 6	440
	250 6	460
	280 6	490
200	225 6	470
	250 6	490
	280 6	520
	315 6	570
	315 6	610
225	280 6	520
	315 6	570
	315 6	610
250	355 4	690
	315 6	660
	315 6	690
	355 6	730
280	355 4	690
	315 6	690
	355 6	730
320	355 6	800
400	400 6	940

CI - 60 Hz

Size		A
Gear	Mot. B3	
140	160 6	350
	180 6	350
	200 6	380
	225 6	410
160	200 6	410
	225 6	440
180	225 6	440
200	225 6	470
	315 6	570
225	315 6	570
250	355 4	690
	315 6	660
	355 6	690
	355 6	730
280	355 4	690
	355 6	690
	355 6	730
320	355 6	800
400	400 6	940

C2I - 50 Hz

Size		A
Gear	Mot. B3	
140	132 6	335
	160 6	335
	160 6	350
	180 6	380
160	160 6	380
	180 6	410
	200 6	410
180	160 6	380
	180 6	410
	200 6	410
	225 6	440
200	225 6	470
	250 6	490
	280 6	520
225	225 6	470
	250 6	490
	280 6	520
250	280 6	610
	315 6	660
280	280 6	610
	315 6	660
	315 6	690
320	355 6	800
360	355 6	800

C2I - 60 Hz

Size		A
Gear	Mot. B3	
140	160 6	335
	160 6	350
	180 6	350
160	160 6	380
	180 6	380
	200 6	410
180	160 6	380
	180 6	380
	200 6	410
	225 6	440
200	225 6	470
225	225 6	470
250	315 6	660
280	315 6	660
320	355 6	800
360	355 6	800

Accessories

Reaction point with elastic bush

Before mounting accurately clean the mating surfaces and provide a roughness sufficiently high to ensure a proper friction coefficient; if necessary, remove by a scraper or solvent the possible paint from the mating surfaces.

Fasten the screws with a dynamometric wrench to the tightening torque given in the table; check the tightening torque after the first running period and then at regular intervals.

It is recommended to use locking adhesives (such as LOCTITE) on the fastening screws and mating surfaces.

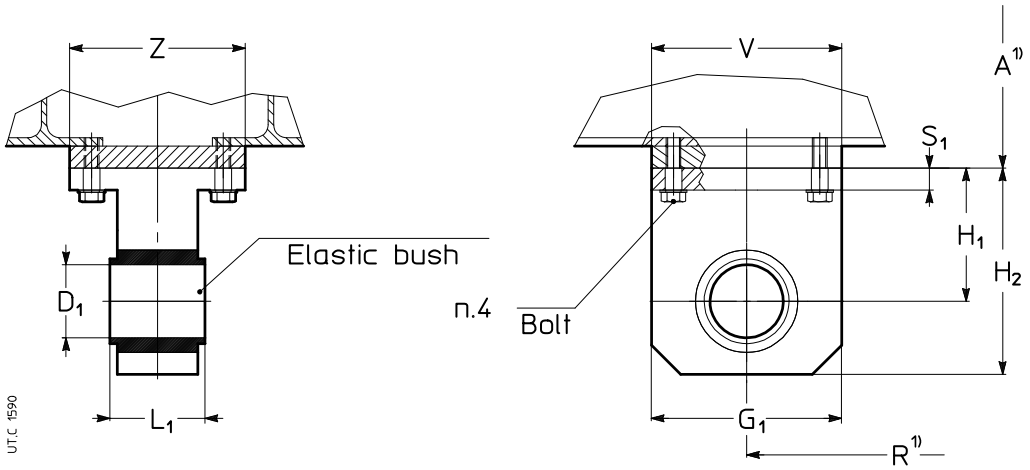

Size	G_1	H_1	H_2	D_1 H9	L_1 ± 0,5	S_1	V	Z	Bolt DIN 933 8.8	Ts 2) lb in
140	100	80	130	40	88	17	200	130	M16	1810
160, 180	100	80	130	40	88	17	200	140	M16	1810
200, 225	125	95	157,5	50	110	17	230	170	M16	1810
250... 360	250	165	290	100	120	22	280	300	M20	3540

1) For A dimensions see tables at pages 465 and 467.
2) Tightening torque.

Installation and maintenance

The drive unit is supplied complete with the relevant Installation and Maintenance Instructions for all the components of the drive unit.

Gear reducer are supplied without oil. For quantities and type of oil, as well as oil change intervals, please follow the relative catalog instructions or in the gear reducers Installation and Maintenance manual.

Hydraulic couplings are supplied without oil. For quantities and type of oil please follow the relevant catalog instructions or in the specific Installation and Maintenance manual.

Lifting

Lift the drive unit through the lifting points as shown on fig. 1a, using chains or lifting streps.

The drive unit is supplied including no.2 lifting lugs fitted on the gear reducer, while the lifting bar is up to Customer.

We strongly recommend to size the lifting tools with a safety margin of 25% with respect to the total mass given on the catalog and/or on the nameplate of the drive unit.

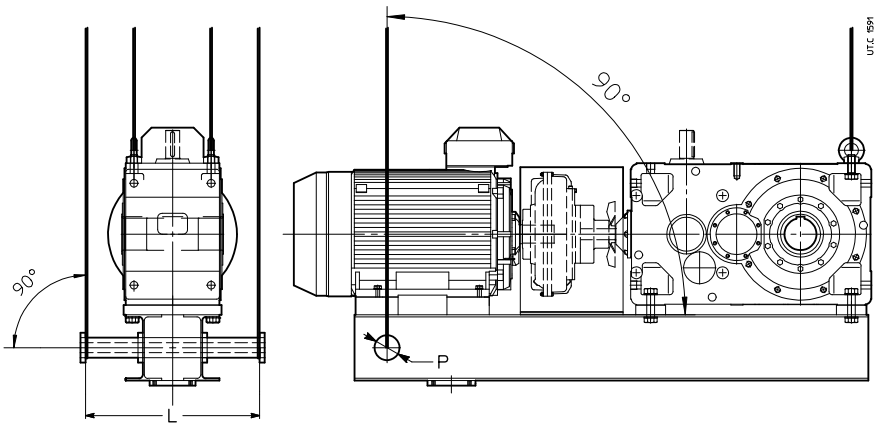

Size	L	P Ø
140	500	48
160, 180	650	60
200, 225	700	80
250 ... 360	850	100

Fig. 1a - **Right** way of lifting

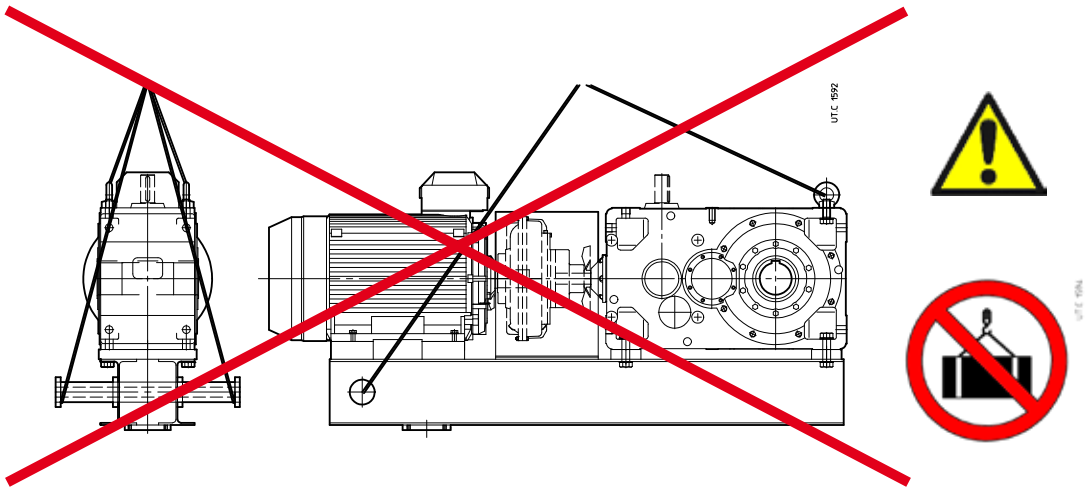

Fig. 1b - **Wrong** way of lifting

Miscellaneous

Drive unit with:

- **Special painting** for hard ambient conditions,consult us
- **Torque arm**: features and dimensions to be agreed with the Customer
- Gearmotor arrangements made by means of **bell housing and elastic coupling** are available for all gearbox sizes
- **Emergency units** including auxiliary drives connected to the main drive unit
  Different types of gear units can be used as auxiliary drive and connected directly to the main drive through a freewheel or an overrunning clutch which allows to keep the second drive idle during normal running
- **External belt drives**, together with motor support
- **Electromagnetic clutch**
- **Positive brakes**
- **All-steel couplings**
- **Gear couplings**, standard or disengageable type
- Torque limiters
- **Arrangement according to ATEX II 2GD and 3GD**, with necessary accessories for control and setting
- **Swing base for fixing to ground**

Blank page

Technical formulae

Main formulae concerning mechanical drives, according to the Technical System and International Unit System (SI).

Size	With Technical System units	With SI units
starting or stopping **time** as a function of an acceleration or deceleration, of a starting or braking torque	$t = \frac{v}{a}$ [s] $t = \frac{Gd^2 \cdot n}{375 \cdot M}$ [s]	$t = \frac{J \cdot \omega}{M}$ [s]
velocity in rotary motion	$v = \frac{\pi \cdot d \cdot n}{60} = \frac{d \cdot n}{19,1}$ [m/s]	$v = \omega \cdot r$ [m/s]
speed	$n = \frac{60 \cdot v}{\pi \cdot d} = \frac{19,1 \cdot v}{d}$ [min^{-1}]	$\omega = \frac{v}{r}$ [rad/s]
acceleration or deceleration as a function of starting or stopping time	$a = \frac{v}{t}$ [m/s^2]	
angular acceleration or deceleration as a function of a starting or stopping time, of a starting or braking torque	$\alpha = \frac{n}{9,55 \cdot t}$ [rad/s^2] $\alpha = \frac{39,2 \cdot M}{Gd^2}$ [rad/s^2]	$\alpha = \frac{\omega}{t}$ [rad/s^2] $\alpha = \frac{M}{J}$ [rad/s^2]
starting or stopping **distance** as a function of a starting or stopping time, of a starting or braking velocity	$s = \frac{v \cdot t}{2}$ [m]	$s = \frac{a \cdot t^2}{2}$ [m]
starting or stopping **angle** as a function of an angular acceleration or deceleration, of a final or initial angular velocity	$\varphi = \frac{\alpha \cdot t^2}{2}$ [rad] $\varphi = \frac{n \cdot t}{19,1}$ [rad]	$\varphi = \frac{\omega \cdot t}{2}$ [rad]
mass	$m = \frac{G}{g}$ [$\frac{kgf\ s^2}{m}$]	m is the unit of mass [kg]
weight (weight force)	G is the unit of weight (weight force) [kgf]	$G = m \cdot g$ [N]
force in vertical (lifting), horizontal, inclined motion of translation (μ = coefficient of friction; φ = angle of inclination)	$F = G$ [kgf] $F = \mu \cdot G$ [kgf] $F = G (\mu \cdot \cos \varphi + \text{sen}\ \varphi)$ [kgf]	$F = m \cdot g$ [N] $F = \mu \cdot m \cdot g$ [N] $F = m \cdot g (\mu \cdot \cos \varphi + \text{sen}\ \varphi)$ [N]
dynamic moment Gd^2, moment of inertia J due to a motion of translation (numerically $J = \frac{Gd^2}{4}$)	$Gd^2 = \frac{365 \cdot G \cdot v^2}{n^2}$ [kgf m^2]	$J = \frac{m \cdot v^2}{\omega^2}$ [kg m^2]
torque as a function of a force, of a dynamic moment or of a moment of inertia, of a power	$M = \frac{F \cdot d}{2}$ [kgf m] $M = \frac{Gd^2 \cdot n}{375 \cdot t}$ [kgf m] $M = \frac{716 \cdot P}{n}$ [kgf m]	$M = F \cdot r$ [N m] $M = \frac{J \cdot \omega}{t}$ [N m] $M = \frac{P}{\omega}$ [N m]
work, energy in motion of translation, in rotary motion	$W = \frac{G \cdot v^2}{19,6}$ [kgf m] $W = \frac{Gd^2 \cdot n^2}{7160}$ [kgf m]	$W = \frac{m \cdot v^2}{2}$ [J] $W = \frac{J \cdot \omega^2}{2}$ [J]
power in motion of translation, in rotary motion	$P = \frac{F \cdot v}{75}$ [CV] $P = \frac{M \cdot n}{716}$ [CV]	$P = F \cdot v$ [W] $P = M \cdot \omega$ [W]
power available at the shaft of a single-phase motor (cos φ = power factor)	$P = \frac{U \cdot I \cdot \eta \cdot \cos \varphi}{736}$ [CV]	$P = U \cdot I \cdot \eta \cdot \cos \varphi$ [W]
power available at the shaft of a three-phase motor	$P = \frac{U \cdot I \cdot \eta \cdot \cos \varphi}{425}$ [CV]	$P = 1,73 \cdot U \cdot I \cdot \eta \cdot \cos \varphi$ [W]

Note. Acceleration or deceleration are understood constant; motion of translation and rotary motion are understood rectilinear and circular respectively.

Global presence local service

Local support
Sales, customer service,
technical support, spare parts

17 branches*

Worldwide distribution network*

A global network of subsidiaries and dealers. From design and execution to after-sales service. Rossi is always close to you: a local, reliable and flexible partner.

Alongside our 24/7 **Rossi for You** portal you have a suite of digital support tools enabling real time access to your order tracking, invoices, spare part tables download and contact to our service.

*All contacts available on **www.rossi.com**

Main offices | Affiliated companies | Production facilities/Assembly plants

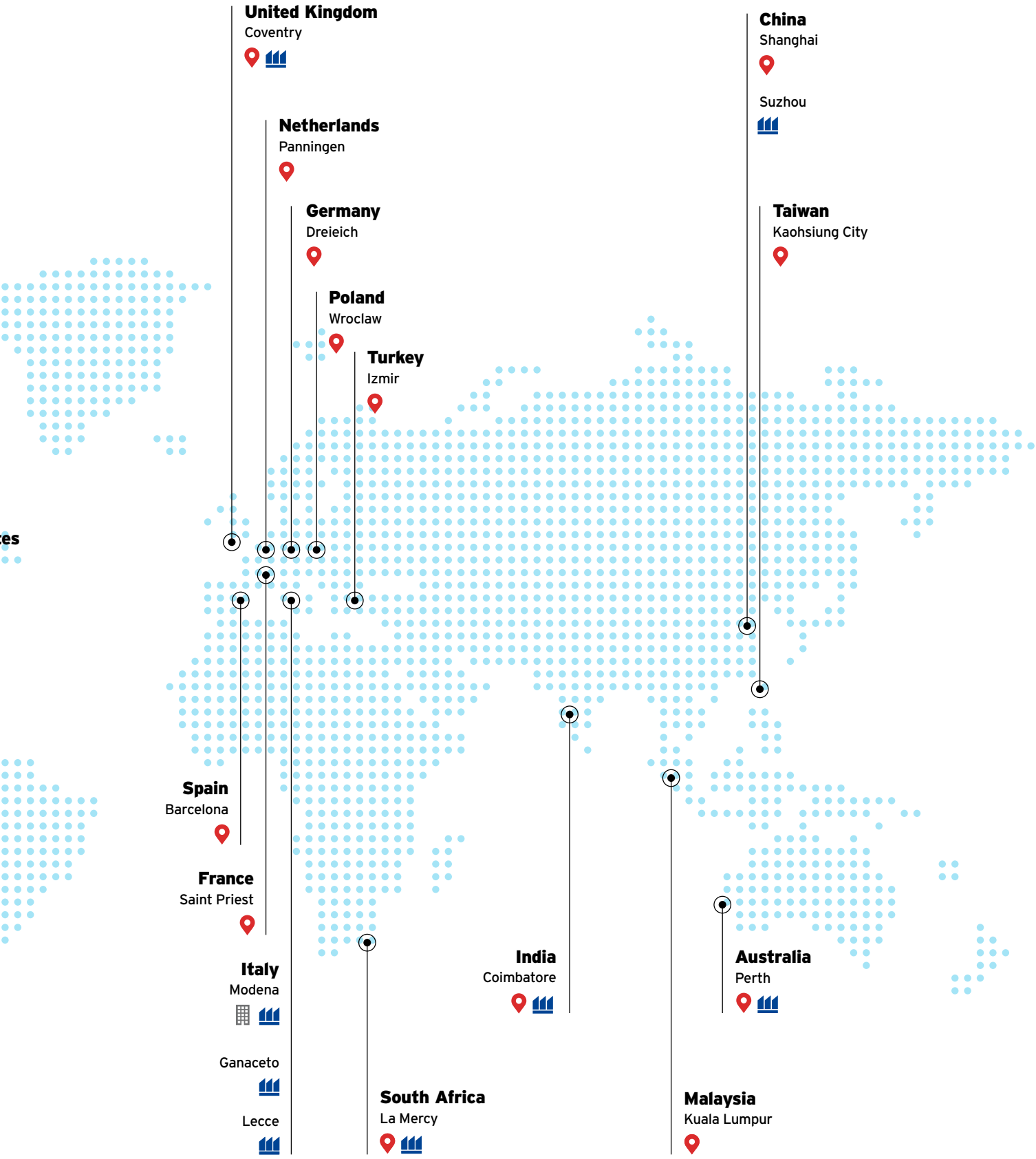

Blank page

Index of revisions

LIst of main updatings - G Edition 2590-02.00

Added former catalogs:
G Addition (sizes 400, 401)
RE drive units on swing base for the contents relevant to G drives

Added the "long version" for sizes 80, 81 MR 2I and 3I

Updating of table on page 397

Updating of page 351

Notes

Notes

Notes

Notes

Notes

Solutions for
an evolving
industry

HEADQUARTERS

Rossi S.p.A.
Via Emilia Ovest 915/A
41123 Modena - Italy

info@rossi.com
www.rossi.com

Rossi North America
3355 Martin Farm Road Suite #400
Suwanee, GA 30024 - United States

Phone +1 800 931 2044 - Fax 678-288-3658

info@rossi.com/northamerica
www.rossi.com/northamerica

2634-24.06-US

© Rossi S.p.A. Rossi reserves the right to make any modification whenever to this publication contents. The information given in this document only contains general descriptions and/or performance features which may not always specifically reflect those described.

The Customer is responsible for the correct selection and application of product in view of its industrial and/or commercial needs, unless the use has been recommended by technical qualified personnel of Rossi, who were duly informed about Customer's application purposes. In this case all the necessary data required for the selection shall be communicated exactly and in writing by the Customer, stated in the order and confirmed by Rossi. The Customer is always responsible for the safety of product applications. Every care has been taken in the drawing up of the catalog to ensure the accuracy of the information contained in this publication, however Rossi can accept no responsibility for any errors, omissions or outdated data. Due to the constant evolution of the state of the art, Rossi reserves the right to make any modification whenever to this publication contents. The responsibility for the product selection is of the Customer, excluding different agreements duly legalized in writing and undersigned by the Parties.